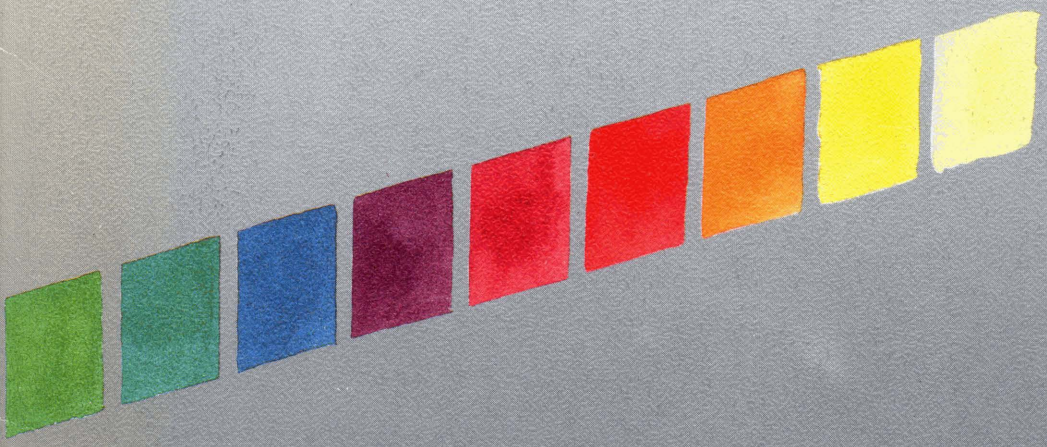

SINTRAN III
Release Info.
L-version

ND-860230.6 EN

Norsk Data

SINTRAN III
Release Info.
L-version

ND-860230.6 EN

NOTE:
The numbering system for Norsk Data's documentation changed in September 1988. All numbers now start with an 8. The numbering structure is therefore ND-8xxxxx.xx xx. Example: ND-863018.3A EN. Existing manuals will receive a new number if and when they are updated or revised.

The information in this manual is subject to change without notice.
Norsk Data A.S assumes no responsibility for any errors that may appear in this manual, or for the use or reliability of its software on equipment that is not furnished or supported by Norsk Data A.S.

Copyright 1989 by Norsk Data A.S

Send all documentation requests to:

Norsk Data A.S
Publication Department
P.O. Box 25 – Bogerud
N-0621 Oslo 6
NORWAY

PREFACE

S I N T R A N I I I / V S X

V E R S I O N L

Keywords for SINTRAN III L-version:

- Better reliability then the K-version
- Easier installation of a complete system
- At least same performance as the K-version
- Support of new hardware
- Better error reporting
- Better debug facilities
- Few new options and features
- Discontinuation of the VSE-version

This manual describes the changes in the L-version of SINTRAN III/VSX compared to the K-version.

TABLE OF CONTENTS

Section		Page
1	INSTALLATION	1
1.1	HARDWARE REQUIREMENTS	1
1.2	MICROPROGRAM VERSIONS FOR ND-500/5000	1
1.3	CHANGES IN HARDWARE SUPPORTED	1
1.4	CONFIGURATION	2
1.5	CHANGES IN INSTALLATION PROCEDURE	3
1.6	CHANGES TO THE HENT-MODE AND LOAD-MODE FILES	4
1.7	CHANGES TO THE NEW-SYSTEM PROGRAM	4
1.8	EXAMPLE OF INSTALLATION OF SINTRAN III/VSX	5
2	SINTRAN III COMMANDS	10
2.1	COMMANDS REMOVED	10
2.1.1	@CHANGE-BACKGROUND-SEGMENT-SIZE	10
2.1.2	@INITIALIZE-ERROR-LOG	10
2.1.3	@PRINT-ERROR-LOG	10
2.2	MODIFIED COMMANDS	10
2.2.1	@COPY	10
2.2.2	@DEVICE-FUNCTION	10
2.2.3	@MODE	10
2.2.4	@RT-PROGRAM-LOG	11
2.2.5	@START-PROGRAM-LOG	11
2.2.6	@STOP-PROGRAM-LOG	11
2.2.7	@TERMINAL-MODE	11
2.3	NEW COMMANDS	11
2.3.1	@AUTOMATIC-ND5000-ERROR-MESSAGES	11
2.3.2	@FILE-SYSTEM-ERROR-MESSAGES	12
2.3.3	@LIST-ALL-OPEN-FILES	12
2.3.4	@LIST-SERVERS	12
2.3.5	@SET-DIRECTORY-AVAILABLE	13
2.3.6	@SET-DIRECTORY-UNAVAILABLE	13
2.3.7	@START-SERVERS	13
3	MONITOR CALLS (ND-100)	14
3.1	MODIFIED MONITOR CALLS	14
3.1.1	TERMO MON 52	14
3.1.2	ABSTR MON 131	14
3.1.3	WSEG MON 164	14
3.1.4	CPUST MON 262	15
3.1.5	MLAMU MON 315	16
3.1.6	FSMTY MON 327	16
3.1.7	ADP MON 342	20
3.1.8	CONFG MON 343	20
3.2	NEW MONITOR CALLS	26
3.2.1	NUCL MON 347	26
3.2.2	RWSEG MON 350	26

Section Page

4 SINTRAN-SERVICE-PROGRAM 27

4.1 COMMANDS WHICH MAY CAUSE PROBLEMS 27
4.1.1 *STOP-XMSG 27
4.2 MODIFIED COMMANDS 27
4.2.1 *CHANGE-VARIABLE 27
4.2.2 *CREATE-SYSTEM-LAMU 27
4.2.3 *PAGES-TO-LAMU 27
4.3 NEW COMMANDS 27
4.3.1 *LAMU-CONNECTIONS 27

5 CONFIGURATION PROGRAM 28

5.1 THE UTILITY COMMANDS 28
5.2 THE SELECTION COMMANDS 29
5.3 THE DISPLAY COMMAND 40

6 FILE SYSTEM 42

7 SPOOLING 43

8 SINTRAN III L-VERSION, SYSTEM LAYOUT . . . 44

8.1 SYSTEM LAYOUT ON DISK 44
8.2 PAGE INDEX TABLE LAYOUT 45
8.3 SYSTEM INCLUDED SEGMENTS 47
8.4 SYSTEM INCLUDED RT-PROGRAMS 49

9 SECURITY PRIMITIVES 51

10 ND-500/5000 MONITOR 52

10.1 CHANGED INSTALLATION PROCEDURE 52
10.2 CONFIGURATION LIMITATIONS 52
10.3 NEW COMMANDS TO SINTRAN III AFFECTING THE ND-500/5000 52
10.3.1 @AUTOMATIC-ND5000-ERROR-MESSAGE 52
10.4 MODIFIED COMMANDS TO THE ND-500/5000 BACKGROUND MONITOR 52
10.4.1 LOOK-AT-RESIDENT-MEMORY 52
10.5 NEW COMMANDS TO THE ND-500/5000 BACKGROUND MONITOR 53
10.5.1 RESTART-PROCESS 53
10.6 MODIFIED MONITOR CALLS - ONLY AVAILABLE ON ND-500 53
10.6.1 AttachSegment MON 440 53
10.6.2 SMTRANS MON 515 53
10.7 NEW MONITOR CALLS (ND-500) 54
10.7.1 EUSEL MON 300 54
10.7.2 NUCL MON 347 54
10.7.3 RWSEG MON 350 54

Section Page

11 XMSG 55

11.1 CHANGED INSTALLATION PROCEDURE 55

12 NOTS - NET/ONE TERMINAL SERVER 56

12.1 LOGGING FACILITIES 56

13 MTAD - MAILBOX TERMINAL ACCESS DEVICE . . . 57

14 MEMTOF 58

15 NUCLEUS 59

15.1 OVERVIEW 59
15.2 NUCLEUS KERNEL 60
15.3 COMMUNICATION CONCEPTS 60
15.4 PROTECTION IN NUCLEUS 61
15.4.1 PROCESSES 61
15.4.2 RESTRICTED RESOURCES 61
15.4.3 NAMING 62
15.5 CONFIGURATION OF NUCLEUS 62
15.6 NUCLEUS IN ND-100 62
15.7 NUCLEUS IN DOMINO CONTROLLER 62
15.8 NUCLEUS LIBRARY 62
15.8.1 NKCREPORT - CREATE PORT 63
15.8.2 NKCREPORTNAME - CREATE PORT NAME 63
15.8.3 NKOPENPORT - OPEN PORT 64
15.8.4 NKOPENRETURNPORT - OPEN RETURN PORT 64
15.8.5 NKDELNAME - DELETE PORT NAME 65
15.8.6 NKCREMESSAGE - CREATE MESSAGE 65
15.8.7 NKMOVE - READ OR WRITE A MESSAGE 66
15.8.8 NKSEND - SEND MESSAGE 67
15.8.9 NKRECEIVE - RECEIVE MESSAGE 67
15.8.10 NKGETINFO - GET INFO 68
15.8.11 NKCLOSE - CLOSE PORT, MESSAGE OR SENDREFERENCE . . . 69

16 DISK MIRRORING 70

17 ERS/SINTRAN III WATCHDOG 71

17.1 GENERAL DESCRIPTION 71
17.2 REPORT LAYOUT 71

18 AFFECTED SUBSYSTEMS 72

1. INSTALLATION

1.1 HARDWARE REQUIREMENTS

SINTRAN III/VSX requires:
- ND-100/CX CPU with ECO 100-522 (48-bit floating representation)
  or ECO 100-523 (32-bit floating representation)
- Memory management II (16 PITs) with ECO 100-534 (level N)

or - ND-110 CPU (CPU and memory management on one card) (level R)
or - ND-110/CX CPU (CPU and memory management on one card) (level H)
or - ND-120/CX CPU (CPU, memory man. & memory on one card) (level G)

- if SMD disk controller (10 MHz) is used, ECO level BD is required

- if Dual Disk Channel Switch is present, ECO level H is required.

- if NUCLEUS is to be run, ND-5000

or - ND-500 model II w/ND-100 Octobus Line Driver (ND-324133, level D)
  (or ND-324118, level G.

- if DOMINO controllers are used, DOMINO Controller (5467, level A)

+ - ND-5000
+ - MF-bus controller (ND-324245, ECO level C)
or - Double-bus controller (ND-324244, ECO level E)
+ - PROM for MF-bus controller (47800, ECO level E)
or - PROM for Double-bus controller (47500, ECO level D)
+ - MFB port (ND-350161, ECO level F)
or - MPM-5 port (ND-324355, ECO level G)
+ - DOMINO PROM (73100, ECO level C)

1.2 MICROPROGRAM VERSIONS FOR ND-500/5000

The following table shows the microprogram versions required to run ND-500 and ND-5000 systems on the L-version of SINTRAN III:

ND prod.no.	System type	Microprogram version	
210786 D	ND-550/560/570	15211	
210787 D	ND-530	15311	
210701 F	ND-580	15111	
211272 C	ND-5200	11529	(or later versions: ...30, etc.)
211273 C	ND-5400	11629	
211274 C	ND-5500	11729	
211275 C	ND-5700	11829	
211276 C	ND-5800	11929	

1.3 CHANGES IN HARDWARE SUPPORTED

The "old" ND-100 CPU (the non CX-CPU) is no longer supported.

The concept of connecting the SCSI adaptor to a DOMINO controller, thus controlling the SCSI disks from the DOMINO controller rather than the ND-100, is now supported. This makes the ND-100 part of an ND-5000 system less of a bottleneck in high-volume disk I/O operations.

1.4 CONFIGURATION

The L-version of SINTRAN III/VSX is delivered as a limited number of standard versions able to support a great variety of configurations. As for the K-version, a program for handling reconfiguration is supplied. Refer to pages 28-41 for further description.

A list of options included in the SINTRAN III/VSX version K standard systems A and B is given below:

		A	B
SMD/ECC disk controllers (max. 4 units/each):		2	4
ST-506 (Winchester) disk (max. 2 units/each):		1	2
SCSI host adaptor (controller):		3	2
SCSI disk units (per system):		8	8
SCSI streamer units (per system):		2	2
SCSI magnetic tape units (per system):		3	2
SCSI optical disk units (per system):		2	2
Bootstrap driver for SMD disk controller:		Yes	Yes
Bootstrap driver for Winchester disk controller:		Yes	Yes
Bootstrap driver for SCSI disk controller:		Yes	Yes
Floppy/streamer controllers (max. 3 units/each): (both types of floppy drives supported)		2	2
Magnetic tape controllers (max. 4 units/each): (Cipher, Pertec, STC)		2	2
Terminals:		128	128
Communication:	HDLC + synchronous modem:	6	6
	HDLC interfaces:	0	6
	Synchronous modem interface:	2	2
	PICC interfaces:	4	4
	GPIB interface:	1	1
	MPM IV option:	Yes	Yes
	I/O bus extensions:	2	2
	X.21 interfaces:	2	2
	X.25 option:	Yes	Yes
	X.29 option:	Yes	Yes
	CAMAC:	0	16
	Universal DMA / Vicom interfaces:	2	6
	Fast UDMA on ND-500:	Yes	Yes
	Ethernet interfaces:	3	3
	TELEFIX:	1	1
	HASP DMA interface:	1	1
	Net/One controllers:	3	3
Line printers:	Parallel or DMA interfaces:	2	2
	Versatec printer/plotter DMA:	2	2
	Versatec printer/plotter I/O:	2	2
	Extra spooling processes:	16	10
	COSMOS spooling:	Yes	Yes

		A	B
Software options:	Terminal/TAD background tasks:	150	120
	Terminal access devices (TADs):	70	50
	Batch processes:	10	10
	Segments	500	750
	Free RT-descriptions for users:	180	150
	ND-500 processes:	128	128
	SIBAS processes:	12	12
	Semaphores:	50	50
	Internal device (byte-oriented):	30	30
	Internal device (block-oriented):	2	2
	CX-CPU:	Yes	Yes
	ND-500:	Yes	Yes
	ND-500 CPUs:	4	4
	ND-5000 CPUs:	4	4
	XMSG:	Yes	Yes
	Device buffers:	64	64
	Symbolic Debugger tasks:	32	8
	Remote file access segments:	50	32
	CONNECT-TO:	Yes	Yes
	PT and I/O accounting:	Yes	Yes
	Remote Job Entry queues:	All	All
	Logging facilities:	All	All
	RT-Common:	6	6
	TPS:	-	-
	LAMO:	Yes	Yes
	MON ADP:	Yes	Yes
	MON SMTRANS:	Yes	Yes
	Background allocation:	Yes	Yes
	Read segment:	Yes	Yes
	Disk optimization:	Yes	Yes
	Direct task:	No	Yes
	RT-programs from direct task:	0	25
	Magnetic Tape from direct task:	No	Yes
	Direct transfer on magnetic tape:	Yes	Yes
	Connect data fields:	2	16
	Fault Tolerant eXtension:	Yes	Yes
	Disk Mirroring clusters	8	8
	Paper tape punch:	Yes	Yes
	Allocated areas:	64	64
	Programmable RT-clock driver:	No	Yes
	Standard bootstrap drivers:	Yes	Yes

1.5 CHANGES IN INSTALLATION PROCEDURE

SINTRAN III/VSX version L will be delivered on 3 double-sided/double-density (8" or 5 1/4") diskettes.

Just as in the K-version, the ND-500/5000 System Monitor is installed as part of SINTRAN.

In the L-version, XMSG is now also a part of SINTRAN and is installed automatically. This means that explicit load and initialisation of XMSG must no longer be done. The S3-CONFIG program is changed to include configuration of XMSG parameters.

Further, several of the required servers are now also delivered as part of SINTRAN and installed automatically.

1.6 CHANGES TO THE HENT-MODE AND LOAD-MODE FILES

If you have a mode file to be run after an installation of SINTRAN III from diskettes, remove any commands used to initialise XMSG to your system.

The following changes must be made to the mode file to be run after a cold start (usually called HENT-MODE:MODE):

- Remove any commands/mode files used to load XMSG.
- Replace loading of Cosmos Basic Module by new files loading version F of Cosmos Basic Module.
- Remove any commands used to load the ERS/SINTRAN III Watchdog (if you had it installed previously).
- Remove any commands used to initialise the error log used on SINTRAN III version K and previous versions (@INITIALIZE-ERROR-LOG).

The following changes must be made to the batch file to be run after a warm start (usually called LOAD-MODE:MODE):

- Remove any commands used to start the ERS/SINTRAN III Watchdog (if you had it installed previously).
- If you are using DOMINO devices, include the command @START-SERVERS to start all system included servers before starting the ND-500/5000 part of the system.
- Make certain that you use the correct version of the XMSG-Command program in your XMSG-START file (the M-version). Note that XMSG-Command and the XMSG-START files are copied to user SYSTEM during installation.

1.7 CHANGES TO THE NEW-SYSTEM PROGRAM

It is now possible to run the different tasks of NEW-SYSTEM separately.

To make NEW-SYSTEM stop and prompt for a new task, you must start the program like this:

```
@NEW-SYSTEM @
```

NEW-SYSTEM has the following parameters in this mode:

WRITE-MESSAGE	write a message to the patch mode file
CHECK-WORKMODE	check if requirements to SINTRAN III
WRITE-SYSINFO	write information about the hardware and software of the system
UPDATE	update clock
COPY-FILES	copy files
CPU-UPDATE	update CPU number and CPU type
FILE-TEST	check if old values indicated in the patch file are correct.
LIST-IMPLEMENTED-PATCHES	list all patches implemented in SINTRAN III on this system
RUN-PATCHEFIL	start processing the patch file
ALL	run all of the above parts
HELP	write this list
EXIT	exit from NEW-SYSTEM

1.8 EXAMPLE OF INSTALLATION OF SINTRAN III/VSX

This example assumes you are upgrading your system from one of the K-version generations. For brevity, it is also assumed that you are installing all products from double-density/double-sided diskettes.

A more detailed installation description is given in the product description for: SINTRAN III/VSX, version L
SINTRAN III Configuration
ND-500/5000 System Package for version L
ND-5000 microcode (ND-5000 systems only)

- First, ensure that you have the correct versions of all products you need: SINTRAN III/VSX version L with patch file diskette
  SINTRAN III Configuration - version E
  ND-500/5000 System Package (ND-500/5000 systems) ver.B
  ND-5000 microcode (ND-5000 systems only)

- Then give the commands: @DIRECTORY-STATISTICS...
  and: @LIST-TITLE

  Note the following information:
  - the device name and unit (and subunit if any) number of the directory marked as "(MAIN AND DEFAULT DIRECTORY)"
  - the CPU number and CPU type of your system.

- Finally, run the old version of S3-CONFIG and select the PRINT option to get a print-out of your previous configuration. You use this to set the correct configuration on your new system.

- Stop the system in a controlled way as described in the SINTRAN III System Supervisor manual.

- You may at this point choose to install any new versions of software required and update the files to be run after a cold and warm start, or you may choose to do this at a later stage. In this example, we have chosen to wait.

- Press the STOP and MCL buttons on the front panel.
- Insert SINTRAN III diskette number 1 in FLOPPY-DISC-1 unit 0
- Give the command 1560B (without typing a ↵)
- You will then get a list of disk types and you are asked to give the disk type of your system disk.
  Find the disk type corresponding to the device name you noted and give the type as the number of the disk type in the list.
- Wait until you get the message "TYPE ANY MACM COMMAND".
- Type the command 10,0$ (without typing a ↵)
- Wait until you get the message "**** 000000 DIAGNOSTICS ****".
- Remove SINTRAN III diskette number 1 from FLOPPY-DISC-1 unit 0
- Insert SINTRAN III diskette number 2 in FLOPPY-DISC-1 unit 0
- Type the command 10,0$ (without typing a ↵)
- Wait until you get the message "**** 000000 DIAGNOSTICS ****".
- Type the command 22: (without typing a ↵)
- Wait until you get the message "PAGES FOR SWAPPING (OCT:) xxxxx .
- You must now enter the main directory of your system:
  - Log in without giving user:
    Press ESC
    After "ENTER" press ↵
    After "PASSWORD" press ↵
  - Then give the command: @ENTER-DIRECTORY↵
    and answer the questions for device name, unit (and subunit) with the information you noted about your main directory.
  - Log out: @LOGOUT↵
  - Log in as user SYSTEM:
    Press ESC
    ENTER SYSTEM↵
    PASSWORD: <your SYSTEM password>↵
- Remove SINTRAN III diskette number 2 from FLOPPY-DISC-1 unit 0
- Insert SINTRAN III diskette number 3 in FLOPPY-DISC-1 unit 0
- Give the command: @ENTER-DIRECTORY,,FLOPPY-DISC-1.0↵
- Run the NEW-SYSTEM program: @(2:)NEW-SYSTEM↵
- Answer the questions for CPU number and CPU type with the information you noted.

- When asked if you want to run the patch file, answer Y(es)
- Remove SINTRAN III diskette number 3 from FLOPPY-DISC-1 unit 0
- Insert the Patch file diskette in FLOPPY-DISC-1 unit 0
- Then answer Y(es) for ready to continue.
- When asked to do a cold start to set the patches into effect, do the following:
- Remove the Patch file diskette from FLOPPY-DISC-1 unit 0
- You should now install the SINTRAN III Configuration program:
  - Insert the diskette containing the SINTRAN III Configuration program (ND-211024) in FLOPPY-DISC-1 unit 0.
  - Give the command: @ENTER-DIRECTORY,,FLOPPY-DISC-1.0↵
  - Delete any old version of the Configuration program and copy the program to disk:
    @DELETE-FILE S3-CONFIG:PROG↵
    @COPY-FILE "S3-CONFIG-E:PROG" (211024:F-U)S3-CONFIG-E:PROG↵
  - IF your system includes Net/One, you should install the NOTS-Service program delivered on the same diskette:
    Delete any old version of the NOTS-Service program and copy the program to disk:
    @DELETE-FILE NOTS-SERVICE:PROG↵
    @COPY-FIL "NOTS-SERVICE-B:PROG" (211024:F_:"NOTS-SERV:PROG↵
  - Give the command: @RELEASE-DIRECTORY 211024↵
  - Remove the diskette containing the SINTRAN III Configuration program (ND-211024) from FLOPPY-DISC-1 unit 0.
- Run the SINTRAN III Configuration program to update SINTRAN III according to your configuration: @S3-CONFIG-E.GENERATE↵
- IF you want to change the configuration of your system, run the configuration program: @S3-CONFIG-E↵
  and change the appropriate parameters.
- Now, give the command @COLD-START↵
- Wait until you get the message "PAGES FOR SWAPPING (OCT:) xxxxx".
- You must now (again) enter the main directory of your system:
  - Log in without giving user:
    Press ESC
    After "ENTER" press ↵
    After "PASSWORD" press ↵

- Then give the command: @ENTER-DIRECTORY↵
  and answer the questions for device name, unit (and subunit) with the information you noted about your main directory.

- Log out: @LOGOUT↵

- Log in as user SYSTEM:
  Press ESC
  ENTER SYSTEM↵
  PASSWORD: <your SYSTEM password>↵

- The following points (until "Run the mode file HENT-MODE:MODE") on the next page only concern ND-500 and ND-5000 systems, and should be ignored for ND-100/ND-110 installations.

- You should now install the products contained in the ND-500/5000 System Package (for version L):

  - Insert the diskette containing the ND-500/5000 System Package for version L (ND-211305) in FLOPPY-DISC-1 unit 0.

  - Give the command:
    @ENTER-DIRECTORY,,FLOPPY-DISC-1,0↵

  - Delete any old version of the ND-500 Background Monitor and copy the new version to disk:
    @DELETE-FILE ND-500-MON:PROG↵
    @COPY-FILE "ND-500-MON-J:PROG" (211305:FL)ND-500-MON-J:PROG↵

  - Delete any old version of the ND-500 Swapper and copy the new version to disk:
    @DELETE-FILE SWAPPER:PSEG↵
    @DELETE-FILE SWAPPER:DSEG↵
    @COPY-FILE "SWAPPER-K:PSEG" (211305:F-U)SWAPPER-K:PSEG↵
    @COPY-FILE "SWAPPER-K:DSEG" (211305:F-U)SWAPPER-K:DSEG↵

  - Give the command: @RELEASE-DIRECTORY 211305↵

  - Remove the diskette containing the ND-500/5000 System Package from FLOPPY-DISC-1 unit 0.

- The following points (until "Run the mode file HENT-MODE:MODE") below only concerns ND-5000 systems and should be ignored for all other installations.

- You should now install the correct version of the microprogram for your ND-5000 system.

  - Insert the diskette containing the ND-5000 microprogram for the type of ND-5000 system you have (ND-5200, ND-5400, ND-5500, ND-5700 or ND-5800) in FLOPPY-DISC-1 unit 0.

  - Give the command: @ENTER-DIRECTORY,,FLOPPY-DISC-1,0↵

- Copy the new version of the microcode to disk:

- If you have an ND-5200, ND-5400, ND-5500, ND-5700 or ND-5800, do as follows:
  @COPY-FILE CONTROL-STORE:DATA (211:)MIC-5xxx-2-500:DATA↵
  and substitute xxx with 200, 400, 500, 700 or 800 depending on the type of ND-5000 you have

- If you have an ND-5900, do as follows:
  @COPY-FILE CONTROL-1-STORE:DATA (211:)MIC-5800-2-500:DATA↵
  and repeat this command, copying to CONTROL-2-STORE:DATA, etc. depending on which model of ND-5900 you have.

- Give the command: @RELEASE-DIRECTORY 211↵

- Remove the diskette containing the ND-5000 microprogram from FLOPPY-DISC-1 unit 0.

- Run the mode file HENT-MODE:MODE (to be run after a cold start):
  @MODE HENT-MODE:MODE,,↵

2. SINTRAN III COMMANDS

2.1 COMMANDS REMOVED

2.1.1 @CHANGE-BACKGROUND-SEGMENT-SIZE

2.1.2 @INITIALIZE-ERROR-LOG

2.1.3 @PRINT-ERROR-LOG

2.2 MODIFIED COMMANDS

2.2.1 @COPY

The COPY command now opens the source file prior to opening the destination file. This means that if the source file could not be opened successfully, the destination file is not affected.

2.2.2 @DEVICE-FUNCTION

Two new functions are now available: RESERVE-DEVICE
and RELEASE-DEVICE

These functions only apply to configurations having two ND-100 CPUs connected to a common SCSI bus. The commands are used to reserve or release magnetic tape units and streamer tape units connected to the SCSI bus for exclusive use by one ND-100 CPU.

Note that the commands will not reserve any device for use by a program in the usual SINTRAN III way.

2.2.3 @MODE

The default file type used if the input file is specified without type, is changed: first attempt to open the file with type :MODE
then try :SYMB.

Note that this means that the actual order of attempts are:

1. :MODE on own user
2. :MODE on user SYSTEM
3. :SYMB on own user
4. :SYMB on user SYSTEM

2.2.4 @RT-PROGRAM-LOG

The command RT-PROGRAM-LOG is now available on terminals connected to a NOTS controller (Net/One) and to MTAD devices.
In such cases, device no. 1 (the console terminal) is used as clock.

Disk units connected to a DOMINO controller is not supportec by this command.

2.2.5 @START-PROGRAM-LOG

The command START-PROGRAM-LOG is now available on terminals connected to a NOTS controller (Net/One) and to MTAD devices.
In such cases, device no. 1 (the console terminal) is used as clock.

2.2.6 @STOP-PROGRAM-LOG

The command STOP-PROGRAM-LOG is now available on terminals connected to a NOTS controller (Net/One) and to MTAD devices.
In such cases, device no. 1 (the console terminal) is used as clock.

2.2.7 @TERMINAL-MODE

The fourth parameter, <Logout on missing carrier?>, is now removed. thus the parameter sequence is:

<Capital Letters?>
<Delay after CR?>
<Stop on Full Page?>

Logout on missing carrier is now always enablec.

2.3 NEW COMMANDS

2.3.1 @AUTOMATIC-ND5000-ERROR-MESSAGES

This command is used to give more detailed error messages from all processes running on the ND-500/5000 on the error device.
Error returns from all monitor calls will generate error reports.
All messages are routed through the ERS/SINTRAN III Watchdog.

Parameter: <On or OFF (default is OFF)>

The AUTOMATIC-ND500-ERROR-MESSAGES command is restricted to user SYSTEM.
Note that the number of messages produced may be quite large, thus this command should only be used for debug purposes.

The logging of error messages from ND-500/5000 processes is not affected by a restart of the ND-500/5000, but will be cancelled by a warm start.

2.3.2 @FILE-SYSTEM-ERROR-MESSAGES

This command is used to give more detailed error messages from the file system monitor calls.
The detailed error messages may be given on the terminal (for each user) or on the error device (for the whole system).

Parameters: <Log errors from own process on terminal (yes/no)>
[<Log errors from own process on error device (yes/no)>]
[<Log errors from all processes on error device (yes/no)>]

Default value of all parameters is No.

Public users may only log errors from their own process on their terminal. Logging errors on the error device (from selected or all processes) is restricted to user SYSTEM.

Logging of file system errors from a process is cancelled when logging in or out.

2.3.3 @LIST-ALL-OPEN-FILES

This command is used to list all files open on a directory.

Parameters: <Directory name>
<Output file>

Default value of the parameter <Directory name> depends on the user giving the command. For user SYSTEM, it is all directories; for all other users, it is all directories entered on floppy disks.
Default value of the parameter <Output file> is the terminal.

The LIST-ALL-OPEN-FILES command is restricted to user SYSTEM if a directory or disk is specified. If the directory specified is on floppy disk, the command is allowed for all users.

2.3.4 @LIST-SERVERS

List all servers considered to be part of SINTRAN III (and delivered together with SINTRAN III).

Parameter: <Output file>

The LIST-SERVERS command is restricted to user SYSTEM.

The following information is listed:
- the name of the server (RT-program name)
- the version
- the start code : 0 = started explicitly (or not to be started)
1 = started at SINTRAN start-up
2 = started with the START-SERVERS command

2.3.5 @SET-DIRECTORY-AVAILABLE

Set a directory available for general use after it has been reserved for special use.

Parameter: <Directory name>

Public users may only use the SET-DIRECTORY-AVAILABLE command on directories on floppy disks. The SET-DIRECTORY-AVAILABLE command on other disks is restricted to user SYSTEM.

2.3.6 @SET-DIRECTORY-UNAVAILABLE

Set a directory unavailable for general use.

Parameter: <Directory name>

After a directory is set unavailable, no more users may enter it (log in with this directory as main or default directory).
Furthermore, no more files may be opened on the directory.

Users already entered on the directory, or files already open, are not affected.

Public users may only use the SET-DIRECTORY-UNAVAILABLE command on directories on floppy disks. Using the SET-DIRECTORY-UNAVAILABLE command on other disks is restricted to user SYSTEM.

2.3.7 @START-SERVERS

Start all servers considered to be part of SINTRAN III (and delivered together with SINTRAN III).

Parameters: None

The START-SERVERS command is restricted to user SYSTEM.

The START-SERVERS command will only start servers which are passive.

3. MONITOR CALLS (ND-100)

3.1 MODIFIED MONITOR CALLS

3.1.1 TERMO MON 52

The option to set or clear <Logout on Missing Carrier> is no longer supported. The values supported for the parameter <Mode> are now as follows:

Terminal Mode	Capital Letters	Delay after CR	Stop on Full Page
0	No	No	No
1	Yes	No	No
2	No	Yes	No
3	Yes	Yes	No
4	No	No	Yes
5	Yes	No	Yes
6	No	Yes	Yes
7	Yes	Yes	Yes

The old additional values (10s - 17s) are interpreted as 0-7.

Logout on missing carrier is now always enabled.

3.1.2 ABSTR MON 131

Function 46s now returns the type of magnetic tape drive present:
= 0 : Pertec / Tandberg
= 1 : STC magnetic tape
= 2 : SCSI magnetic tape

3.1.3 WSEG MON 164

If bit number 17s (the sign bit) is set in the segment number, the segment page link is cleared.

3.1.4 CPUST MON 262

The ND-110/CX and ND-120/CX CPUs are now supported and some new values are returned. The following words of the returned array are affected:

DISP	NAME	DESCRIPTION
1	HWINFI(0)	Hardware information Left byte = CPU type 0 = NORD-10 with 48-bit floating 1 = NORD-10 with 32-bit floating 2 = ND-100 with 48-bit floating 3 = ND-100 with 32-bit floating 4 = ND-110/CX with 48-bit floating 5 = ND-110/CX with 32-bit floating 6 = ND-120/CX with 48-bit floating 7 = ND-120/CX with 32-bit floating 10 - 255 : not used Right byte = Instruction set 0 = Standard (NORD-10 or ND-100) 1 = NORD-10 Commercial, ND-100/CE 2 = ND-100/CX w/micro segadm. for 4 PITs 3 = ND-110/PCX, ND-100/CX with microprog. seg.adm. for 16 PITs 4 = ND-120/PCX 5 - 7 : not used 10 = ND-120/CX 11 = ND-110/CX print 3095 12 = ND-110/CX print 3090 13 - 255 : not used
2	HWINFO(1)	ND-110/CX or ND-120/CX microprogram version
3	HWINFO(2)	System type (100, 500, 502, 5561, ...) The system type is either supplied when the system is generated or you will be asked for it when you install SINTRAN from diskettes.

3.1.5 MLAMU MON 315

One new function, function 13₈ is introduced.

Function no. 13₈

```
PARLI, (FUNC          % function number
       (LAMID         % LAMU id
       (LMOD          % status
       (FPAR          % for future extension
```

Input parameters:

FUNC	= 13	: set cache- or temporary status of LAMU
LAMU id		: The LAMU id of the LAMU selected.
LMOD	= 1	: Turn cache on
	= 2	: Turn cache off
	= 3	: Set LAMU as temporary
	= 4	: Reset temporary LAMU
FPAR	= 0	: This parameter is reserved for future extensions and should be zero.

Output parameters:
None

Rules:
1. On ND-100/CX CPUs (as opposed to ND-110 and ND-120 CPUs) this function should be usec with care. If you turn off cache handling for non-adjacent memory areas, you will also turn off cache handling of the memory area in between, thus degrading system performance.

3.1.6 FSMTY MON 327

Five new functions are introduced:

T-register	= 5	: for internal use by ND only
	= 6	: get next open file on a directory
	= 7	: set directory available
	= 10₈	: set directory unavailable
	= 11₈	: get next file name matching a specified string
	= 11₈	: get value of the SINTRAN variable EXSECURITY

The monitor call format varies slightly for each function:

Function no. 6:

Function:
Get next open file (for a logged-in user) on a directory.

Monitor call format:

```
        LDT   FUNC      % T = function (6)
        LDA   FILNO
        COPY  SA DD     % D = open file number
        LDA   DIRIN     % A = directory index
        LDX   TERNO     % X = terminal number
        MON   327
        JMP   ERROR     % error return
        ..........      % normal return
FUNC,   6
FILNO,  -1
DIRIN,  1
TERNO,  17
```

Input parameters:
T-register : function = 6
A-register : directory index
D-register : open file number (-1 means from start)
X-register : terminal number (-1 means from start)

Output parameters:
Return: Error - A-register contains error code, except:
A-register = -1 = no more open files in directory
Skip return: OK, A-register = user index of open file
T-register = object index of open file
D-register = open file number
X-register = terminal number

Function no. 7:

Function:
Set a directory available for general use.

Monitor call format:

```
        LDT   FUNC      % T = function (7)
        LDA   DIRIN     % A = directory index
        MON   327
        JMP   ERROR     % error return
        ..........      % normal return
FUNC,   7
DIRIN,  1
```

Input parameters:
T-register : function = 7
A-register : directory index

Output parameters:
Return: Error - A-register contains error code
Skip return: OK, normal return

Function no. 10s:

Function:
Set a directory unavailable for general use.
This means: - no more users may enter it (log in with this directory as main or default directory)
- no more files may be opened on the directory

Monitor call format:

```
        LDT   FUNC      % T = function (10)
        LDA   DIRIN     % A = directory index
        MON   327
        JMP   ERROR     % error return
        ..........      % normal return
FUNC,   10
DIRIN,  1
```

Input parameters:
T-register : function = 10
A-register : directory index

Output parameters:
Return: Error - A-register contains error code
Skip return: OK, normal return

Function no. 11s:

Function:
Get next file matching a specified string.

Monitor call format:

```
        LDT   FUNC      % T = function (11)
        LDA   FILNO
        COPY  SA DD     % D = object index of file to check
        LDA   (FNAME    % A = address of buffer to receive file name
        LDX   (MATCH    % X = address of buffer containing match string
        MON   327
        JMP   ERROR     % error return
        ..........      % normal return
FUNC,   11
FILNO,  0
MATCH,  'TEST'
FNAME,  0; *+47/
```

Input parameters:
T-register : function = 11
A-register : address of buffer to receive full file name
D-register : object index of first file to check
X-register : address of buffer containing match string

Output parameters:
Return: Error - A-register contains error code
Skip return: OK, D-register = object index of a file matching

Function no. 12s:

Function:
Get the value of the SINTRAN III variable EXSECURITY.

Monitor call format:

```
        LDT   FUNC     % T = function (12)
        MON   327
        JMP   ERROR    % error return
        ..........     % normal return
FUNC,  12
```

Input parameters:
T-register : function = 12

Output parameters:
Return: Error - A-register contains error code
Skip return: OK. A-register = value of EXSECURITY

The variable EXSECURITY has the following layout:

Bit 0: No listing of command lines in the @TERMINAL-STATUS command except for own user. If the command is performed by user SYSTEM, the command lines for all background programs logged in will be listed. The command lines will also be listed for the background programs running under the same user as the one executing the @TERMINAL-STATUS command.

Bit 1: The background segment, both program and data bank, will be set to zero when logging out. This feature will delay the logout sequence considerably (seconds). If the background program has been terminated abnormally, this zeroing will take place the first time you in after the abnormal termination.

Bit 2: The scratch file pages written to in the last session, will be set to zero when logging out. This will also slow down the logout sequence.

Bit 3: Zeroing of pages released from a file, normally in the @DELETE-FILE command.

Bit 4: Not allowed to log in if the user has no password. Only one login without a password is allowed after @CREATE-USER.

Bit 5: The commands @HELP and @LIST-REENTRANT will only list commands and reentrant subsystems/ND-500 standard domains available to the user giving the command. An unprivileged user will thus not "see" commands available only to users SYSTEM or RT.

The default value of the variable EXSECURITY is 7 (bits 0, 1 and 2 are set) but this can be changed by the SINTRAN-Service-Program command *CHANGE-VARIABLE.

3.1.7 ADP MON 342

One new function has been introduced:

T-register = 15₈ : get ADP segment number

Function no. 15₈:

Function:
Get ADP segment number.

Monitor call format:

```
        LDT   FUNC      % T = function (15)
        MON   342
        JMP   ERROR     % error return
        ..........      % normal return
FUNC,   15
```

Input parameters:
T-register : function = 15

Output parameters:
Return: Error - A-register contains error code.
Skip return: OK, T-register = segment number

3.1.8 CONFG MON 343

One configuration parameters has been extended (41₈), and five new configuration parameters have been defined (51₈ - 55₈), see below.

Monitor call format:

```
        LDA (PARLI      % A = address of parameter list
        MON 343         % CONFG
        JMP ERROR       % Error handling
        .........      % normal return

PARLI,  (FUNC           % Function code
        (INDEX          % Configuration parameter number
        (SUBIN          % Subindex (only used for some values of INDEX)
        (VALUE          % Input and/or output value (integer or string)
```

The following values of the function code are used, but not all functions apply to all configuration parameters:

```
FUNC = 1 : (Save)       Read value from SINTRAN III save area
                        (next value to be used after a cold start)
       2 : (Read)       Read current active value
       3 : (Write)      Write value to SINTRAN III save area
                        (next value to be used after a cold start)
       4 : (Generated)  Read generated value
       5 : (Free)       Read currently unused units
       6 : (Special)    Parameter dependent
```

MON 343 is restricted to user SYSTEM, and is allowed from PT-programs.

Note that MON 343 is generally intended to be used by the reconfiguration program (S3-CONFIG).

Furthermore, note that a cold start is necessary to make changes come into effect (all changes are made as "write new value to save area").

The following new configuration parameters can be specified:

Number	Parameter name	Possible functions: Save/Read/Write/Gen/Free
41$_8$	Memory configuration	R
51$_8$	Read first page in multiport memory	R
52$_8$	Read XMSG parameters used for calculation of space	R
53$_8$	Manipulate (all) XMSG configuration parameters	SRW
54$_8$	Read first free address on XMSG segment	S
55$_8$	NUCLEUS configuration parameters	SRW

The following error codes can be returned:

A-reg.	Explanation
25	You are not authorized to do this
33	No such logical unit
174	Illegal parameter
201	Illegal function code (which means "illegal function code for this index")
3201	Illegal index (which means "illegal index or subindex")
3222	Too big tables. Reduce the values of some of the variables: X4TSK, X4PRT, X4MES, X5LNK, X4ACK, X4NBF, or X5TPB

Configuration parameter: 41₈:

Parameter name:
Memory configuration

Input parameters:
FUNC = Function, see below.
INDEX = 41
SUBIN = Subparameter, see table below.
VALUE = Input value not used for this configuration parameter

Subparameter:

0	Memory configuration (total)
1	ND-100 local (including PIOC)
2	PIOC
3	MPM-3
4	MPM-4
5	MPM-5
6	For swapping
7	For SINTRAN
10₈	RT-common
11₈	Reserved by ND 500
12₈	Memory Type Array

Output parameters:
VALUE = Memory configuration (in pages)

Functions allowed for this parameter:
Read current active value

Configuration parameter: 51₈:

Parameter name:
Read first page in multiport memory

Input parameters:
FUNC = Function, see below.
INDEX = 51
SUBIN = Subindex not used for this configuration parameter
VALUE = Input value not used for this configuration parameter

Output parameters:
VALUE = ND-100 page number of the first page of the multiport memory
of an ND-500/5000 system.
The value -1 is returned if no multiport memory is found.

Functions allowed for this parameter:
Read current active value

Configuration parameter: 52₈:

Parameter name:
Read XMSG parameters used for calculation of space

Input parameters:
FUNC = Function, see below.
INDEX = 52
SUBIN = Subparameter, see table below.
VALUE = New value of an XMSG parameter, see table below.

Subparameter:
1 Length of one XT-block (variable: 4TLEN)
2 Length of one XP-block (variable: 4PLEN)
3 Length of one XM-block (variable: 4MLEN)
4 Length of one XL-block (variable: 4LLEN)
5 Length of one XD-block and XF-block (variable: 5FLEN)
6 Length of function block (variable: X5FUN)
7 End of segment 76 (S3XMK) (variable: X6TOP)

Output parameters:
VALUE = Next value (from the SINTRAN III save area) or
current active value (depending on function) of an XMSG
parameter (see table above).

Functions allowed for this parameter:
Read current active value

Configuration parameter: 53₈:

Parameter name:
Manipulate (all) XMSG configuration parameters

Input parameters:
FUNC = Function, see below.
INDEX = 53
SUBIN = Subparameter, see table below.
VALUE = New value of an XMSG parameter, see table below.

Subparameters:

No.	Description	Variable name	Range
1	Number of task descriptors	X4TSK	3:500
2	Number of ports	X5PRT	3:511
3	Number of named systems/port	X4NAM	1:832
4	Length of name in words	X4NLW	4:20
5	Number of message elements	X4MES	2:4000
6	Message size in bytes	X4MMX	256:32766
7	Buffer space owned by a task (in bytes)	X5MTS	256:65334
10_8	Message buffer space in pages	X4BPG	1:256
11_8	Maximum number of calls in a multicall function	X4MCB	0:100
12_8	Number of system accessible	X4SIR	1:832
13_8	Number of links	X5LNK	0:200
14_8	Hdlc/megalink timeout in XTUs	X4LTO	0:32767
15_8	Timeout when receiving datagrams (in XTUs)	X5T01	0:32767
16_8	Timeout when transmitting datagrams (in XTU s)	X5T02	0:32767
17_8	Frame size in words (input	X3FSZ	0:16282
20_8	Frame size in words (output	X4FSO	0:16282
21_8	Number of network acknowledgement frames	X4ACK	0:500
22_8	Number of receive buffers per link	X4NBF	0:8
23_8	Number of transmit buffers per network server	X4TMS	1:100
24_8	Maximum number of SABMs when starting the link	X4IRM	0:65535
25_8	Number of repeats before link is stopped	X4RPM	0:32767
26_8	Number of hops allowed	X4MXH	0:255
27_8	Gateway timeout in XTUs on sending to net server	X4NGT	0:32767
30_8	Number of trace buffers	X5TRB	0:127

Output parameters:
VALUE = Next value (from the SINTRAN III save area) or
current active value (depending on function) of an XMSG
parameter (see table above).

Functions allowed for this parameter:
Read save area (next value)
Read current active value
Write to save area (new next value)

Configuration parameter: 54₈:

Parameter name:
Read first free address on XMSG segment

Input parameters:
FUNC = Function, see below.
INDEX = 54
SUBIN = Subindex not used for this configuration parameter
VALUE = Input value not used for this configuration parameter

Output parameters:
VALUE = The first free address on segment S3XMK (segment no. 76).

Functions allowed for this parameter:
Read save area (next value)

Configuration parameter: 55₈:

Parameter name:
NUCLEUS configuration parameters

Input parameters:
FUNC = Function, see below.
INDEX = 55
SUBIN = Subparameter, see table below.
VALUE = New value of a NUCLEUS parameter, see table below.

Subparameter:

1	Total message buffer area for system processes in pages
2	Total number descriptors for system processes in pages
3	Total message buffer area for public processes in pages
4	Total number descriptors for public processes in pages
5	Message buffer area per user process in pages
6	Number of descriptors per user process
7	Trace buffer size in pages
10_8	NUCLEUS startup function (future extension)
11_8	Future extension
12_8	Future extension

Output parameters:
VALUE = Next value (from the SINTRAN III save area) or
current active value (depending on function) of a NUCLEUS
parameter (see table above).

Functions allowed for this parameter:
Read save area (next value)
Read current active value
Write to save area (new next value)

3.2 NEW MONITOR CALLS

3.2.1 NUCL MON 347

MON 347 (NUCL) is introduced for using the NUCLEUS system. The monitor call is intended for internal use by ND, but may be used through the NUCLEUS programming library (ND-250295). Refer to pages 59-69 for more information about the NUCLEUS programming library and NUCLEUS in general.

3.2.2 RWSEG MON 350

This monitor call is used to read or write a location on a segment or in physical memory.

Monitor call format:

```
        LDA  (PARLI                 % A = address of parameter list
        MON  350                    % RWSEG

PARLI,  (FUNC                       % function
        (SGBNK                      % segment no. or memory bank no.
        (ADDR                       % address within segment or bank
        (VALUE                      % value to write
```

Input parameters:

```
<FUNC>      function: 0 = read
                      1 = write
                      bit 17s set = physical memory
                                    otherwise segment
<SGBNK>     segment number or memory bank number
<ADDR>      address within segment or bank
<VALUE>     value to write (used if function = 1)
```

Output parameters:

```
<VALUE>     value read (if function = 0)
```

Rules:
Only available for background programs running on user SYSTEM.

4. SINTRAN-SERVICE-PROGRAM

4.1 COMMANDS WHICH MAY CAUSE PROBLEMS

4.1.1 *STOP-XMSG

Stopping XMSG can lead to problems for several programs and system servers using XMSG for communications.

4.2 MODIFIED COMMANDS

4.2.1 *CHANGE-VARIABLE

The following new symbolic variable names are now available:

MTMAX Maximum number of MTAC data fields

UCLOAD Flag to signal automatic load of micro program on ND-110 and ND-120 CPUs.

4.2.2 *CREATE-SYSTEM-LAMU

Specifying physical memory address = -1 means that the system LAMU is to be placed in the multi-port memory, thus accessible from the ND-500/5000 part of the system.

4.2.3 *PAGES-TO-LAMU

Specifying physical memory address = -1 means that the system LAMU is to be placed in the multi-port memory, thus accessible from the ND-500/5000 part of the system.

Pages given to the LAMU area on the SINTRAN image area are no longer placed in the table of memory not to be initialised (accessed) at SINTRAN start-up (the NINIT table).

4.3 NEW COMMANDS

4.3.1 *LAMU-CONNECTIONS

List all RT-programs connected to a specific LAMU.

Parameters: <LAMU ID (OCT)>
<OUTPUT FILE>

Default value of <LAMU id> is all LAMUs.
Default value of <Output file> is terminal.

5. CONFIGURATION PROGRAM

The SINTRAN III Configuration program (ND-211024) is available to make changes in a generated system of SINTRAN III/VSX version L. The program should be installed together with SINTRAN and is started by the @RECOVER command: @S3-CONFIG in just the same way as other programs. Use of the program is restricted to user SYSTEM.
The configuration program is a screen-oriented program, but can also run on a hardcopy terminal.
S3-CONFIG should be run every time you install or reinstall SINTRAN.

The program has 12 commands: 7 commands for selecting a menu of configuration parameters which can be changed:

BACKGROUND IO-COMM LAMU SCSI XMSG NUCLEUS VARIOUS

a command to display the value of parameters which cannot be changed:

DISPLAY

and 4 utility commands to print a report of the current configuration, saving the changed configuration, getting help and exit:

PRINT GENERATE HELP EXIT

You use the arrow keys. (←) or (→), or the first letter of a command name to navigate between commands.
If you select a command which enables you to change parameters, use the return key (↵) to enter the menu of parameters, and use the arrow keys. (↑) or (↓), to navigate. When finished, use the EXIT key. or the "Home" key (↖) to exit from the menu.
The HELP key can be used at all times to get information about the current configuration parameter, etc.

5.1 THE UTILITY COMMANDS

The **PRINT** command will print the current configuration to a file. You will be asked for output file and this parameter has no default value.

The **GENERATE** command will save the changes you have made to the current configuration of SINTRAN III in a configuration file. It will also update the save-area of SINTRAN. You will be asked to confirm that you want to save the changes. Note that you must do a cold start to activate the changes because only the save-area is changed.
This command can be given as part of the @RECOVER command to run the configuration program: @S3-CONFIG GENERATE. This feature can be used to reconfigure SINTRAN, in exactly the same way as before, after loading from diskettes, for example when installing a new patch file.

The **EXIT** command is used to exit from the configuration program. If you have made any changes to the configuration, and the changes have not been saved (by the GENERATE command), you will be asked if you want to save the changes.

The **HELP** command will give a brief explanation of the 7 commands used to select menus of configuration parameters which can be changed.

5.2 THE SELECTION COMMANDS

For all parameters, values are shown under the headings Current, Next, Max and Input. The **Current** value is the value currently used by SINTRAN. The **Next** value is the value which will apply after the next cold start. The **Max** value is the maximum generated for this version of SINTRAN. The **Input** value is the default value for new input. This is the value you change if you want to set a new value for a parameter.

All parameters shown with an **Input** value can be changed. You use the return key (↵) to enter the menu, and the arrow keys, (↑) and (↓), to navigate. When finished, use the EXIT key or the HOME key (\) to return to the main command menu.

The **BACKGROUND** command will display a menu of configuration parameters related to background processes. The menu will resemble the following:

	Current	Next	Max	Input
Number of TADs	10	10	70	10
Number of batch processors	5	5	10	5
Number of spooling programs	8	8	22	8
Number of background programs	32	32	121	32
Background allocation	Present			
Number of Symbolic Debugger segments	8	8	32	8
Number of ND-500 processes	48	48	129	48
Number of remote file access segments	16	16	50	16
System segment size	5	5	8	5
Mon ADP	1	1	1	1

Return: [\] or [.] Field info: [HELP] or [?]

The configuration parameters listed in this menu are:

Number of TADs — Number of terminal access devices. Each terminal on a remote system which is to use this system uses a TAD. One TAD is also used by the remote file server.

Number of batch processors — Number of batch jobs to run at a time.

Number of spooling programs — Number of printers used simultaneously.

Number of background programs — Number of "terminals" to be used simultaneously. If background allocation is present, it should be number of TADs + number of terminals + number of Telefix devices to be used simultaneously.

Background allocation	Indicates if the background allocation system is in use. This parameter cannot be changed.
Number of Symbolic Debugger segments	Number of simultaneous users of the Symbolic Debugger.
Number of ND-500 processes	Number of simultaneous users of the ND-500 part. Should usually be equal to "number of background programs" + 1.
Number of remote file access segments	Number of simultaneous users of remote of remote file access.
System segment size	Size (in pages) of the system segment. This size will affect the number of open files for each user as follows: default (= minimum) size (5) provides 48 file buffers, each additional page up to total maximum of 8) provides 16 buffers. Each open file uses 2 buffers if sequential access 1 if random. Maximum number of open files are 64.
Mon ADP	Indicates if MON ADP (MON 342) is to be available.

Note: if the Background Allocation System is not present, the **Next** and **Input** fields of *Number of background programs* will not be used.

The **IO-COMM** command will display a menu of configuration parameters related to input/output and communication.
The menu will resemble the following:

	Current	Next	Max	Input
Number of HDLC connections			6	
Number of synchronous modems on HDLC			6	
Number of X.21 connections	0	0	2	0
Define spooling device numbers				x
Define HDLC interface as HDLC or modem				x
Define printer type				x

To edit these tables, type: [<>] or [E]

Return: [\] or [.] **Field info:** [HELP] or [?]

The configuration parameters listed in this menu are:

Number of HDLC connections	Number of HDLC connection generated for this system.
Number of synchronous modems on HDLC	Number of HDLC connections which can be used for synchronous modems.
Number of X.21 connections	Number of X.21 connections.
Define spooling device numbers *Define HDLC interface as HDLC or modem* *Define printer type*	Use the (<>) key or E to enter sub-menus for these parameters. See below.

The 3 last configuration parameters in the menu **IO-COMM**. contain tables of values, and when you select one of these, you will get a sub-menu on your terminal.

The sub-menu for the parameter **Define spooling device numbers** will resemble the following:

Define spooling device numbers. Enter a logical device number.

Spooling	Current	Next	Input	Spooling	Current	Next	Input
1	5	5	5	2	59	59	59
3	0	0	0	4	0	0	0
5	0	0	0	6	0	0	0
7	0	0	0	8	0	0	0
9	0	0	0	10	0	0	0
11	0	0	0	12	0	0	0
13	0	0	0	14	0	0	0
15	0	0	0	16	0	0	0
17	0	0	0	18	0	0	0
19	0	0	0	20	0	0	0

Return: [\] or [.] Field info: [HELP] or [?] Scroll: [→↓] or [N]

If you need to set spooling device numbers for spooling processes 21-40 or 41-60, similar sub-menus will appear for these. Either navigate "past" 20 (40), or select next menu (N) key.

The sub-menu for the parameter **Define HDLC interface as HDLC or modem** will resemble the following:

Define HDLC interface as HDLC or modem.

0=Do not use this interface.
1=HDLC.
2=Synchronous modem.

HDLC	Current	Next	Input	HDLC	Current	Next	Input
1	1	1	1	2	1	1	1
3	1	1	1	4	1	1	1
5	1	1	1	6	1	1	1
7	0	0	0	8	0	0	0
9	0	0	0	10	0	0	0
11	0	0	0	12	0	0	0
13	0	0	0	14	0	0	0
15	0	0	0	16	0	0	0
17	0	0	0	18	0	0	0
19	0	0	0	20	0	0	0

Return: [\] or [.] Field info: [HELP] or [?] Scroll: [→|] or [N]

If you need to set status on HDLC connections 21-32, a similar sub-menu will appear for these. Either navigate "past" 20, or select next menu (N) key.

The sub-menu for the parameter **Define printer type** will resemble the following:

Define printer type.

Printer	Current	Next	Input
1	1	1	1
2	0	0	0
3	0	0	0
4	0	0	0

Types: 0 - Do not use this printer.
1 - DMA (Used for Fujitsu)
2 - Parallel (Used for CDC/DP)
3 - Serial

Return: [\] or [.] Field info: [HELP] or [?]

The **LAMU** command will display a menu of configuration parameters related to the LAMU system. The menu will resemble the following:

```
.....................................Current..Next....Max....Input.

Mon MLAMU                              Present
Max number of LAMUs                      32       32    2048      32
Max number of LAMUs per program           2        2      64       2
Max number of system LAMUs               64       64    2048      64

Return: [\] or [.]      Field info: [HELP] or [?]
```

Only the first line of the menu is shown if MON MLAMU is not present.

The configuration parameters listed in this menu are:

Mon MLAMU	Indicates whether MON MLAMU (MON 315) is to be present or not.
Max number of LAMUs	Maximum number of LAMUs (a LAMU is a reserved part of memory).
Max number of LAMUs per program	Maximum number of LAMUs accessible from a single program.
Max number of system LAMUs	Maximum number of system LAMUs.

The **SCSI** command will first display a menu of SCSI magnetic disk and streamer configuration parameters. This menu is extended by a similar menu with parameters for SCSI optical disk and magnetic tape units. The first menu will resemble the following:

```
..............Current..Next.........................Current..Next...
               Adap.ID  Adap.ID                       Adap.ID  Adap.ID

SCSI  disk   1:   1.0      1.0      SCSI  disk   2:    1.3      1.3
SCSI  disk   3:   1.5      1.5      SCSI  disk   4:     .        .
SCSI  disk   5:    .        .       SCSI  disk   6:     .        .
SCSI  disk   7:    .        .       SCSI  disk   8:     .        .
SCSI  disk   9:    .        .       SCSI  disk  10:     .        .
SCSI  disk  11:    .        .       SCSI  disk  12:     .        .
SCSI  disk  13:    .        .       SCSI  disk  14:     .        .

SCSI streamer 1:   1.1      1.1     SCSI streamer 2:     .        .

Return: [\] or [.]  Field info: [HELP] or [?]  Scroll: [→↓] or [N]
```

For each device (magnetic disk or streamer tape unit) you want to define, enter the SCSI adaptor number (1-4) to the left of the period and the SCSI ID number (0-7) to the right of the period on the appropriate line. If you want to delete a definition, position the cursor on the device and press the DELETE-key.

Bear in mind that the system disk (main swapping device), if it is a SCSI disk, must be connected as ID number 0 on SCSI adaptor number 1.

Also note that the SCSI adaptor itself is connected as ID number 7.

If you want to set the configuration parameters for SCSI optical disks or magnetic tape units, press the <scroll down> key or the N-key to select the next menu which will resemble the following:

```
.................Current..Next.........................Current..Next...
                  Adap.ID  Adap.ID                       Adap.ID  Adap.ID

Optical  disk  1:  1.4       1.4      Optical  disk  2:   .        .
Optical  disk  3:   .         .       Optical  disk  4:   .        .


Magnetic tape  1:  1.2       1.2      Magnetic tape  2:   .        .
Magnetic tape  3:   .         .       Magnetic tape  4:   .        .

Return: [\] or [.]   Field info: [HELP] or [?]   Scroll: [↑←] or [P]
```

For each device (optical disk or magnetic tape unit) you want to define, enter the SCSI adaptor number (1-4) to the left of the period and the SCSI ID number (0-7) to the right of the period on the appropriate line. If you want to delete a definition, position the cursor on the device and press the DELETE-key.

Bear in mind that the system disk (main swapping device), if it is a SCSI disk, must be connected as ID number 0 on SCSI adaptor number 1.

Also note that the SCSI adaptor itself is connected as ID number 7.

Changes made to SCSI configuration will be stored in the SINTRAN III image and save areas immediately, and that a warm start is required for the changes to take effect.

The **XMSG** command will display the first of three menus of configuration parameters related to XMSG.
The menu will resemble the following:

	Current	Next	Range	Input
Maximum number of task descriptors	80	80	3:500	80
Maximum number of ports	126	126	3:511	126
Maximum number of named systems or ports	768	768	1:832	768
Maximum length of name in words	16	16	4:20	16
Maximum number of message elements	256	256	2:4000	256
Maximum message size in bytes	2500	2500	256:32766	2500
Max.buffer space owned by a task in bytes	12500	12500	256:65334	12500
Message buffer space in pages	25	25	1:256	25
Maximum calls in multicall functions	8	8	0:100	8
Maximum number of accessible systems	512	512	1:832	512

Return: [\] or [.] Field info: [HELP] or [?] Scroll: [→↓] or [N]

To get the second menu of XMSG configuration parameters, either navigate "past" the last parameter in this menu or press the scroll down key (or N). The second menu will resemble the following:

	Current	Next	Range	Input
Maximum number of links	4	4	0:200	4
Default HDLC or Megalink timeout	10	10	0:32767	10
Timeout in XTUs when receiving datagrams	150	150	0:32767	150
Timeout in XTUs when transmitting datagrams	200	200	0:32767	200
Maximum frame size in words on input	312	312	0:16282	312
Maximum frame size in words on output	312	312	0:16282	312
Maximum number of network acknowledge frames	15	15	0:500	15
Default number of receive frames per link	5	5	0:8	5
No. of transmitted buffers per network server	2	2	1:100	2
Default maximum SABMs when starting link	10	10	0:65535	10

Return: [\] [.] Field info: [HELP] [?] Scroll: [→↓] [N] [↑←] [P]

To get the last menu of XMSG configuration parameters, either navigate "past" the last parameter in this menu or press the scroll down key (or N). To get back to the first menu, use the scroll up key (or P). The third menu will resemble the following:

```
.....................................Current.Next..Range..Inp

Maximum number of repeats before link is stopped   5   5   0:32767  5
Maximum number of hops                            20  20   0:255    20
Gateway timeout in XTUs on sending to net server  50  50   0:32767  50
Number of trace buffers                            2   2   0:127    2

Return: [\] or [.]  Field info: [HELP] or [?]  Scroll: [↑←] or [P]
```

The configuration parameters listed in these menus are:

Maximum number of task descriptors	Each user needs one XT-block. The XT-block (task descriptor) can be regarded as XMSG's RT-description.
Maximum number of ports	A task can open ports through which it can send and receive messages. Supply at least as many ports as task-descriptors.
Maximum number of named systems or ports	Maximum number of systems and ports identified by name.
Maximum length of name in words	Maximum length of the name used to identify systems and ports. Should be ≥ 16 characters
Maximum number of message elements	Messages are sent from ports and are used to communicate with other tasks. The number of messages needed depends on the use of XMSG.
Maximum message size in bytes	This value determines the size of the largest message buffer a task can get.
Maximum buffer space owned by a task in bytes	A task cannot be the owner of more buffer space than this limit. This value should be altered if for example a server constantly uses all the buffer space it is allowed to use. This limit is implemented to prevent one task from reserving all the available XMSG buffer space.
Message buffer space in pages	Total space for message buffers in number of pages.
Maximum calls in multicall functions	It is possible to call XMSG with a parameter buffer specifying multiple calls to reduce the overhead in calling XMSG. The TLIB library requires at least 5.

Maximum number of accessible systems

The maximum number of systems accessible from this system.

Maximum number of links

The total number of HDLC/Megalinks and network servers available for communication with remote systems.

Default HDLC or Megalink timeout

One XTU - XMSG Time Unit is 100 msec. This value should be changed to 50 if slow communication lines are used. Is is wise to change this is the command START-LINK in the XMSG-COMMAND program so that fast links are not affected.

Timeout in XTUs when receiving datagrams

When the first fragment of a datagram (i.e. the 'start-of-datagram' frame) is is received, the network receive timer is started. If the complete datagram (the 'end-of-datagram' frame) is not received before time out, the datagram is not accepted, and will be thrown away.
One XTU - XMSG Time Unit is 100 msec.

Timeout in XTUs when transmitting datagrams

When a message is transmitted to a remote system, the transmission is not finished until a network layer acknowledgement is received from the remote system. When a message is set up for transmission, the network transmit timer is started.
The message must now be transmitted, and a network layer acknowledgement received before the transmit timer expires.
If not (i.e. time out), the message will, if it has been transmitted and the retransmit counter has not expired (4 attempts), be set up for retransmission by the network layer, or, if the retransmit counter has expired or if the message has not been transmitted, the message will be terminated and a bad status being returned to the sending task.
One XTU - XMSG Time Unit is 100 msec.

Maximum frame size in words on input

When messages are transmitted to a remote system, they are split up into datagram fragments by the network layer before the fragments are sent out on the link/network server. The output frame size is not allowed to be greater than the input frame size

Maximum frame size in words on output

When messages are transmitted to a remote system, they are split up into datagram fragments by the network layer before the fragments are sent out on the link/network server. The output frame size is not allowed to be greater than the input frame size

Maximum number of network acknowledge frames	When a datagram is received, a network layer acknowledgement (ACK/NAK) is returned to the sending system. This parameter determines how many frames are reserved for acknowledgement. In addition to these control frames, 10 frames (fixed number) are always reserved for transmission of data/information.
Default number of receive frames per link	Number of receive frames for each link. Maximum is 8.
Number of transmitted buffers per network server	Number of transmit buffers (messages) reserved for each network server. When a network server is started, the specified number of transmit buffers will be taken from the pool of normal message buffers. Must be less than the number of message elements.
Default maximum SABMs when starting link	Number of retries when a link is started. A value of 65535 means infinite.
Maximum number of repeats before link is stopped	Number of retries to send a dataframe before the link is stopped.
Maximum number of hops	Maximum number of systems that a dataframe can (and will) enter on its way to the destination system.
Gateway timeout in XTUs when sending to net server	When a buffer containing a datagram that is to bee sent via a gateway server is sent from XMSG to a network server, the network server must return the transmit buffer to XMSG as soon as possible. If it takes too long, the network server will be stopped by XMSG. Thus, this parameter gives the maximum time a network server can keep the transmit buffer, without being stopped by XMSG. One XTU - XMSG Time Unit is 100 msec.
Number of trace buffers	XMSG can be traced to find errors or to find out how it works. The trace buffers (512 words each) are used to write trace data into. The buffers are dumped on a file by the program XTRACE as soon as they are filled up. Each trace buffer has a descriptor on segment 33. In order to include the trace facilities, the number of trace buffers must be greater than zero.

The **NUCLEUS** command will display a menu of configuration parameters related to NUCLEUS. The menu will resemble the following:

```
.....................................................Current.Next.Input

Message buffer space for system processes in pages      168  168  168
Number of descriptors for all system processes          320  320  320
Message buffer space for all public processes in pages  168  168  168
Number of descriptors for all public processes          192  192  192
Message buffer space per public process in pages        8    8    8
Number of descriptors per public process                8    8    8
Trace buffer space in pages                             2    2    2

Return: [\] or [.]      Field info: [HELP] or [?]
```

The configuration parameters listed in this menu are:

Message buffer space for system processes in pages	Size of message buffer pool for system processes (processes running in DOMINO processors, RT-programs or programs running under users RT or SYSTEM).
Number of descriptors for all system processes	Number of entries in the descriptor table reserved for system processes.
Message buffer space for all public processes in pages	Size of message buffer pool for all public (non-system) processes.
Number of descriptors for all public processes	Number of entries in the descriptor table for all public (non-system) processes.
Message buffer space per public process in pages	Size of message buffer space allowed for each public (non-system) process.
Number of descriptors per public process	Number of entries in the descriptor table allowed for each public (non-system) process.
Trace buffer space in pages	Buffer space allocated for tracing of messages in the NUCLEUS system.

The **VARIOUS** command will display a menu of some configuration parameters. The menu will resemble the following:

	Current	Next	Max	Input
Number of device buffers	64	64	64	64
First legal physical page for device buffer	000000B	000000B		000000B
Spooling queue size in pages	4	4	6	4
Number of allocated areas	64	64	6144	64
Number of fast UDMA programs	0	0	2	0

Return: [\] or [.] Field info: [HELP] or [?]

The configuration parameters listed in this menu are:

Number of device buffers'	Number of device buffers.
First legal phys. page for device buffer	First physical page in memory for device buffers.
Spooling queue size in pages	Size of each spooling queue - a queue size of 2 pages can contain 10 queue entries and each additional page will increase queue length by approximately 7 new entries.
Number of allocated areas	Number of areas in memory reserved by the monitor call MON FIXC5 (MON 61). Should be larger than number of system LAMUs.
Number of fast UDMA programs	Number of RT-programs to use fast UDMA.

5.3 THE DISPLAY COMMAND

The **DISPLAY** command will show the current values of some configuration parameters which are not changeable.

The screen picture will resemble the following:

```
.................................................Current.....Max.....

Number of user RT-programs                          180
Number of user segments                             734
Number of terminals                                  25         132

Number of semaphores                                 50
Number of internal devices (total)                   30
Number of internal devices (block)                    2
Number of SIBAS processes                            12
Number of open file entries                          48
COSMOS spooling                                     Yes
Number of Telefix devices                            1

Work mode version (generation)                      000005B
Standard system                                     Yes
```

The configuration parameters listed in this command are:

Number of user RT-programs	Number of free RT-descriptions.
Number of user segments	Number of free segments.
Number of terminals	Number of terminals used.
Number of semaphores	Number of semaphores generated.
Number of internal devices (total)	Total number of internal devices (generated value).
Number of internal devices (block)	Number of block-oriented internal devices (generated value)
Number of SIBAS processes	Number of SIBAS processes generated.
Number of open file entries	Number of files open simultaneously (generated value).
COSMOS spooling	Indicates if COSMOS spooling is present.
Number of Telefix devices	Number of Telefix devices (generated value).
Work mode version	Version of work mode used when generating this system (for internal use by ND).
Standard system	Indicates if this SINTRAN is a standard system.

The **Max** value appearing for the *Number of terminals* parameter means maximum number of terminals supported by this system (generated value).

6. FILE SYSTEM

The following are now available:

- more specific information on error returns from file system monitor calls. The information is written to the terminal or to the error device (or both). This feature is controlled with the command @FILE-SYSTEM-ERROR-MESSAGES.

- a list of all files open on a directory. The list include both file name and which user (terminal) is using it.
  The command @LIST-ALL-OPEN-FILES is used for this.

7. SPOOLING

The maximum size of a spooling queue is reduced to 6 pages. Default size is unchanged - 4 pages.

The calculation of spooling queue length is as follows:
- the first two pages provide room for 10 queue entries
- each additional page will increase the queue length by approximately 7 entries

8. SINTRAN III L-VERSION, SYSTEM LAYOUT

8.1 SYSTEM LAYOUT ON DISK

File	Contents	Disk address	Size	Segment address
SINTRAN:DATA	Common Code Restart/Start	1B	77B	0B
MACM-AREA:DATA	Error Messages	100B	20B	30000B
	RT-Loader	137B	41B	30000B
SEGFILO:DATA	Common Code Restart/Start	200B	77B	30000B
	Resident Data	300B	55B	40000B
	System Segment	355B	3B	144000B
	Spooling Datafield	360B	1B	164000B
	Extended COMMON	361B	2B	26000B
	RPIT	363B	63B	32000B
	MPIT	446B	63B	32000B
	IPIT	531B	63B	32000B
	Segment Table	614B	20B	0B
	File System	634B	65B	26000B
	Command Segment	721B	65B	26000B
	SM Segment	1006B	44B	30000B
	SPIT	1052B	5B	26000B
	ND-500 Monitor	1057B	60B	40000B

8.2 PAGE INDEX TABLE LAYOUT

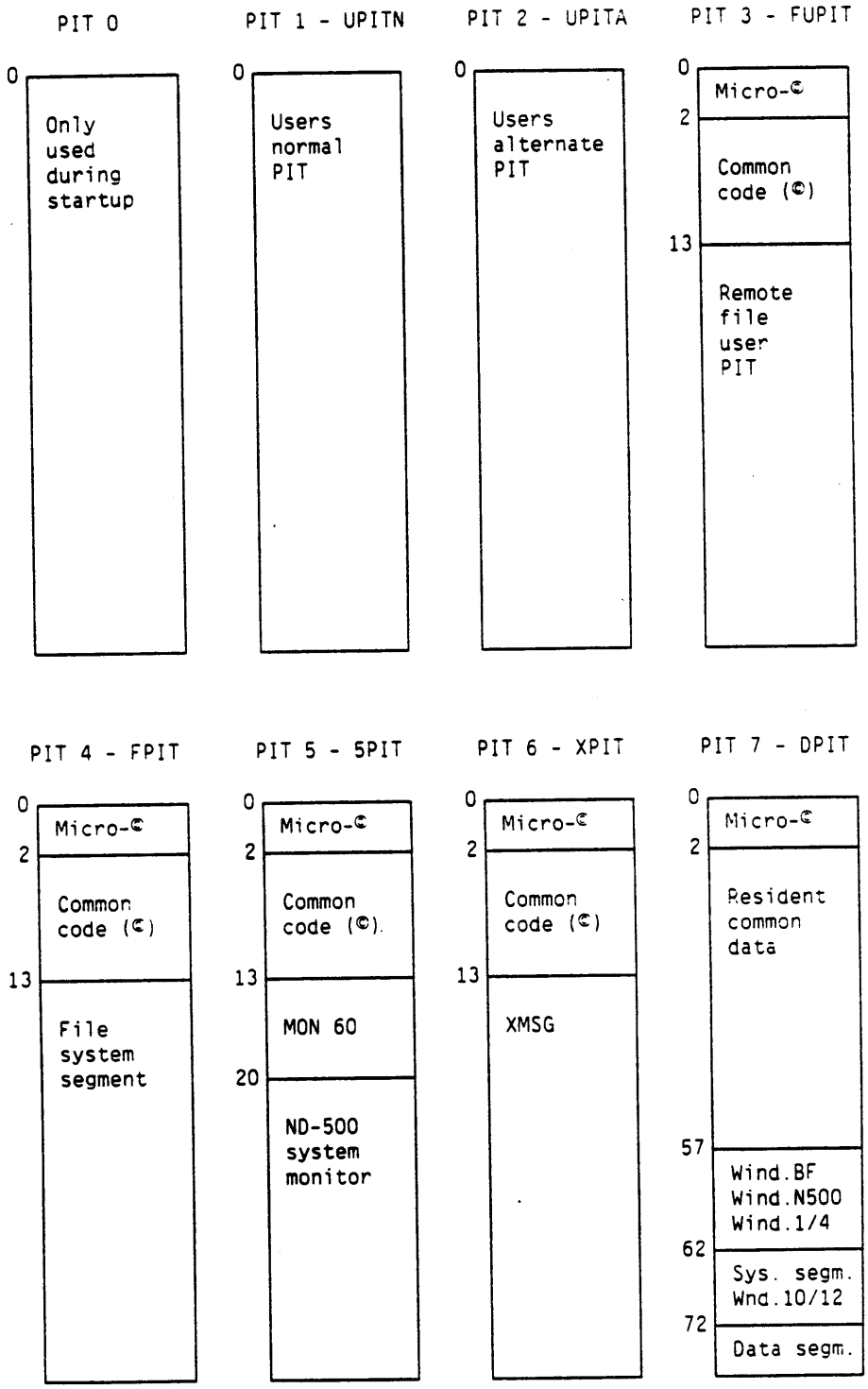

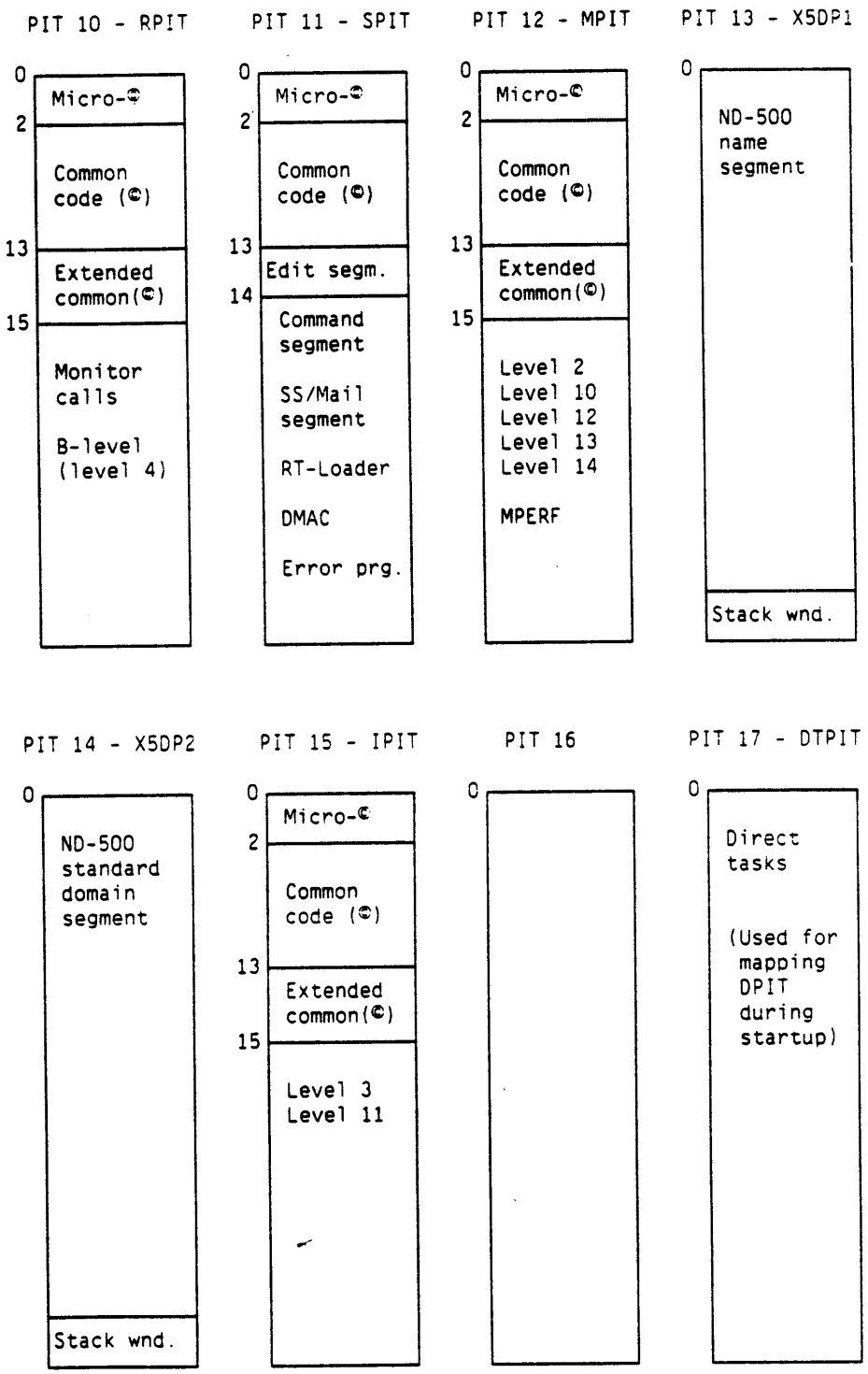
PIT 10 - RPIT
0
Micro-©
2
Common code (©)
13
Extended common(©)
15
Monitor calls
B-level (level 4)
PIT 11 - SPIT
0
Micro-©
2
Common code (©)
13
Edit segm.
14
Command segment
SS/Mail segment
RT-Loader
DMAC
Error prg.
PIT 12 - MPIT
0
Micro-©
2
Common code (©)
13
Extended common(©)
15
Level 2
Level 10
Level 12
Level 13
Level 14
MPERF
PIT 13 - X5DP1
0
ND-500 name segment
Stack wnd.
PIT 14 - X5DP2
0
ND-500 standard domain segment
Stack wnd.
PIT 15 - IPIT
0
Micro-©
2
Common code (©)
13
Extended common(©)
15
Level 3
Level 11
PIT 16
0
PIT 17 - DTPIT
0
Direct tasks
(Used for mapping DPIT during startup)

8.3 SYSTEM INCLUDED SEGMENTS

Segment No.	Name	Address Range	PIT	Description
2	S3IMAGE	0:175777	1	Image of common code, start/restart
3	S3CP	30000:177777	11	Command segment
4	S3RTL	30000:123777	11	RT-Loader segment
5	S3ERRS	144000:145777	7	System segment for error program
6	S3FS	26000:177777	4	File system segment
7	S3DMAC	64000:153777	11	DMAC segment
10	S3RTFIL	0:177777	2	Rtfil segment
11	S3ERRL	0: 17777	1	Error log segment
12	S3SFS	26000:177777	1	Save of file system segment
13	S3SCP	26000:177777	1	Save of command segment
14	S3ERRP	30000: 67777	11	Error program segment
15	S3BFLY	26000: 26000		Reserved for butterfly
16	S3SRPIT	32000:177777	1	Save of RPIT
17	S3SMPIT	32000:177777	1	Save of MPIT
20	S3SDT5	0:175777	14	ND-500 standard domains segment
21	S3NMS5	0:175777	13	ND-500 name tables segment
22	S3RFAC	26000:171777	3	Remote file access segment
23	S3DPIT	4000:131777	7	DPIT segment
24	S3SSGT	0: 37777	1	Save of segment table
25	S3IRPIT	32000:177777	1	Image of RPIT
26	S3IMPIT	32000:177777	1	Image of MPIT
27	S3ISGT	0: 37777	1	Image of segment table
30	S3SM5	40000:177777	5	ND-500 System Monitor segment
31	S3SSPD	164000:165777	7	Save of spooling data fields
32				Reserved, but not used
33				Reserved, but not used
34				Reserved, but not used
35	S3MPIT	32000:151777	12	MPIT segment
36	S3TAD	110000:133777	11	TADADM segment
37	S3RTD	0:177777	1	RT-Loader data segment
40	S3FUDRT	164000:173777	7	File user data segment for RT prog.
41	S3IMED	26000: 27777	1	Image of edit routines
42	S3ED	26000: 27777	11	Edit routines
43	S3PATCH	174000:177777	2	Used for patching purposes
44	S3IDPIT	4000:135777	1	Image of DPIT
45	S3ISYS	144000:151777	1	Image of system segment
46	S3S5PIT	26000: 37777	1	Save of 5PIT segment
47	S3RPIT	32000:141777	10	RPIT segment
50	S3I5PIT	26000: 37777	1	Image of 5PIT segment
51	S35PIT	26000: 37777	5	5PIT segment
52	S3SAVE	0:175777	1	Save of common code & start/restart
53	S3SDPIT	4000:135777	1	Save of DPIT
54	S3SSYS	144000:151777	1	Save of system segment
55	S3SERRP	30000: 67777	1	Save of error program
56	S3SRTC	30000: 67777	1	Save of RT-Loader code segment
57	S3SRTD	0: 25777	1	Save of RT-Loader data segment
60	S3SECOM	26000: 31777	1	Save of extended common
61	S3IECOM	26000: 31777	1	Image of extended common
62	S3SSM5	40000:177777	1	Save of ND-500 System Monitor
63	S3MEMTF	172000:172000		MEMTOF segment
64	S3ECOM	26000: 31777	10	Extended common segment

Segment No.	Name	Address Range	PIT	Description
65	S3SIPIT	32000:177777	1	Save of IPIT
66	S3IIPIT	32000:177777	1	Image of IPIT
67	S3IPIT	32000:103777	15	IPIT segment
70	S3SSM	30000:137777	1	Save service/mail segment
71	S3SM	30000:137777	11	Service/mail segment
72	S3SDMWD	2000: 11777	1	Save of disk mirroring WD segment
73	S3IDMWD	2000: 11777	1	Image of disk mirroring WD segment
74	S3SXMK	120000:177777	1	Save of XMSG kernel
75	S3SXROU	0:117777	1	Save of XMSG xrout segment
76	S3XMK	120000:177777	2	XMSG kernel
77	S3XROU	0:117777	2	XMSG xrout segment
100	S3SDNAM	164000:177777	1	Save of device name table
101	S3DNAM	164000:177777	7	Device name table
102	S3SXMFI	0:153777	1	Save of XMSG watchdog (XMFIDO)
103	S3XMFI	0:153777	1	XMSG watchdog (XMFIDO)
104	S3SNKSE	30000:177777	11	Save of NUCLEUS server
105	S3INKSE	30000:177777	11	Image of NUCLEUS server
106	S3SNKNA	0:177777	1	Save of NUCLEUS name server
107	S3INKNA	0:177777	1	Image of NUCLEUS name server
110	S3SU110	0: 77777	1	Save of ND-110 Microprogram
111	S3IU110	0: 77777	1	Image of ND-110 Microprogram
112	S3SU120	0: 77777	1	Save of ND-120 Microprogram
113	S3IU120	0: 77777	1	Image of ND-120 Microprogram
114	S3SERWC	0: 37777	1	Save of ERS Watchdog program
115	S3IERWC	0: 37777	1	Image of ERS Watchdog program
116	S3SERWD	0:157777	1	Save of ERS Watchdog data
117	S3IERWD	0:157777	2	Image of ERS Watchdog data
120	S3SPRMA	30000:177777	11	Save of Processor Manager server
121	S3IPRMA	30000:177777	11	Image of Processor Manager server
122	S3SEVMS	30000:177777	11	Save of Event Message server
123	S3IEVMS	30000:177777	11	Image of Event Message server
124	S3SBOPC	30000:177777	11	Save of Bopcom Server
125	S3IBOPC	30000:177777	11	Image of Bopcom Server
126	S3SMTSE	30000: 37777	11	Save of MT server
127	S3IMTSE	30000: 37777	11	Image of MT server

8.4 SYSTEM INCLUDED RT-PROGRAMS

PROGRAM	PURPOSE
1SWAP	Queuing program requests for swapping
5SWAP	Performs ABSTR in ND-100 for the ND-500/5000 Swapper
ACCRT	RT accounting
BAKnn	Background process for terminal (BAK01-BAK99)
BKnnn	- " - (BK100-BK128)
BCHnn	Batch process
BPTMP	Timeout program for background allocation system
COSPO	COSMOS-spooling server
DUMM2	Dummy program used by the spooling system
DUMMY	Dummy program to prevent empty execution queue
FDRT1	Transfer data between interface buffer and memory. Floppy formatting. (FLOPPY-1)
FDRT2	Transfer data between interface buffer and memory. Floppy formatting. (FLOPPY-2)
FIXRT	Monitor call/command FIXC execution
RTDIL	Buffer transfer program for DISC-ACCESS-LOG
RTERR	Output error messages
RTRFA	Does remote file access for RT-programs (COSMOS - remote file access)
RTSLI	Time slicer. Changes priority on all time sliced processes.
RTREC	Process to reconnect SINTRAN file system directory to DOMINO controller (after reboot of DOMINO or when BDIO switch to mirror pool).
RWRT1	Block data transfer. Activated from RFILE/WFILE/RPAGE/WPAGE for RT-programs
RWRT2	Open file from RT-programs
RWRT3	Block transfer on MAG-TAPE-1 (MAGTP)
RWRT5	VERSATEC-1 DMA
RWRT6	CDC-DMA LINK
RWRT7	MAG-TAPE-2
RWRT8	VERSATEC-2 DMA
RWRT9	FLOPPY-DISC 1
RWRT10	FLOPPY-DISC 2
RWRT11	LINE-PRINTER/VERSATEC -1 I/O
RWRT12	LINE-PRINTER/VERSATEC -2 I/O
RWRT13	Block-oriented internal device 1 Input
RWRT14	Block-oriented internal device 2 Input
RWRT15	Block-oriented internal device 3 Input
RWRT16	Block-oriented internal device 4 Input
RWRT17	Block-oriented internal device 5 Input
RWRT20	Block-oriented internal device 1 Output
RWRT21	Block-oriented internal device 2 Output
RWRT22	Block-oriented internal device 3 Output
RWRT23	Block-oriented internal device 4 Output
RWRT24	Block-oriented internal device 5 Output
RWRT25	HASP DMA 1 Input
RWRT26	HASP DMA 1 Output
RWRT27	HASP DMA 2 Input
RWRT28	HASP DMA 2 Output
RWRT29	HASP DMA 3 Input
RWRT30	HASP DMA 3 Output
RWRT31	HASP DMA 4 Input
RWRT32	HASP DMA 4 Output

RWRT33	HASP DMA 5 Input
RWRT34	HASP DMA 5 Output
RWRT35	HASP DMA 6 Input
RWRT36	HASP DMA 6 Output
RWRT41	
RWRT42	
SPRTn	Spooling programs (1-9)
SPRnn	Spooling programs (10-30)
STSIN	Initialize SINTRAN III and start systems RT-programs
TADnn	Background process for Terminal Access Device
TADAD	Administers connections to TADs from requesting users.
TERMP	Starts the user defined "clean-up" RT-program when RT-programs are aborted (if enabled)
TIMRT	Timer RT-program. Start timeout-routine for all devices in timer-table.
UDRnn	Performs Fast Universal DMA for user processes.
DIMWD	Used by the disk mirroring facility which is part of the
REVIVE	Fault Tolerant eXtension.
XROUT	XMSG server
XTRACE	XMSG server
XMFIDO	XMSG Watchdog
NKSERV	NUCLEUS server
NKNAME	NUCLEUS name server
ERS3WD	ERS/SINTRAN III Watchdog
PROMAN	DOMINO boot process
EVMESG	
BOPCOM	BOPCOM Server
MTSERV	NUCLEUS MTAD-server

9. SECURITY PRIMITIVES

Note that, if bit number 4 in the variable EXSECURITY is set (see page 19) disallowing login on users without a password, remote file access to files on such users is also not allowed.

10. ND-500/5000 MONITOR

The ND-500/5000 Background Monitor version J04 or later and the ND-500/5000 Swapper version K are intended to be used under SINTRAN III version L.

10.1 CHANGED INSTALLATION PROCEDURE

All software required to run an ND-500/5000 system is now delivered as one product: ND-500/5000 System Package for SINTRAN III/VSX, version L (ND-211305).
This product is delivered on one diskette to simplify installation.

The products concerned are: ND-500/5000 Monitor (background part)
ND-500/5000 Swapper
ND-500 Place Library

For a complete installation of these products, see the product description. An example of a complete installation of SINTRAN III (including these products) is given on pages 5-9 and in the SINTRAN III/VSX product description.

10.2 CONFIGURATION LIMITATIONS

The previous limitation of memory size to 32 megabytes is now changed to 128 megabytes. The change applies to ND-5000 systems only.

10.3 NEW COMMANDS TO SINTRAN III AFFECTING THE ND-500/5000

10.3.1 @AUTOMATIC-ND5000-ERROR-MESSAGE

This command is similar to the AUTOMATIC-ERROR-MESSAGE command in the ND-500/5000 Background Monitor, but applies to all processes running on the ND-500/5000.

When automatic error messages are enabled, all error returns from monitor calls in all processes will generate an error message.

As the output may become quite large, the command should only be used for debugging purposes.

10.4 MODIFIED COMMANDS TO THE ND-500/5000 BACKGROUND MONITOR

10.4.1 LOOK-AT-RESIDENT-MEMORY

This command is changed to accept physical memory addresses above 32 megabyte (up to 128 megabyte).

10.5 NEW COMMANDS TO THE ND-500/5000 BACKGROUND MONITOR

10.5.1 RESTART-PROCESS

The RESTART-PROCESS command which was removed in the J-version of the ND-500/5000 Monitor, has been reintroduced.

The purpose of this command is to restart a process which has stopped itself, or if the process is not stopped, to specify repeated execution of the process.

Parameter: <process name>

10.6 MODIFIED MONITOR CALLS - ONLY AVAILABLE ON ND-500

10.6.1 AttachSegment MON 440

This Attach Segment monitor call (440$_8$) is used to map a logical ND-500 data segment onto shared ND-100/ND-500 physical memory. The specified physical memory area must be defined in the "Not initialize page" table by use of the *CHANGE-TABLE command in the SINTRAN-Service-Program, or it must be in a LAMU area.
Note that you should not use the first pages of the multi-port memory (starting at "ND-500 page 0") for this.

10.6.2 5MTRANS MON 515

The 5MTRANS monitor call (515$_8$) is used for fast disk transfer from the ND-500.

In the 5MTRANS monitor call function Disk transfer, parameter number 5 <disk identifier>, subparameter function, may now take two extra values:

<disk identifier> bits 16-31 : logical device number
bits 6-8 : unit number
bits 0-5 : function:
0 = read
1 = write
6 = read without clearing cache
(only applicable if cache-inhibit is set for this area)
7 = write without "dump dirty"
(write from cache-inhibit area)

10.7 NEW MONITOR CALLS (ND-500)

10.7.1 EUSEL MON 300

MON EUSEL is now available for ND-500 programs.

10.7.2 NUCL MON 347

MON NUCL is available for ND-500 programs.

10.7.3 RWSEG MON 350

MON RWSEG is available for ND-500 programs.

11. XMSG

11.1 CHANGED INSTALLATION PROCEDURE

XMSG is now delivered as part of SINTRAN III and installed automatically.

This means that it must not be installed separately.

Further, any commands used to initialise XMSG to the system should be removed from any mode file run after installing SINTRAN III and commands used to load or initialise XMSG must be removed from the HENT-MODE file run after a cold start.

Make certain that you use the correct version of the XMSG-Command program in your XMSG-START file (the M-version).

Note that XMSG-Command and the XMSG-START files are copied to user SYSTEM during installation.
This means that you must either copy the files from user SINTRAN and user UTILITY, or change the file specification used in LOAD-MODE:MODE.

You can also remove most of the XMSG files you had from the previous version - these files are found on user UTILITY:

```
XMSG-COMMAND-L:PROG
XMSG-FIDO-L:PROG
XMSG-HDLC-TEST-L:PROG
XMSG-IN-L:PROG
XMSG-INIT-L:MODE
XMSG-KERNEL-L:BPUN
XMSG-LOAD-L:MODE
XMSG-PL-VALUES-L:INCL
XMSG-POFTABS-L:SYMB
XMSG-SYMBOL-L:SYMB
XMSG-SYS-DEF-L:SYMB
XMSG-SYSTABS-L:SYMB
XMSG-VALUES-L:SYMB
XMSG-XROUT-L:BPUN
```

12. NOTS - NET/ONE TERMINAL SERVER

12.1 LOGGING FACILITIES

The commands @RT-PROGRAM-LOG, @START-PROGRAM-LOG, @STOP-PROGRAM-LOG are now available on terminals connected to a NOTS controller (Net/One).
In such cases, device no. 1 (the console terminal) is used as clock.

13. MTAD - MAILBOX TERMINAL ACCESS DEVICE

The commands @RT-PROGRAM-LOG, @START-PROGRAM-LOG, @STOP-PROGRAM-LOG are now available for MTAD devices.
In such cases, device no. 1 (the console terminal) is used as clock.

14. MEMTOF

MEMTOF (MEMory TO Floppy dump) for the VSX-version is a part of SINTRAN III (installed as part of SINTRAN), and can be run by a simple procedure:

- Stop the system (if it is not stopped already) by pressing the STOP button on the panel.
- Dump the register block (use the OPCOM command 0<17RD).
- Dump the internal registers (use the OPCOM command IRD).
- Press the MCL (master clear) button on the panel.
- Type 15! (just 15 and an exclamation mark - without a return).

  MEMTOF will then start, and ask you to insert formatted diskettes (one after another) in floppy unit 0 of floppy controller 1.

  When the dump is finisned, remove the diskettes, label them, and enclose the printout of the register contents when you send it to ND service.

  Also remember to copy the file(s) SYMBOL-2-LIST:LIST (and, if your system is an ND-500, N500-SYMBOLS:SYMB) found on user SYSTEM to a diskette and enclose this as well. These files contain information about your configuration and where (within SINTRAN III) different options specific to your configuration are found.

- If you want to resume operations of the system, do the following:
  - Press the MCL button on the panel.
  - Type 20! (just 20 and an exclamation mark - without a return).

  This will simulate a powerfail restart of SINTRAN III.

15. NUCLEUS

15.1 OVERVIEW

NUCLEUS is meant to be used for all Norsk Data System applications requiring interprocess-communication. The processes may for instance be one server with several clients. NUCLEUS cannot be used for inter-computer communication.

All processes communicating via NUCLEUS have to be within the same computer. By computer is meant one or several main CPUs and DOMINO controllers with access to the same physical memory and OCTOBUS. This is illustrated below.

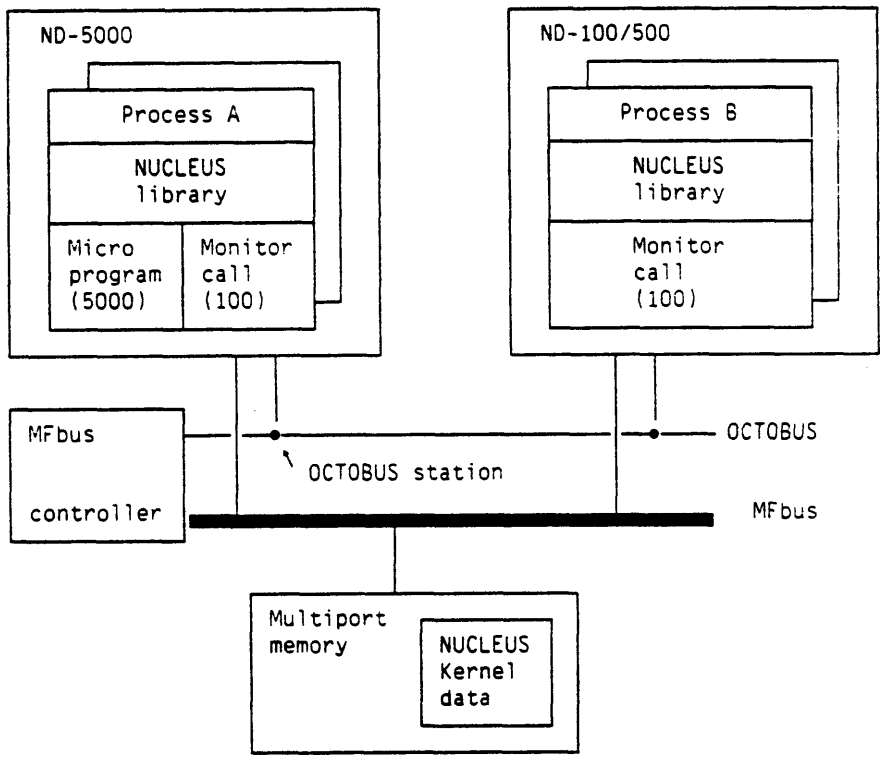

15.2 NUCLEUS KERNEL

Parts of physical memory are reserved for the data structure used by NUCLEUS.

NUCLEUS has slow and fast services. Slow services are those which are not time critical, or are of such a nature that they need time to be carried out anyhow.

For the ND-5000, the time critical NUCLEUS calls nkMove, nkSend, nkReceive and nkGetInfo are microcoded to achieve required performance. All other NUCLEUS calls are executed in ND-100.

For ND-500, the time critical NUCLEUS calls are not microcoded. These calls are executed in ND-100 (on level 12). The NUCLEUS library in ND-500/5000 present a standard NUCLEUS interface for applications.

15.3 COMMUNICATION CONCEPTS

Communication between processes in NUCLEUS is based on MESSAGES and PORTS. These lie in physical memory shared between the CPUs (NUCLEUS Kernel).

Message
A message consists of a physical buffer for data, and a header containing for example buffer descriptor and link to other messages.

Port
A port contains for example an identification of the port owner and a pointer to received messages. Messages can be linked to a port, where they are queued in the same sequence as they arrive.

Home port
Every message has a home port. This is supplied when a message is created. It is used as the default port to receive a message, and is needed when a process has to answer an arbitrary process (for example clients & server).

Sender port
A message may have a sender port. This is supplied when you send the message, and is used to specify who sent the message. Use nkGetInfo to check for who sent it, especially useful for servers.

Send reference
In order to send a message to a port, a send reference (to the port) must exist. The send reference is used by NUCLEUS for access checking.

Slow and fast services
Creation of ports and messages are the slow services, while message passing is fast. The slow functions are not needed as often as the fast ones, as the same message may be reused without being deallocated. Only the user-data needs to be changed between each message passing (fast services).

Port name
A port is uniquely identified by a symbolic port name. Processes may refer to the port by the name if they have access rights. Names cannot be abbreviated.

15.4 PROTECTION IN NUCLEUS

15.4.1 PROCESSES

Processes are divided into two categories: System processes and public processes.

System processes are:

- Processes running in DOMINO processor.
- RT-programs.
- Background programs running as user System and RT.

Background programs are System processes if the user running the program, originally logged in as System.

System processes are not individually restricted. Only the total amount of resources (number of descriptors and message buffer space) is limited. The amount may be changed by means of the S3-Config program.

Public processes
Any process which is not a System process, is a public process.

15.4.2 RESTRICTED RESOURCES

Descriptors
For each create-port, create-message, open-port or open-return-port a slot in the descriptor table is reserved. The number of descriptors for each public process is restricted.

Buffer space
Message buffers are allocated in a common buffer pool. For each message a process creates, a fixed amount (header, fragmentation) plus the number of bytes in the create-message call is subtracted from the allowed quota for the process.

The allowed amount of resources (number of descriptors, buffer space) common to all public processes can be set/changed on SINTRAN save areas by means of the SINTRAN configuration program.

A message belongs to the user who created it. If a user creates a message, sends it away, logs out, logs in again, and the message still exists, it will still be on this users account.
Public processes cannot bypass the resource restrictions by logging out and in again.

If someone tries to return a message to a homeport that no longer exists (the user may have logged out), the message will be deleted, and subtracted from the owners account.

15.4.3 NAMING

Only system processes can create names.

Processes which do not have access rights to a named port, cannot open a send reference to it. Access rights are determined by the access parameter in the create-port-name call.

Only the owner can delete a name.

The "name" is a string of 32 bytes.

Any combination of alphanumeric characters are allowed as a port name. For instance "NIL" is a legal name.

One port may be given several names.

Different ports cannot have equal names.

15.5 CONFIGURATION OF NUCLEUS

NUCLEUS will have standard configuration defined at SINTRAN generation time. Changes in NUCLEUS configuration can be done by means of a new function in SINTRAN monitor call MON CONFG. The SINTRAN configuration program are updated to handle reconfiguration of NUCLEUS, a description of this is found on page 39

15.6 NUCLEUS IN ND-100

NUCLEUS in ND-100 consists of code on SINTRAN page tables MPIT, DPIT, RPIT and COMMON area. In addition NUCLEUS server executes as an RT-program on SINTRAN page table SPIT. The NUCLEUS name server executes as an RT-program on user page tables. Both servers are integrated with SINTRAN. During start-up of SINTRAN the servers are started by SINTRAN itself.

15.7 NUCLEUS IN DOMINO CONTROLLER

Starting NUCLEUS in DOMINO is invisible for applications. NUCLEUS in the DOMINO controller is able to handle processes with different priority.

15.8 NUCLEUS LIBRARY

The NUCLEUS Library (ND-250295C) is available for programs using the NUCLEUS system. PLANC routine calls all have an outvalue, but no invalue.
For example: ROUTINE VOID,INTEGER4(....

15.8.1 NKCREPORT - CREATE PORT

Create a new port. The creating process becomes the port owner.

Syntax:
nkCrePort (<function>,<events>,<port>)

Parameters:
<function> = 0 Abort not delayed. **nkfNoDelayAbort**
= 1 Delay abort. **nkfDelayAbort**
<events> ≠ 0 If ND-100 or ND-500: The process will be activated when the first message arrives at the empty port.
If DOMINO: Events will be used together with tne event system in DOMINOS.
= 0 The process will not be activated.
<port> = Port number (return parameter).

Rules:
1. The subfunction **nkfDelayAbort** (function=1) is available for System processes only.
2. If a port is created with the subfunction nkfDelayAbort, then the process that owns the the port will not be aborted until all messages with this port defined as homeport are returned to the homeport.

PLANC syntax:
```
ROUTINE VOID, INTEGER4         & status
            ( INTEGER4,        & function
              INTEGER4,        & events
              INTEGER4 WRITE)  & port
            : nkCrePort
```

15.8.2 NKCREPORTNAME - CREATE PORT NAME

Assign a name to a port, so that other processes can refer to it.

Syntax:
nkCreName (<function>,<access>,<name>,<port>)

Parameters:
<function> = 0
<access> = 0 Only System processes have access to this port.
= 1 System and public access.
<name> = Symbolic name of port.
<port> = Number of port to be assigned a name.

Rules:
1. The call is allowed for System processes only.
2. Only the owner of the port is allowed to use this call.
3. One port may have several names.
4. The "name" is a string of 32 bytes.
5. Any combination of alphanumeric characters is legal as port name.
6. Different ports cannot have the same name.

PLANC syntax:
```
ROUTINE VOID, INTEGER4       & status
            ( INTEGER4,      & function
              INTEGER4,      & access
              BYTES POINTER,& name
              INTEGER4 )     & port
            : nkCreName
```

15.8.3 NKOPENPORT - OPEN PORT

This service will be used to get a send reference to a named port.

Syntax:
nkOpenPort (<function>,<name>,<sendreference>)

Parameters:
<function> = 0
<name> = Symbolic name of port.
<sendreference> = Send reference number to port.

Rules:
1. A public process can open a port only if the access to the port (set in nkCreName call) is allowed both for System and public processes.
2. Processes using this call must know the name of the port.

PLANC syntax:
```
ROUTINE VOID, INTEGER4          & status
            ( INTEGER4,         & function
              BYTES POINTER,    & name
              INTEGER4 WRITE) & send reference
            : nkOpenPort
```

15.8.4 NKOPENRETURNPORT - OPEN RETURN PORT

Open a send reference to the home port or last sender port of a message.

Syntax:
nkOpenReturnPort (<function>,<message>,<sendreference>)

Parameters:
<function> = 0 Reference to the home port of the message.
= 1 Reference to the last port the message was sent from.
<message> = Message number.
<sendreference> = Send reference to home port or last sender port (return parameter).

Rules:
1. Only the owner of the message is allowed to use this call.
2. A receive must be performed on the message.
3. A message that is sent, but not received, has no owner.

PLANC syntax:
```
ROUTINE VOID, INTEGER4         & status
            ( INTEGER4,        & function
              INTEGER4,        & message
              INTEGER4 WRITE)  & send reference
            : nkOpenReturnPort
```

15.8.5 NKDELNAME - DELETE PORT NAME

Delete the symbolic name of a port. The port itself is not removed.

Syntax:
nkDelName (<function>,<name>,<port>)

Parameters:
<function> = 0
<name> = Symbolic name of the port.
<port> = Number of the corresponding port.

Rules:
The symbolic name of a port can only be deleted by the owner of the port. Correspondence between port name and port number are checked.

PLANC syntax:
```
ROUTINE VOID, INTEGER4         & status
            ( INTEGER4,        & function
              BYTES POINTER,   & name
              INTEGER4)        & port
            : nkDelName
```

15.8.6 NKCREMESSAGE - CREATE MESSAGE

Allocate a message buffer in a contiguous area of physical memory. It can be written into and read from, using the fast services nkMove.

The creating process owns and has exclusive access to the message until it is sent to a port. The access to the message is lost when it is sent to another process.

The homeport must be a port owned by the creating process.
Zero may be supplied to indicate dummy home port, meaning that the message will be lost and deallocated if it is sent to the home port.

Syntax:
nkCreMessage (<function>,<bytes>,<homeport>,<message>)

Parameters:
<function> = 0
<bytes> = Maximum number of bytes in the message.
<homeport> = Home port number.
<message> = Message number (return parameter).

PLANC syntax:

```
ROUTINE VOID, INTEGER4          & status
            ( INTEGER4,         & function
              INTEGER4,         & bytes
              INTEGER4,         & homeport
              INTEGER4 WRITE)   & message
            : nkCreMessage
```

15.8.7 NKMOVE - READ OR WRITE A MESSAGE

Write user data into the message buffer of a message from index <mesdispl> and upwards. The write operation terminates either when all user data is written, or when the message buffer becomes full.

Read data from the message buffer, starting from the message displacement. The reading terminates either when the whole message has been read, or the user data area becomes full.

Syntax:
nkMove (<function>,<message>,<displacement>,<data>,<bytes>)

Parameters:

<function> = 0 Read message. **nkfRead**.
= 1 Write message. **nkfWrite**.
= 2 Insert. Same function as Write, but the byte pointer is not set if the message is smaller than the old message. **nkfInsert**.

<message> = Number of the message to be read/written.
<displacement> = Displacement within message buffer.
<data> = User data to be read/written (call/return parameter).
<bytes> = Number of bytes actually read/written (return parameter).

Rules:

1. The message buffer is identical to the declaration: Bytes : message(0:msglngth-1).
2. In the ND-100 maxindex and minindex in the byte pointer must be in the range 0-64511. Displacement must be an even number for ND-100.
3. "NIL" cannot be used as an empty message. An empty message can be specified as an empty byte string, i.e. : ADDR ' '

PLANC syntax:

```
ROUTINE VOID, INTEGER4          & status
            ( INTEGER4,         & function
              INTEGER4,         & message
              INTEGER4,         & displacement
              BYTES POINTER     & data
              INTEGER4 WRITE)   & bytes
            : nkMove
```

15.8.8 NKSEND - SEND MESSAGE

Send a message to a port, provided that the sending process has access to the message. The process then loses its access to this message. The message is appended to the end of the message queue at the destination port.

If the queue at the destination port is empty, then the message will activate the process which created the destination port, if so specified at create time.

Syntax:
nkSend (<function>,<port>,<sendreference>,<message>)

Parameters:
<function> = 0
<port> = Port number to identify who sent the message (Last port). New sender port is not set if port number equal zero.
<sendreference> = Send reference to port to receive the message.
<message> = Message number of the message to be sent. If the message number is equal to zero this call will not send a message, but perform a restart of the process of the destination port.

PLANC syntax:
```
ROUTINE VOID, INTEGER4    & status
            ( INTEGER4,   & function
              INTEGER4,   & port
              INTEGER4,   & send reference
              INTEGER4)   & message
            : nkSend
```

15.8.9 NKRECEIVE - RECEIVE MESSAGE

The first message in the queue is received. If the queue was empty, message number zero is returned. The receiving process gets access to the message, and may read from and write into it.

Syntax:
nkReceive (<function>,<port>,<message>,<bytes>)

Parameters:
<function> = 0
<port> = Port number. Identifies the port from which the message will be received.
<message> = Message number (return parameter).
<bytes> = Number of bytes written into the message buffer by the sending process It is equal or less than the message size. You can use **nkGetInfo** to get the message size and who sent it (return parameter).

PLANC syntax:

```
ROUTINE VOID, INTEGER4         & status
            ( INTEGER4,        & function
              INTEGER4,        & port
              INTEGER4 WRITE,  & message
              INTEGER4 WRITE)  & bytes
            : nkReceive
```

15.8.10 NKGETINFO - GET INFO

Get information on the specified message or port.

Syntax:
nkGetInfo (<function>,<message or port or sendreference>,<value>)

Parameters:

<function> = 0 : **nkfSize**. Maximum message size.
= 1 : **nkfLength**. Used message length.
= 2 : **nkfHomeid**.
If message: Home port identifier.
If port: Port identifier.
If send reference: Destination port identifier.
= 3 : **nkfLastid**. Identifies the last port tnat sent this message.
= 4 : **nkfBuffer**. Buffer address of the message in NUCLEUS kernel.
= 5 : **nkfQueue**.
0 : port has no message.
1 : port has one or more messages.

<function> = 0, 1, 4 , 5 returns 32 bits(4 bytes).

<function> = 2 and 3 returns 64 bits (8 bytes). For future NUCLEUS extension, all applications must be prepared for returning 128 bits (16 bytes).

<function> = 0, 1, 3, 4 can be used for **messages** only.

<function> = 5 can be used for **ports** only.

<message or port or sendreference> = Message number.
= Port number.
= Send reference number.

<value> = Message, port or send reference information (return parameter).

Rules:

1. Only the process having access to the message, port or send reference is allowed to use this call.
2. If <function> = 2 or 3 the identifiers returned can only be used to compare other identifiers returned from nkGetInfo. Do not extract any other information.

PLANC syntax:
```
ROUTINE VOID, INTEGER4       & status
            ( INTEGER4,      & function
              INTEGER4,      & message or port or send reference
              BYTES POINTER) & value
            : nkGetInfo
```

15.8.11 NKCLOSE - CLOSE PORT, MESSAGE OR SENDREFERENCE

Close a port, message or send reference.
Closing a port results in deletion of the port number and all of the ports symbolic names. If there are messages that the port has not yet received, the messages will be closed according to the rules for closing a message given above.
Closing a send reference. The send reference is closed.

Syntax:
nkClose (<function>,<port or message or sendref.>)

Parameters:
<function> = 0

```
<port            = Port number to be closed. If the port is named, all
or                 names defined with the call nkCreName is removed.
message          = Message number to be closed.
or
sendreference>   = Send referece to be closed.
```

Rules:
1. A message can only be closed by the process currently having access to the message.
2. Port or send reference can only be closed by the process which owns the port/send reference

PLANC syntax:
```
ROUTINE VOID, INTEGER4  & status
            ( INTEGER4, & function
              INTEGER4) & message or port or send reference
            : nkClose
```

16. DISK MIRRORING

To install the E-version of Disk Mirroring (ND-210855E), follow the instructions given on the program description sheets.

Note that MON 151 (MON ABSTR) is not allowed on the mirror disk.

17. ERS/SINTRAN III WATCHDOG

17.1 GENERAL DESCRIPTION

The Watchdog is an RT-program which receives error information written to internal device number 276B and converts this information to error reports printed on the error device.

In version B of the ERS/SINTRAN III Watchdog included in the L-version of SINTRAN III, the previous restriction of not running the FTX Error Logger together with the ERS/SINTRAN III Watchdog has been removed; thus the ERS/SINTRAN III Watchdog can run in parallel with the FTX Error Logger (the RT-program FTXWD).

Even if it is possible to run the ERS/SINTRAN III Watchdog together with the old Error Program (the RT-program RTERR), this is not recommended, as the output printed on the error device may be somewhat confusing (duplicated messages). The Watchdog completely replaces RTERR and, as RTERR is initially stopped, it should not be started.

After a message has been reported ten times in succession, further reporting of the message is suppressed.

If a new message file is installed, it should be placed under users ND-OPERATIONS or SYSTEM with file name ER-S3WD-DESC-Bxx:EDAT.

17.2 REPORT LAYOUT

The layout of a report from the ERS/SINTRAN III Watchdog is as follows:

```
severity * SSI:EC * date time * RT-program.P-register * sysname.sysno
           product name
           event text
           description parameter
           description parameter
              :           :
```

```
severity     : the severity of the reported event
               (Info/Warning/Error/Fatal)
SSI          : SSI code of the event
EC           : Event Code of the event
date         : the date when the event was read by the watchdog
               (on the form YYYY-MM-DD)
time         : the time when the event was read by the watchdog
               (on the form HH:MM:SS)
RT-program   : the name (or RT-description address) of the RT-program
               causing the event
P-register   : the P-register (program counter) of this RT-program
sysname      : the system name (as defined in XMSG)
sysno        : the system number (as defined in XMSG)
product name : the product name
event text   : the event text (for example error message)
description  : a description of the following parameter value
parameter    : parameter value
```

18. AFFECTED SUBSYSTEMS

ND-500/5000 System Package	for SINTRAN III/VSX version L version B of the ND-500/5000 System Package (ND-211305) contains the following products: - ND-500/5000 Background Monitor - ND-500/5000 Swapper - ND-500/5000 Place-Library for use under version L of SINTRAN III.
ND-500/5000 MONITOR	only version J or later of ND-500/5000 Background Monitor (ND-210333) may be used when running SINTRAN III version L.
ND-500/5000 SWAPPER	only version K of ND-500 /5000 Swapper (ND-211034) may be used when running SINTRAN III version L.
XMSG	XMSG is part of SINTRAN III in the L-version and must not be installed as a separate product.
COSMOS BASIC MODULE	version F of COSMOS Basic Module (ND-210374) is required when running XMSG which is now part of SINTRAN III version L.
SINTRAN III Configuration	version E of the SINTRAN III Configuration program (ND-211024) is required when configuring the L-version of SINTRAN III.
NOTS Service	version B of the NOTS Service program (part of ND-211024) is used to set or change the configuration of Net/One terminals.
ERS/SINTRAN III Watchdog	the SINTRAN III Watchdog of the Event Report System is part of SINTRAN III in the L-version and must not be installed as a separate product.
BACKUP-MANAGER	version A of the Backup Manager (ND-210337) is designed to ease the task of taking backup.
BACKUP-SYSTEM	version H of the Backup system (ND-210337) is required to handle files with file index > 255 (more than 256 files per user). Version I is required to handle SCSI streamer tape drives. Revision I05 of the Backup System and revision I05 of the DMA server are required to handle SCSI optical disks and magnetic tape drives.
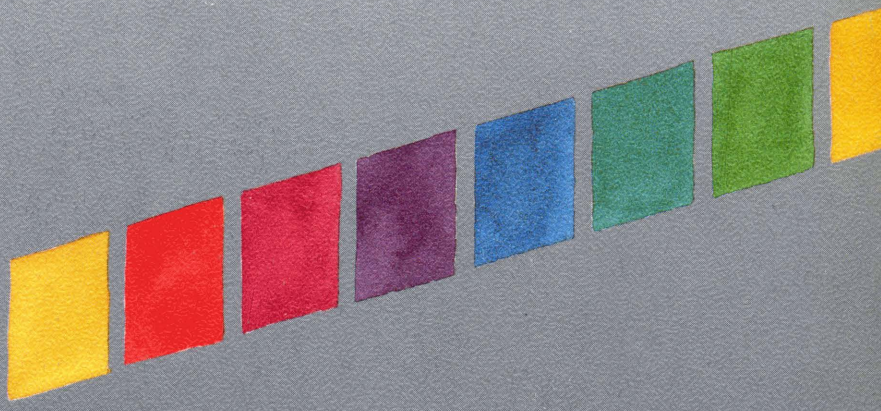
DISK-MIRRORING	only version E of Disk Mirroring (ND-210855) may be used when running SINTRAN III version L.
FILE-MANAGER	versions A or B of the File Manager (part of ND-210518) will not handle files with file index > 255 (more than 256 files per user). Version C of the File Manager (ND-211075) will handle this problem.
FILE-SYSTEM-INVESTIGATOR	version 0 of the File System Investigator (part of ND-210628) is required to handle files with file index > 255 (more than 256 files per user).
LINKAGE-LOADER	version H of the Linkage Loader (ND-210319) is required to handle communication with RT-programs due to the changed RTFIL format.
ND-LINKER	the ND-LINKER (ND-211224, version A) is required to handle the new domain files (as opposed to the old ND-500 domains built by the Linkage-Loader).
CONVERT-DOMAIN	the conversion program, CONVERT-DOMAIN (ND-211229) is used to convert an "old" domain (built by the Linkage-Loader and stored on a triple of files) to a domain file without having to reload the domain.
PERFORMANCE-MONITOR	only version B of the Performance Monitor (ND-211074) may be used when running SINTRAN III version L.
SYMBOLIC-DEBUGGER	version F of the Symbolic-Debugger (ND-210336) can be used when running SINTRAN III version L to debug RT-programs. Version H is required to handle ND-500 domains stored on domain files (by the ND-Linker).
LED-DEBUGGER	revision B02 of the LED-Debugger (ND-211157) is required to handle ND-500 domains stored on domain files (by the ND-Linker).
TELEFIX-LOCAL	version C01 of Telefix-Local (ND-210775) is required.
USER-ENVIRONMENT	version B of User Environment (ND-210518) must be changed slightly to run under SINTRAN III version L. Version C of User Environment offers a highly improved performance when used under the L-version of SINTRAN.