NORD

COMPUTER SYSTEMS

NORD-20

VOLUME I

LOGIC DIAGRAMS AND LISTS

A/S NORSK DATA-ELEKTRONIKK

Erich Mogensøns vei 38, Oslo 5

NORD-20

VOLUME I

LOGIC DIAGRAMS AND LISTS

TABLE OF CONTENTS

TITLE	CARD NO.	DRWG.NO.
NORD 20 SYSTEM		2B29
MEMORY CONTROL	2002	3A02
LOAD MODULE	2009	3A09
REGISTERS & ARITHMETIC	2010	3A10
TIMING	2011	3A11
DECODING	2012	3A12
CONTROL	2013	3A13
INTERFACE	2014	3A14
MULTI-DEVICE CONTROL	2015	3A15
SYNCHRONOUS MODEM CONTROL	216	3A16
ACM/I/O	217	3A17
ACM/DCH.	2018	3A18
DUAL DUPLEX S.S. BUFFER	2019	3A19
DUPLEX REA/PFA BUFFER	2020	3A20
QUAD.LINE DRIVER/RECEIVER	221	3A21
X-MITTER	222	3A22
RECEIVER	223	3A23
TTL DIGITAL IN/OUT	224	3A24
TIMING UNIT	225	3A25
I/O BUFFER FOR CDC 1700	228	3A28
I/O CHANNEL	229	3A29
IR BUFFER & MPR	2030	3A30
IOTD BUFFER	2032	3A32
IOTE DISTRIBUTOR NORD-20	2033	
STORAGE CONTROL 2B/CDC 1700	7224	3B24
ADDR.& DATA REG. 2B-CDC 1700	7225	3B25
ADDR & DATA REG. 2B-CDC 1700	7226	3B26
INTERFACE NORD-2B TIL WIRETEST	7227	3B27
TTY MODEM BUFFER	8214	5A14
POWER FAILURE & RTC	8215	5A15
CARD READER BUFFER	8219	5A19
NORD-20 MAINTENANCE CONTROL	8233	5A33
NORD-20 MAINTENANCE INTERFACE	8234	5A34
LISTS		

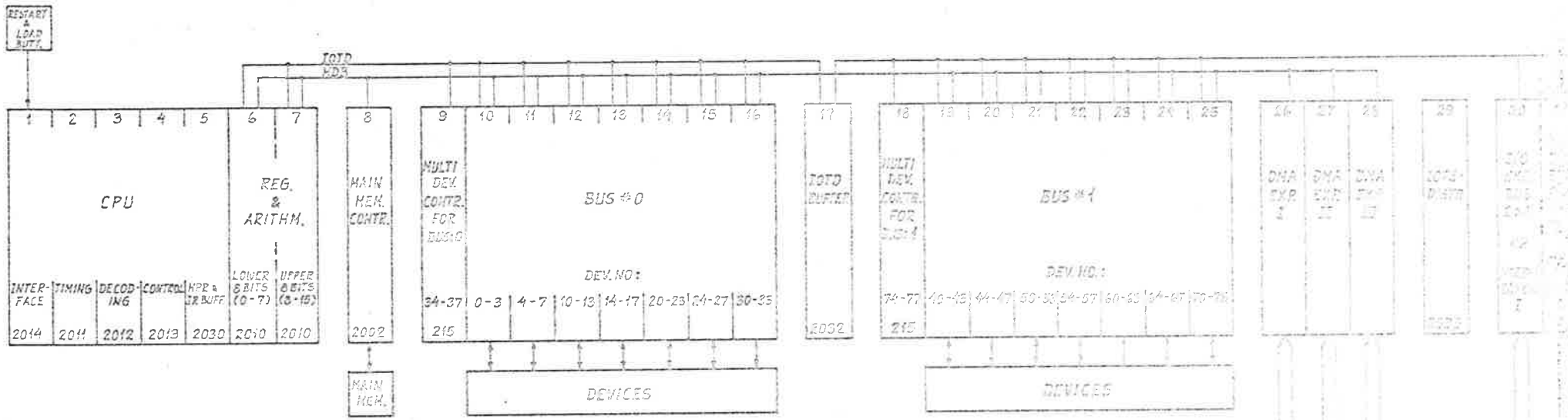

	NO-NO	TYPE	QTY	DESCRIPTION	
BASIC CPU			1	STANDARD CABINET	
			1	CARD CAGE (FULLY WIRED)	
			2	POWER SUPPLIES (5V & 10V)	
			1	PLUGPANEL COMPLETE	
		2014	1	INTERFACE	
		2011	1	TIMING	
		2012	1	DECODING	CPU
		2013	1	CONTROL	
		2030/I	1	IR BUFFER	
		2010	2	REG. & ARITHM.	
		215	1	MULTI DEV. CONTR.	
OPTIONAL		2002	1	MEM. CONTROL	
			1	COMPLETE MEM. CASE	
				CMI CONTROL MODULE	
				CMI STORAGE MODULE	
		2030/II		MEM. PROTECTION	
		2009		LOAD MODULE	
		216		SYNCHRONOUS MODEM INTERFACE	
		217		ACH I/O > ACH	
		2018		ACH DEV.	
		219		DUAL DUPLEX S/G BUFFER	
		220		DUPLEX PTR/PTP BUFFER	
		221		QUAD LINEDRIVER/RECEIVER	
		222		X-MITTER	
		223		CDC RECEIVER	
		7224		STOR. CONTR.	CDC 1700
		7225		ADDR/DATA REG. I	INTERFACE
		7226		" " " II	
		227		PLUS/DW COM W.	
		228		CDC 1700 I/O BUFF.	
		229		NORD-1 TYPE I/O CHANNEL	
		2032		IOTD BUFFER	
				DMA EXPANDER	
				I/O EXPANDER	
				IOTD DISTRIBUTOR	
				RTC & POW. FAIL	
		224		TTL DIG. IN/OUT	
		225		REAL TIME UNIT	

NO-NO	TYPE	QTY	DESCRIPTION

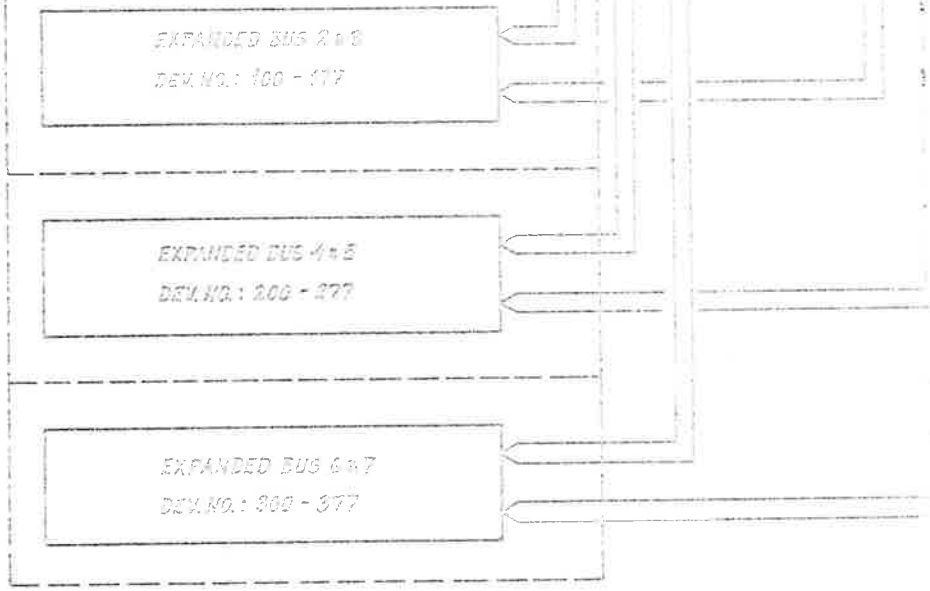

NORD-10 SYSTEM

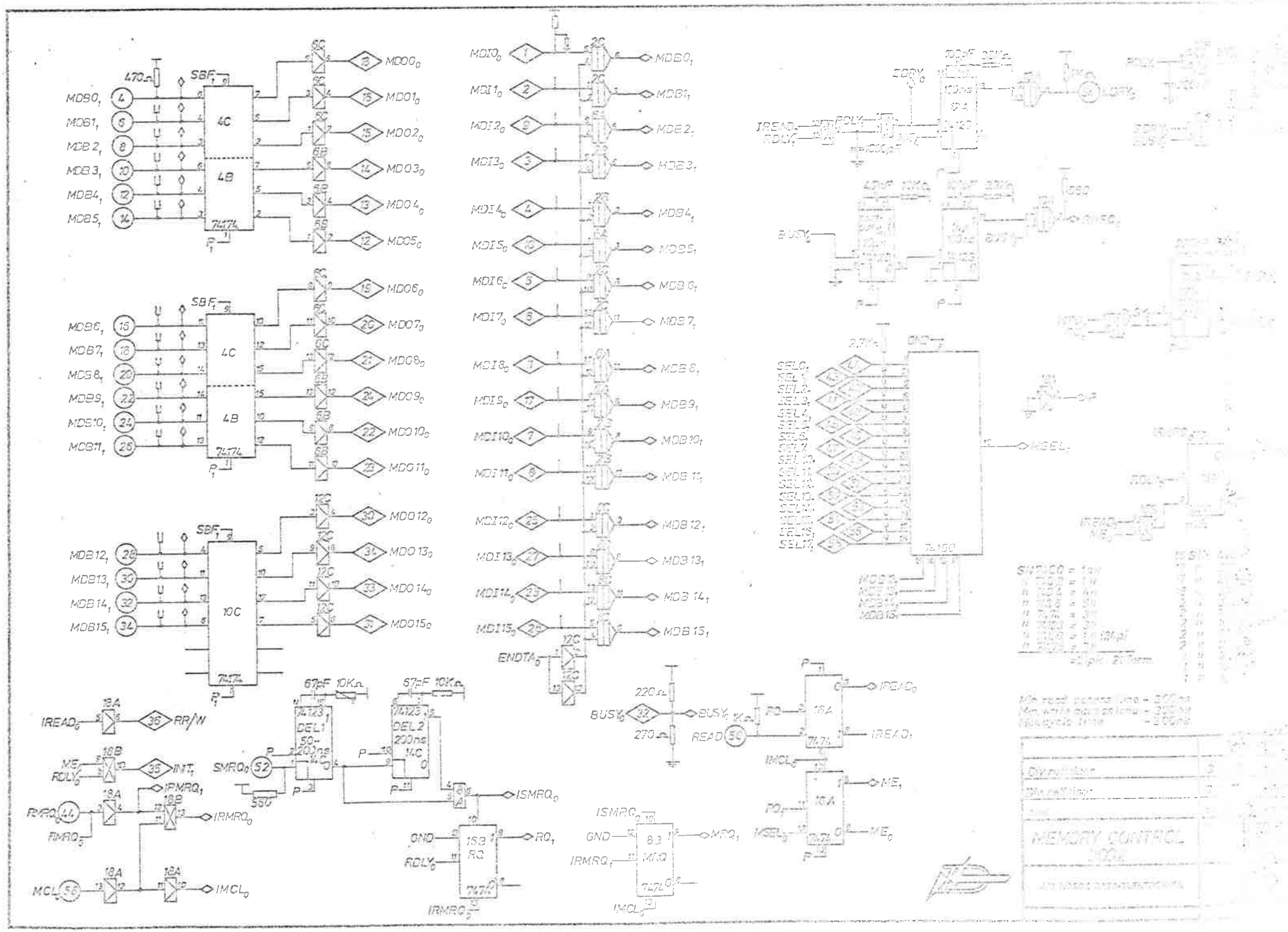
MEMORY CONTROL
MDB0
MDB1
MDB2
MDB3
MDB4
MDB5
MDB6
MDB7
MDB8
MDB9
MDB10
MDB11
MDB12
MDB13
MDB14
MDB15
MDI0
MDI1
MDI2
MDI3
MDI4
MDI5
MDI6
MDI7
MDI8
MDI9
MDI10
MDI11
MDI12
MDI13
MDI14
MDI15
MDO0
MDO1
MDO2
MDO3
MDO4
MDO5
MDO6
MDO7
MDO8
MDO9
MDO10
MDO11
MDO12
MDO13
MDO14
MDO15
ENDTA
IREAD
RDLY
RP/W
INT
IRMRQ
IMCL
ISMRQ
RQ
MRQ
IMSEL
ME
BUSY
READ
SMRQ
RMRQ
MCL
74174
74123
74150
74138
74139
74175
74126
74125
74136
74138
74139
74175
74126
74125
74136
74138
74139
74175
74126
74125
74136

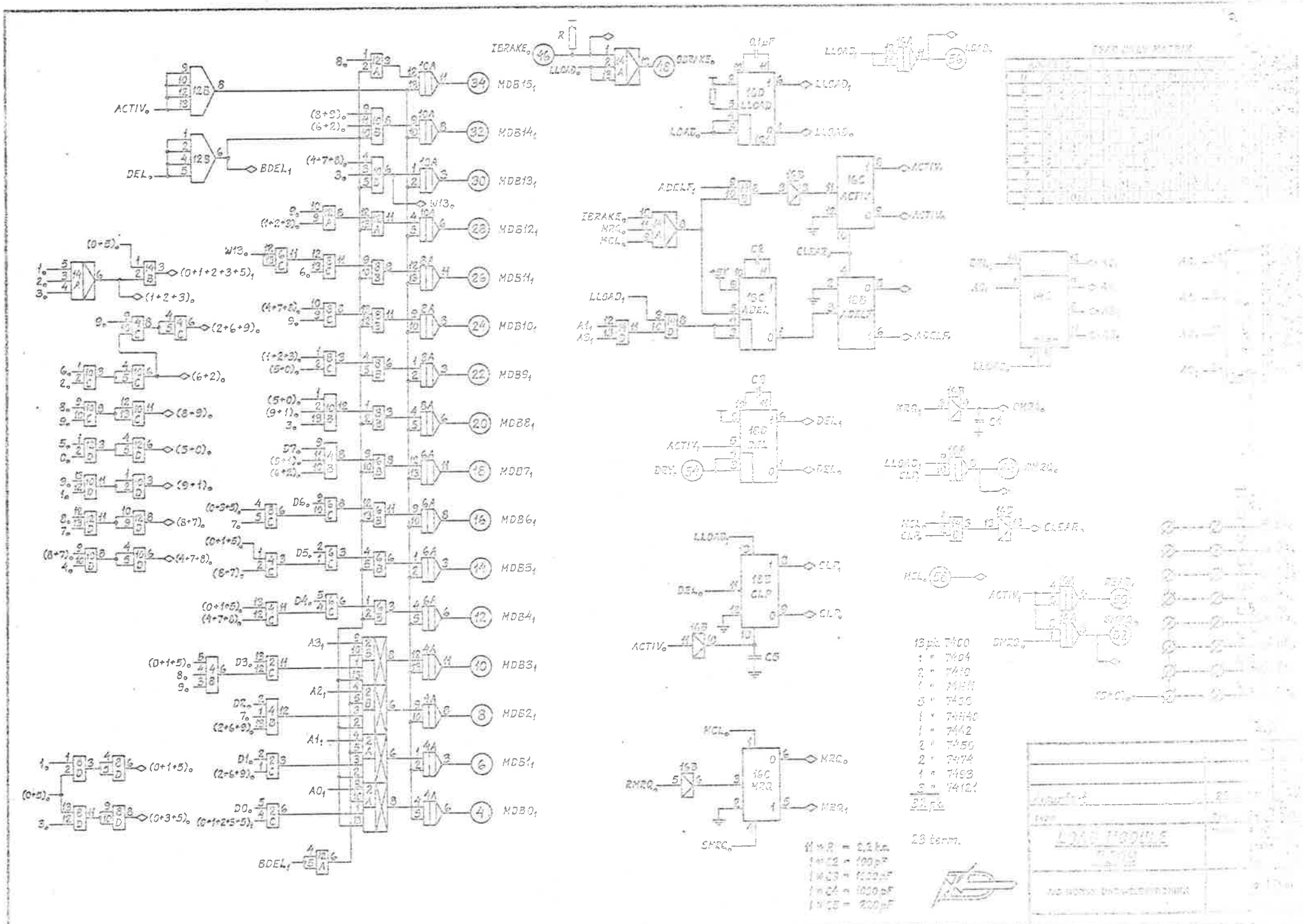
ACTIV
DEL
BDEL
IBRAKE
LLOAD
LOAD
OBRAKE
ADELF
ADELR
CLEAR
MRQ
MCL
RMRQ
SMRQ
CLP
MDB15
MDB14
MDB13
MDB12
MDB11
MDB10
MDB9
MDB8
MDB7
MDB6
MDB5
MDB4
MDB3
MDB2
MDB1
MDB0
13 pk. 7400
1 " 7404
3 " 7410
1 " 7420
3 " 7430
1 " 74H40
1 " 7442
2 " 7450
2 " 7474
1 " 7493
3 " 74121
31 pk.
28 term.
R = 0,1 kΩ
C2 = 100 pF
C3 = 1000 pF
C4 = 1000 pF
C5 = 1000 pF
LOAD MODULE
AD WORK ELECTRONICA

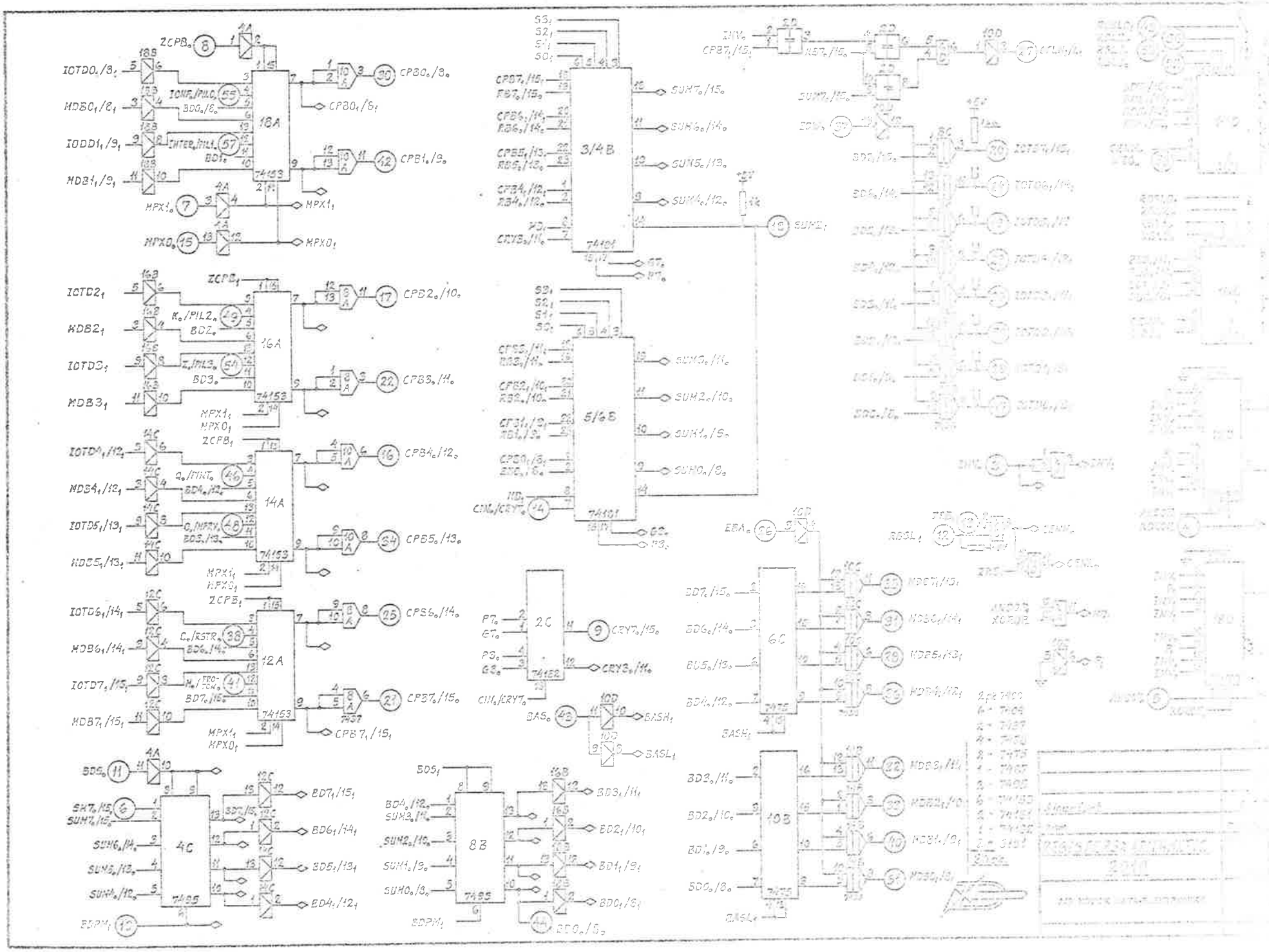
18A
16A
14A
12A
4C
8B
3/4B
5/6B
2C
6C
10B
74153
74163
74101
74166
74175
74157
74155
74165
74195
74182
74LS
74S
74H
74C
74F
74LS
74S
74H
74C
74F
74LS
74S
74H
74C
74F

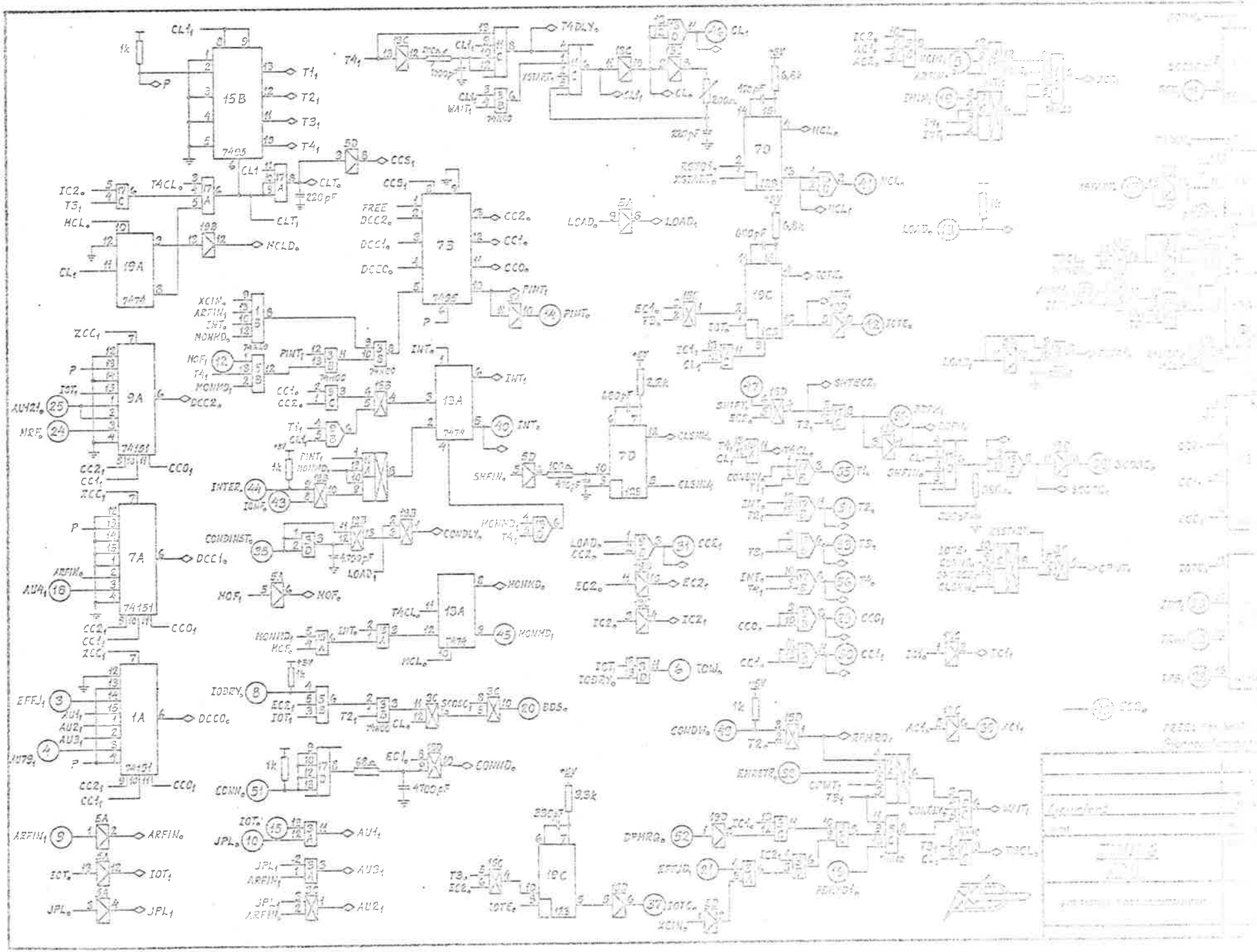
15B
7405
19A
7474
9A
74151
7A
74151
1A
74151
7B
7405
13A
7474
19C
7D
19D
19B
19C
19A
7A
19B
19C
19A
19C
19D
19C
19D
19C
19D

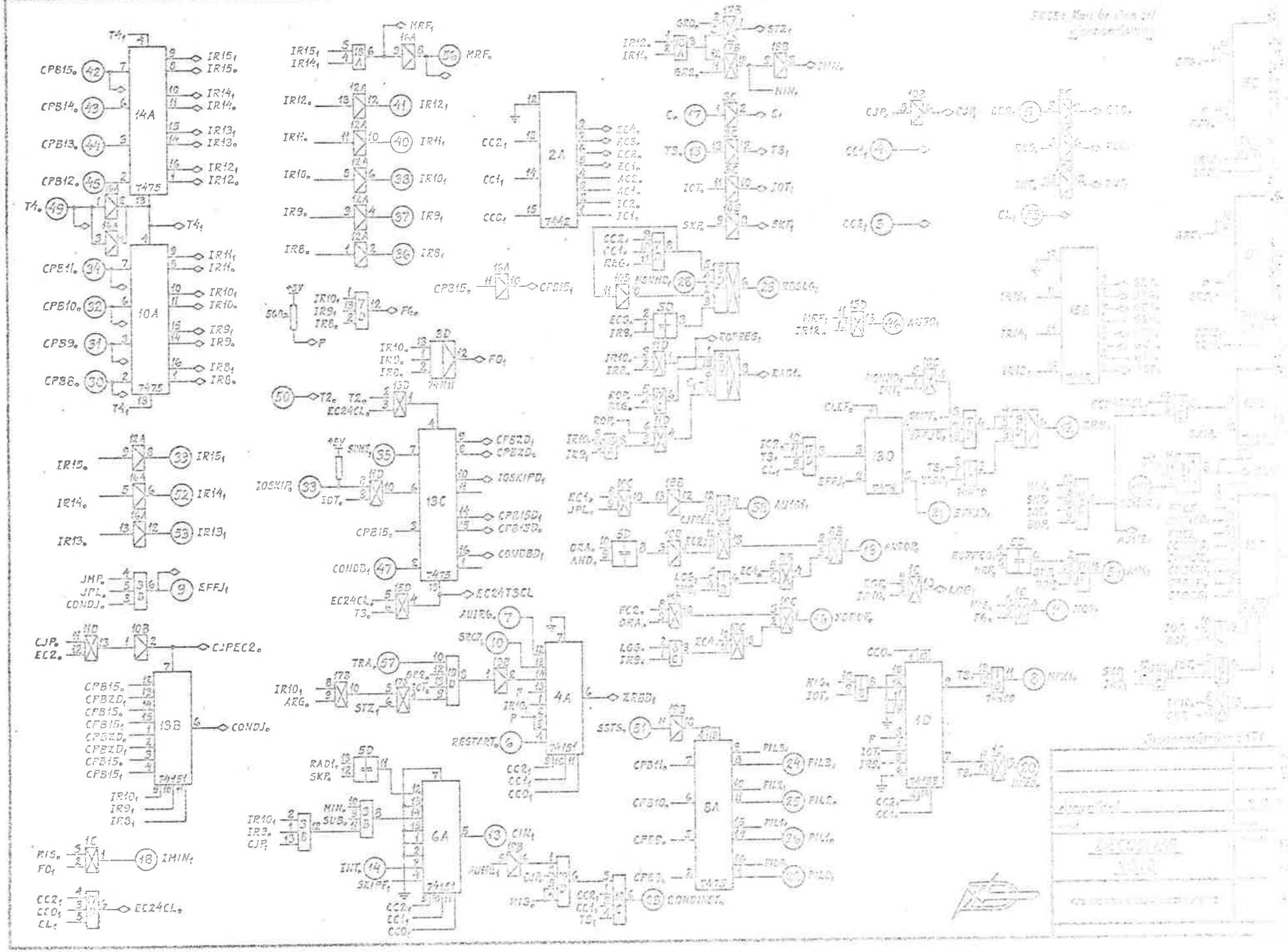
14A
7475
10A
7475
2A
7442
16A
12A
5D
3D
7411
15D
13C
7475
10D
13B
74151
4A
74151
6A
74151
8A
7475
1C
10B
17B
1D
74152
13D
7475
16B
15B
10C
5C
10E
5E
16E
7475
CPB15
CPB14
CPB13
CPB12
CPB11
CPB10
CPB9
CPB8
T4
IR15
IR14
IR13
IR12
IR11
IR10
IR9
IR8
MRF
CC2
CC1
CCO
CL
CJP
EC2
CJPEC2
CONDJ
IMIN
EC24CL
T2
FO
IOSKIP
IDT
CONDBD
EC24T3CL
AU126
SRC
TRA
STZ
ARG
ZREQ
REGSTART
RAD
SKP
MIN
SUB
INT
SKIPE
CIN
SSTS
FILB
CONDINEF
EFFJ
JMP
JPL
AU106
AU126
AU0R
LOG
XORE
MOV
HTX
MIS
FO
IMIN
EC24CL
CJP
CJPEC2
CONDJ
CONDINEF
CONDBD
EFFJ
AUTO
ROTREG
RAD
ROTLG
MOVHD
CLEF
EFHUD
ARG
ZREQ
HTX
IMIN
CIN
FILB
FILC
FILD
FILE
FILF
FILG
FILH
FILI
FILJ
FILK
FILL
FILM
FILN
FILO
FILP
FILQ
FILR
FILS
FILT
FILU
FILV
FILW
FILX
FILY
FILZ

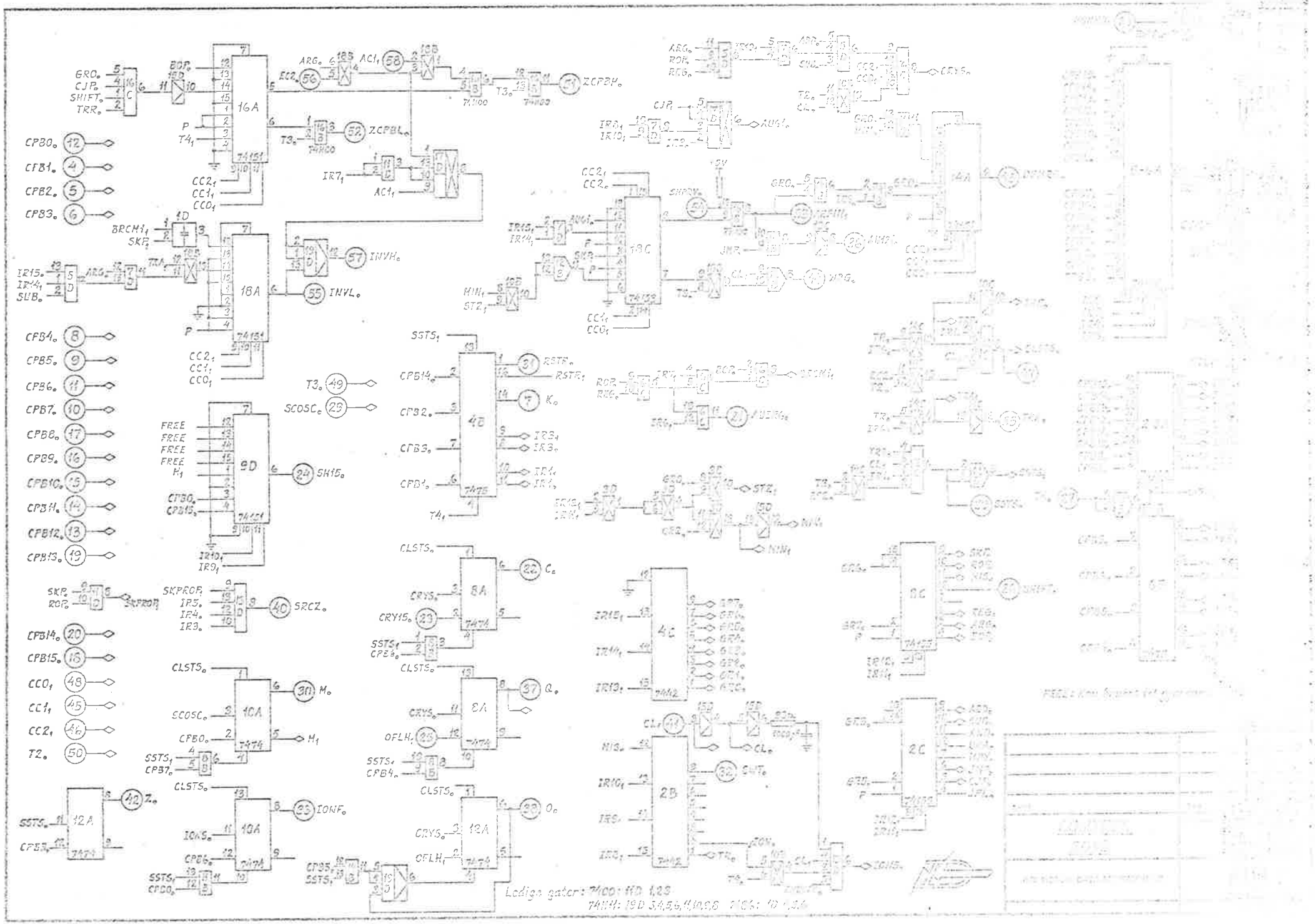
16A
74151
18A
74151
9D
74151
4B
74175
8A
74174
10A
74174
12A
74174
4C
74142
2B
74142
8C
74153
2C
74138
Ledige gater: 7400: HD 1,2,3
74H4: 19D 5,4,5,6,10,9,8 7404: 10 1,3,4

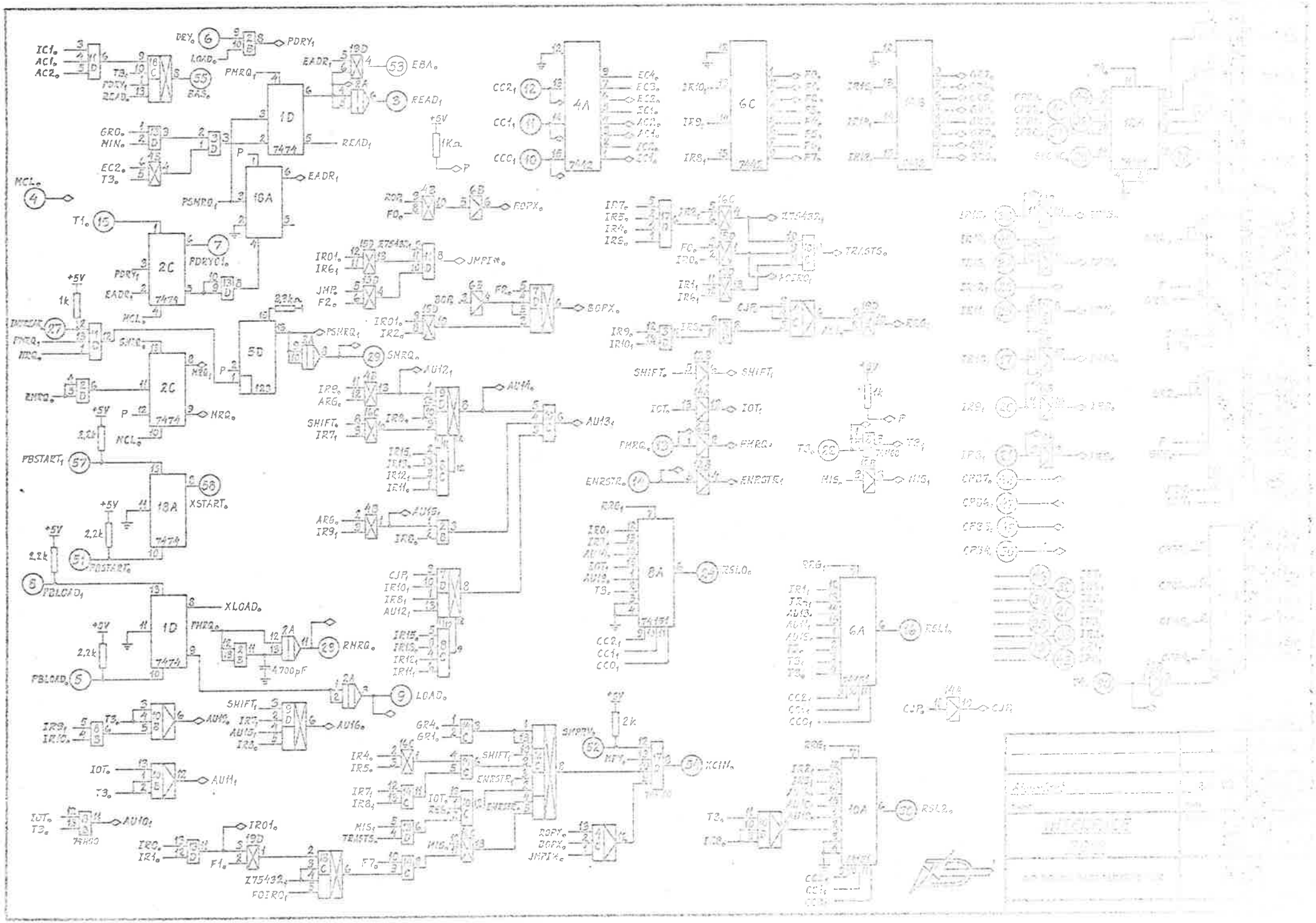

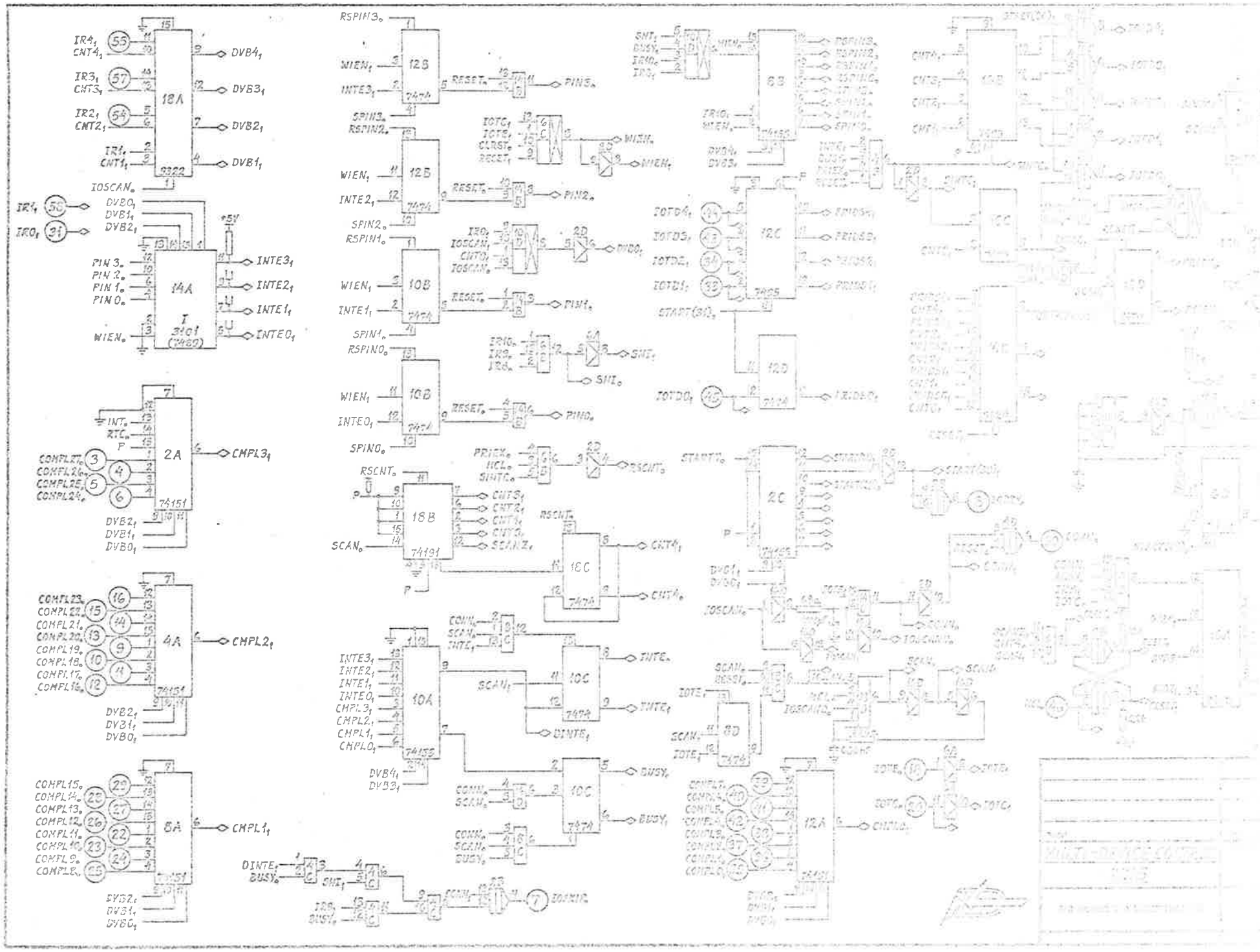
18A
9322
14A
2A
74151
4A
6A
12B
10B
18B
74191
10A
74155
10C
12C
12D
2C
8D
12A
6B
74155
10D
4C
10E
10F
10G
10H
10I
10J
10K
10L
10M
10N
10O
10P
10Q
10R
10S
10T
10U
10V
10W
10X
10Y
10Z
10AA
10AB
10AC
10AD
10AE
10AF
10AG
10AH
10AI
10AJ
10AK
10AL
10AM
10AN
10AO
10AP
10AQ
10AR
10AS
10AT
10AU
10AV
10AW
10AX
10AY
10AZ
10BA
10BB
10BC
10BD
10BE
10BF
10BG
10BH
10BI
10BJ
10BK
10BL
10BM
10BN
10BO
10BP
10BQ
10BR
10BS
10BT
10BU
10BV
10BW
10BX
10BY
10BZ
10CA
10CB
10CC
10CD
10CE
10CF
10CG
10CH
10CI
10CJ
10CK
10CL
10CM
10CN
10CO
10CP
10CQ
10CR
10CS
10CT
10CU
10CV
10CW
10CX
10CY
10CZ
10DA
10DB
10DC
10DD
10DE
10DF
10DG
10DH
10DI
10DJ
10DK
10DL
10DM
10DN
10DO
10DP
10DQ
10DR
10DS
10DT
10DU
10DV
10DW
10DX
10DY
10DZ
10EA
10EB
10EC
10ED
10EE
10EF
10EG
10EH
10EI
10EJ
10EK
10EL
10EM
10EN
10EO
10EP
10EQ
10ER
10ES
10ET
10EU
10EV
10EW
10EX
10EY
10EZ
10FA
10FB
10FC
10FD
10FE
10FF
10FG
10FH
10FI
10FJ
10FK
10FL
10FM
10FN
10FO
10FP
10FQ
10FR
10FS
10FT
10FU
10FV
10FW
10FX
10FY
10FZ
10GA
10GB
10GC
10GD
10GE
10GF
10GG
10GH
10GI
10GJ
10GK
10GL
10GM
10GN
10GO
10GP
10GQ
10GR
10GS
10GT
10GU
10GV
10GW
10GX
10GY
10GZ
10HA
10HB
10HC
10HD
10HE
10HF
10HG
10HH
10HI
10HJ
10HK
10HL
10HM
10HN
10HO
10HP
10HQ
10HR
10HS
10HT
10HU
10HV
10HW
10HX
10HY
10HZ
10IA
10IB
10IC
10ID
10IE
10IF
10IG
10IH
10II
10IJ
10IK
10IL
10IM
10IN
10IO
10IP
10IQ
10IR
10IS
10IT
10IU
10IV
10IW
10IX
10IY
10IZ
10JA
10JB
10JC
10JD
10JE
10JF
10JG
10JH
10JI
10JJ
10JK
10JL
10JM
10JN
10JO
10JP
10JQ
10JR
10JS
10JT
10JU
10JV
10JW
10JX
10JY
10JZ
10KA
10KB
10KC
10KD
10KE
10KF
10KG
10KH
10KI
10KJ
10KK
10KL
10KM
10KN
10KO
10KP
10KQ
10KR
10KS
10KT
10KU
10KV
10KW
10KX
10KY
10KZ
10LA
10LB
10LC
10LD
10LE
10LF
10LG
10LH
10LI
10LJ
10LK
10LL
10LM
10LN
10LO
10LP
10LQ
10LR
10LS
10LT
10LU
10LV
10LW
10LX
10LY
10LZ
10MA
10MB
10MC
10MD
10ME
10MF
10MG
10MH
10MI
10MJ
10MK
10ML
10MM
10MN
10MO
10MP
10MQ
10MR
10MS
10MT
10MU
10MV
10MW
10MX
10MY
10MZ
10NA
10NB
10NC
10ND
10NE
10NF
10NG
10NH
10NI
10NJ
10NK
10NL
10NM
10NN
10NO
10NP
10NQ
10NR
10NS
10NT
10NU
10NV
10NW
10NX
10NY
10NZ
10OA
10OB
10OC
10OD
10OE
10OF
10OG
10OH
10OI
10OJ
10OK
10OL
10OM
10ON
10OO
10OP
10OQ
10OR
10OS
10OT
10OU
10OV
10OW
10OX
10OY
10OZ
10PA
10PB
10PC
10PD
10PE
10PF
10PG
10PH
10PI
10PJ
10PK
10PL
10PM
10PN
10PO
10PP
10PQ
10PR
10PS
10PT
10PU
10PV
10PW
10PX
10PY
10PZ
10QA
10QB
10QC
10QD
10QE
10QF
10QG
10QH
10QI
10QJ
10QK
10QL
10QM
10QN
10QO
10QP
10QQ
10QR
10QS
10QT
10QU
10QV
10QW
10QX
10QY
10QZ
10RA
10RB
10RC
10RD
10RE
10RF
10RG
10RH
10RI
10RJ
10RK
10RL
10RM
10RN
10RO
10RP
10RQ
10RR
10RS
10RT
10RU
10RV
10RW
10RX
10RY
10RZ
10SA
10SB
10SC
10SD
10SE
10SF
10SG
10SH
10SI
10SJ
10SK
10SL
10SM
10SN
10SO
10SP
10SQ
10SR
10SS
10ST
10SU
10SV
10SW
10SX
10SY
10SZ
10TA
10TB
10TC
10TD
10TE
10TF
10TG
10TH
10TI
10TJ
10TK
10TL
10TM
10TN
10TO
10TP
10TQ
10TR
10TS
10TT
10TU
10TV
10TW
10TX
10TY
10TZ
10UA
10UB
10UC
10UD
10UE
10UF
10UG
10UH
10UI
10UJ
10UK
10UL
10UM
10UN
10UO
10UP
10UQ
10UR
10US
10UT
10UU
10UV
10UW
10UX
10UY
10UZ
10VA
10VB
10VC
10VD
10VE
10VF
10VG
10VH
10VI
10VJ
10VK
10VL
10VM
10VN
10VO
10VP
10VQ
10VR
10VS
10VT
10VU
10VV
10VW
10VX
10VY
10VZ
10WA
10WB
10WC
10WD
10WE
10WF
10WG
10WH
10WI
10WJ
10WK
10WL
10WM
10WN
10WO
10WP
10WQ
10WR
10WS
10WT
10WU
10WV
10WW
10WX
10WY
10WZ
10XA
10XB
10XC
10XD
10XE
10XF
10XG
10XH
10XI
10XJ
10XK
10XL
10XM
10XN
10XO
10XP
10XQ
10XR
10XS
10XT
10XU
10XV
10XW
10XX
10XY
10XZ
10YA
10YB
10YC
10YD
10YE
10YF
10YG
10YH
10YI
10YJ
10YK
10YL
10YM
10YN
10YO
10YP
10YQ
10YR
10YS
10YT
10YU
10YV
10YW
10YX
10YY
10YZ
10ZA
10ZB
10ZC
10ZD
10ZE
10ZF
10ZG
10ZH
10ZI
10ZJ
10ZK
10ZL
10ZM
10ZN
10ZO
10ZP
10ZQ
10ZR
10ZS
10ZT
10ZU
10ZV
10ZW
10ZX
10ZY
10ZZ

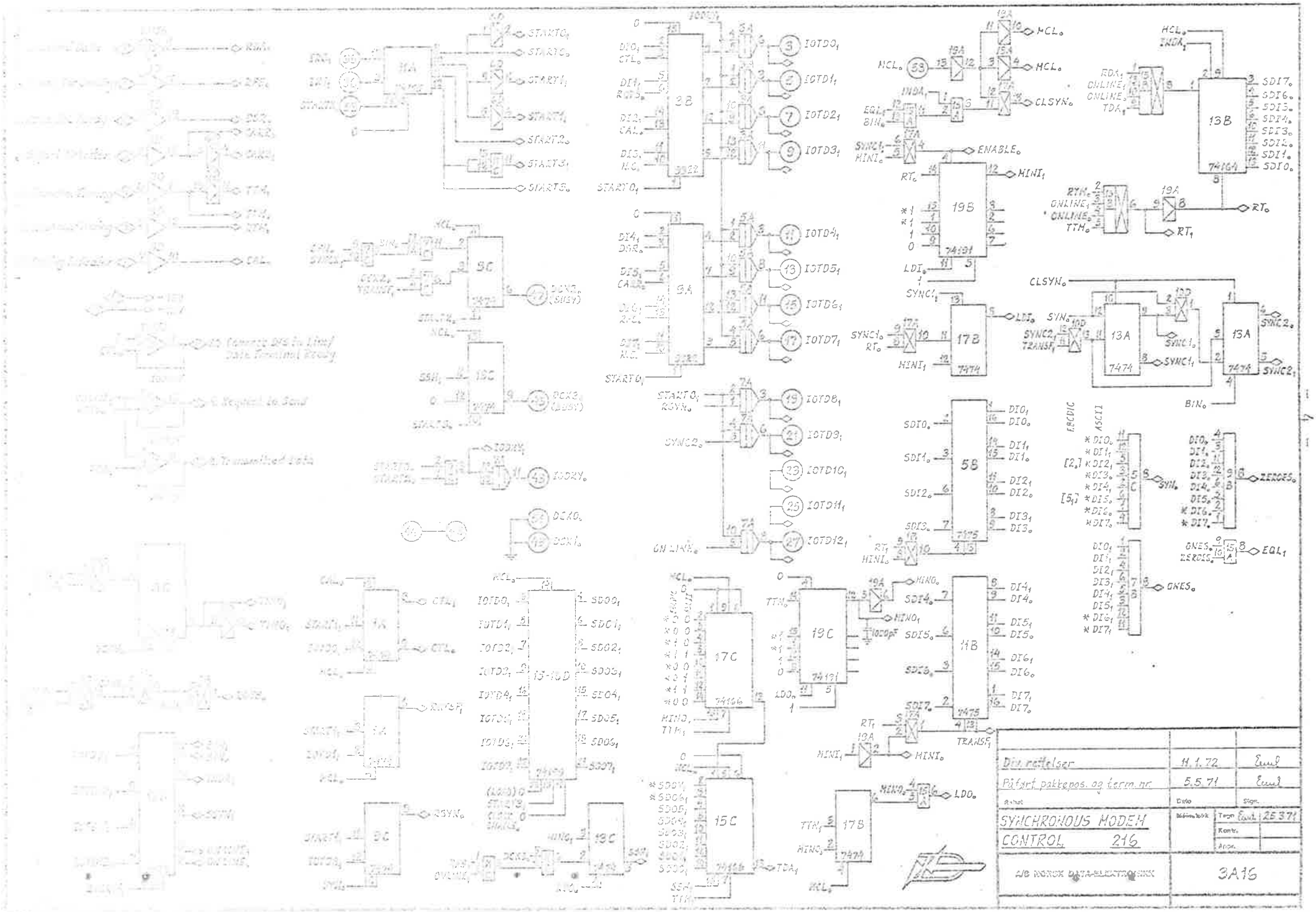
SYNCHRONOUS MODEM
CONTROL 216
Div. rettelser 11.1.72
Påført pakkepos. og term. nr 5.5.71
A/S NORCK DATA-ELEKTRONIKK
3A16

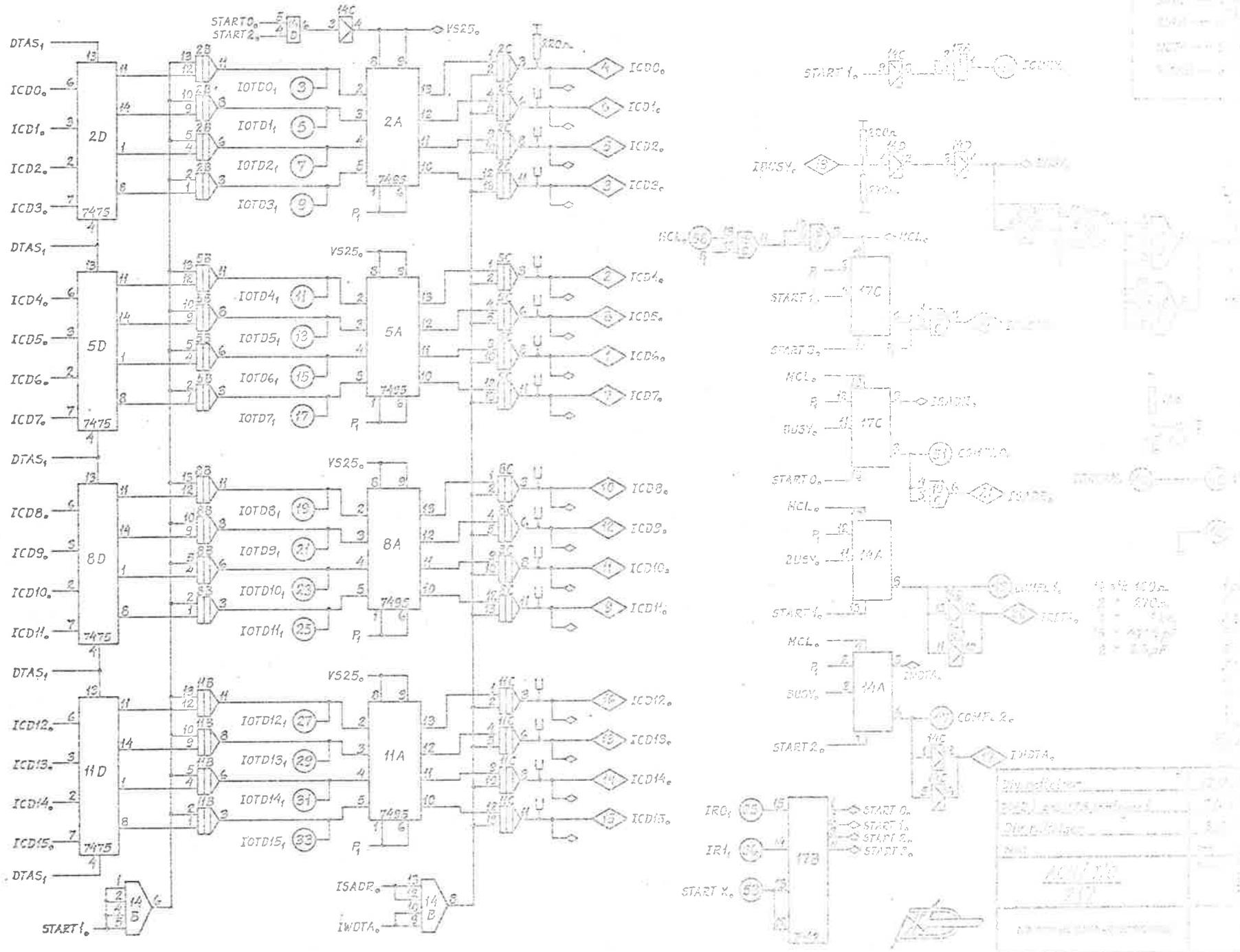
DTAS1
ICD0o
ICD1o
ICD2o
ICD3o
2D
7475
ICD4o
ICD5o
ICD6o
ICD7o
5D
ICD8o
ICD9o
ICD10o
ICD11o
8D
ICD12o
ICD13o
ICD14o
ICD15o
11D
START0o
START2o
VS25o
IOTD0 1
IOTD1 1
IOTD2 1
IOTD3 1
2A
IOTD4 1
IOTD5 1
IOTD6 1
IOTD7 1
5A
IOTD8 1
IOTD9 1
IOTD10 1
IOTD11 1
8A
IOTD12 1
IOTD13 1
IOTD14 1
IOTD15 1
11A
7485
P1
START1o
ISADRo
IWDTAo
START1o
IBUSYo
MCLo
17C
ISADR1
BUSYo
COMPL1o
14A
COMPL1o
IWDTAo
COMPL2o
IWDTAo
IR0 1
IR1 1
START Xo
17B
START 0o
START 1o
START 2o
START 3o

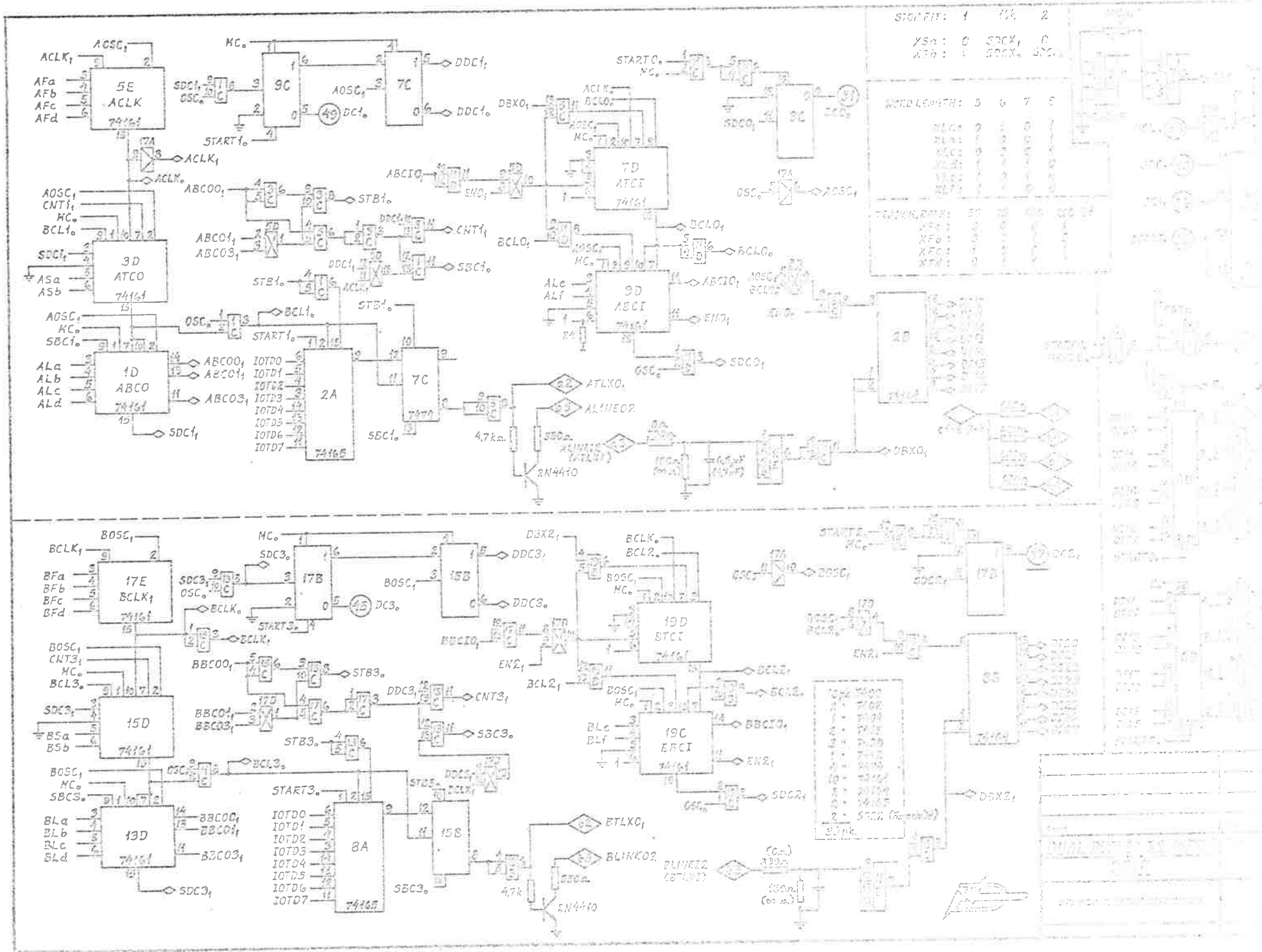
5E ACLK 74161
9C
7C
3D ATCO 74161
1D ABCO 74161
2A 74165
7D ATCI 74161
9D ABCI 74161
2B
17E BCLK1 74161
17B
15B
19D BTCI 74161
19C BBCI 74161
15D 74161
13D 74161
8A 74165
15B
8S 74161
2N4410
2N4410
4,7kΩ
4,7k
WORD LENGTH: 5 6 7 8
TRANSM. RATE:
XFC:
XFD:

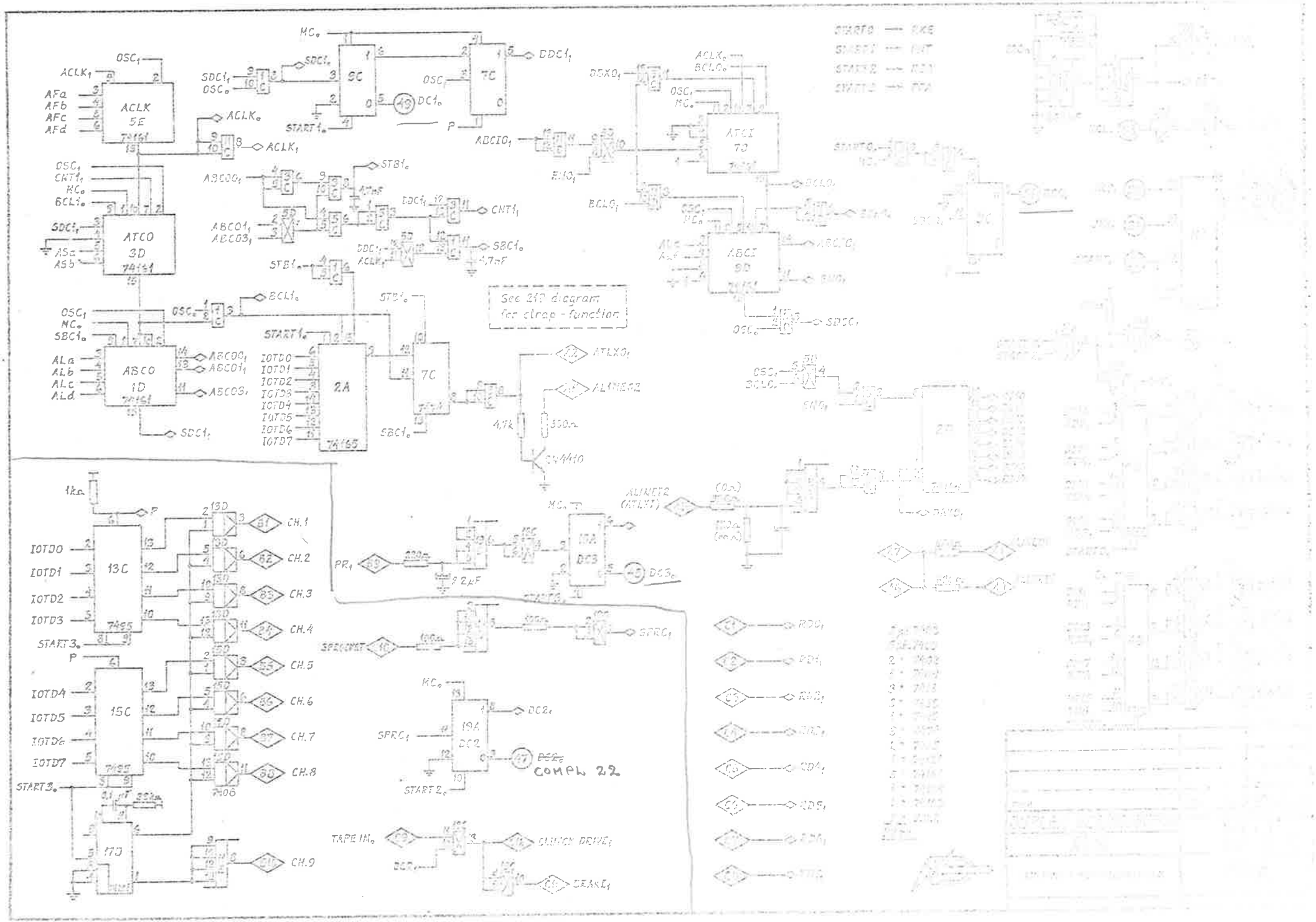
ACLK 5E 74161
ATCO 3D 74161
ABCO 1D 74161
2A 74165
9C
7C
ATCI 7D
ABCI 9D 74161
See 212 diagram for clrap - function
13C 74165
15C 74165
17D
17A DC3
19A DC2
COMPL 22
CH.1
CH.2
CH.3
CH.4
CH.5
CH.6
CH.7
CH.8
CH.9
CLUTCH DRIVE
BRAKE

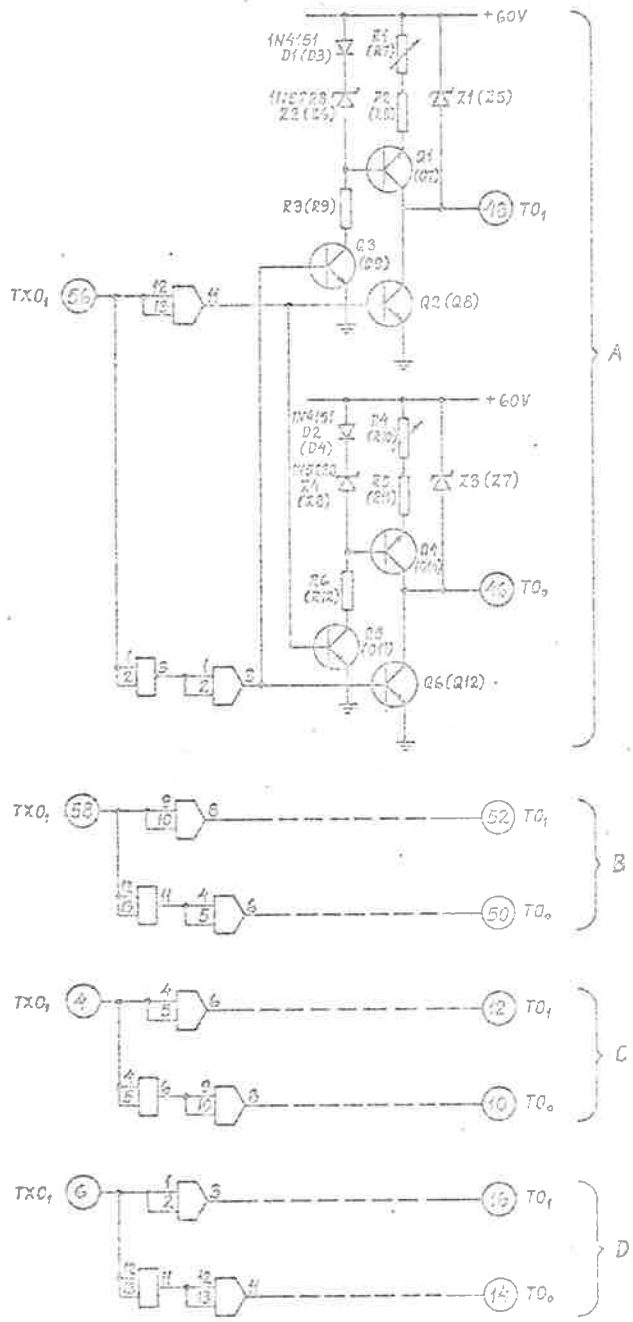
+60V
1N4151
D1(D3)
R1
(R7)
1N5228
Z2(Z6)
R2
(R8)
Z1(Z5)
Q1
(Q7)
R3(R9)
Q3
(Q9)
Q2(Q8)
TX0₁
TO₁
A
D2
(D4)
R4
(R10)
Z4
(Z8)
R5
(R11)
Z3(Z7)
Q4
(Q10)
R6
(R12)
Q5
(Q11)
Q6(Q12)
TO₀
TX0₁
TO₁
TO₀
B
TX0₁
TO₁
TO₀
C
TX0₁
TO₁
TO₀
D

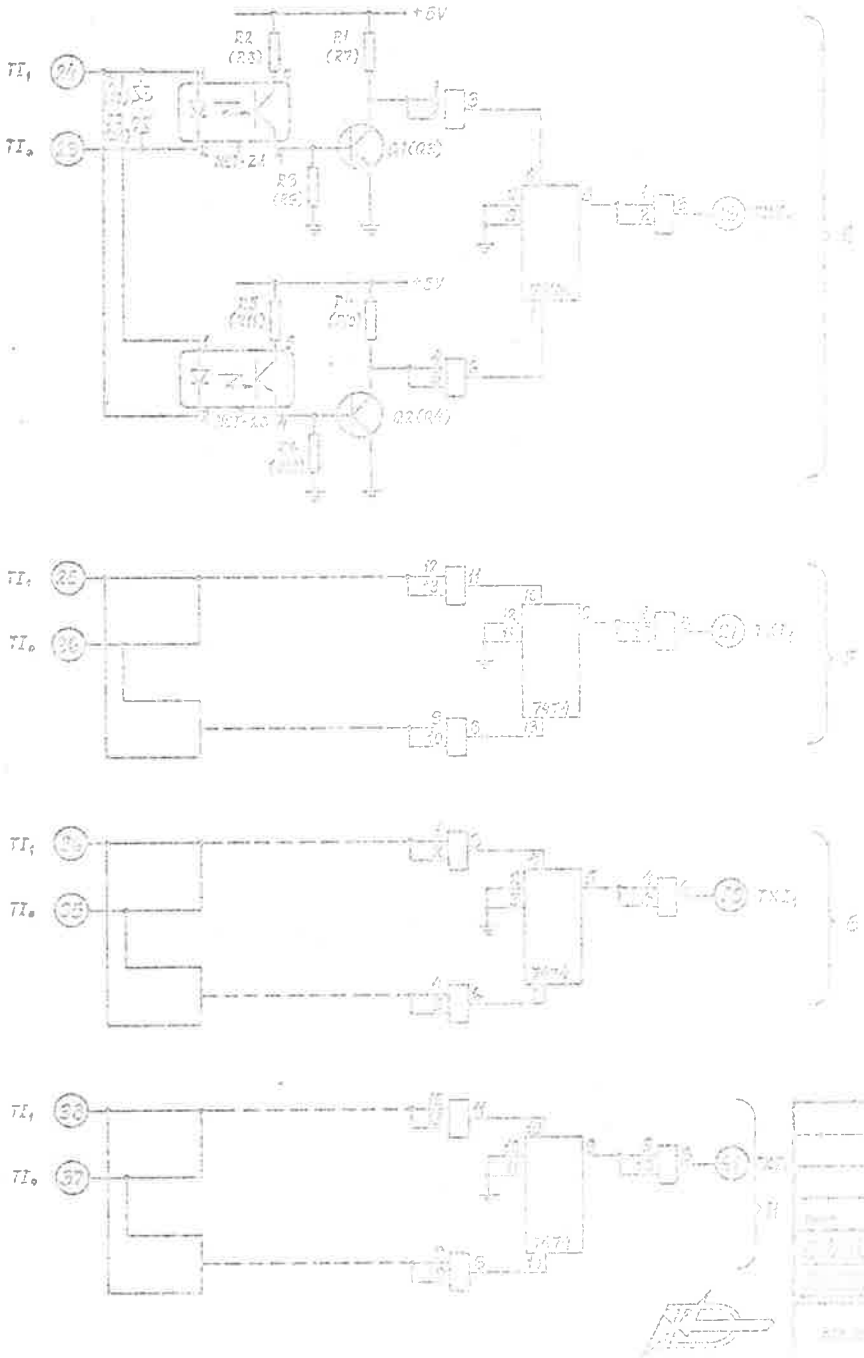
+5V
R2
(R3)
R1
(R7)
TI₁
TI₀
R3
(R8)
Q1(Q5)
R5
(R11)
R7
(R13)
Q3(Q4)
TI₁
TI₀
TX1₁
F
TI₁
TI₀
TX1₁
G
TI₁
TI₀
H

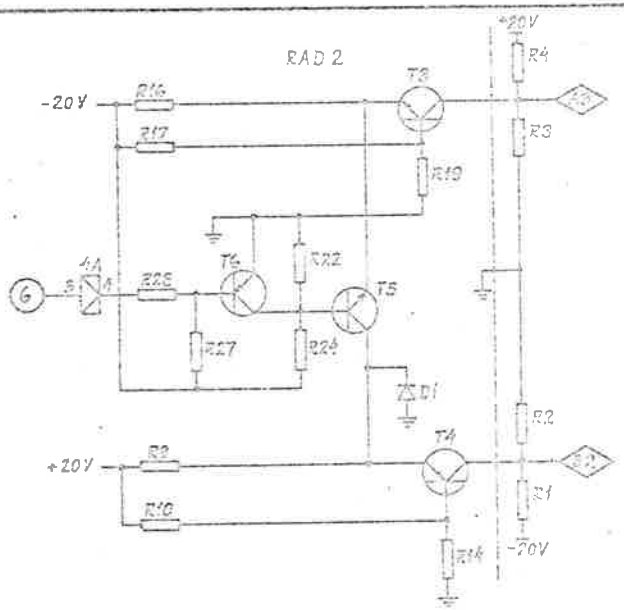

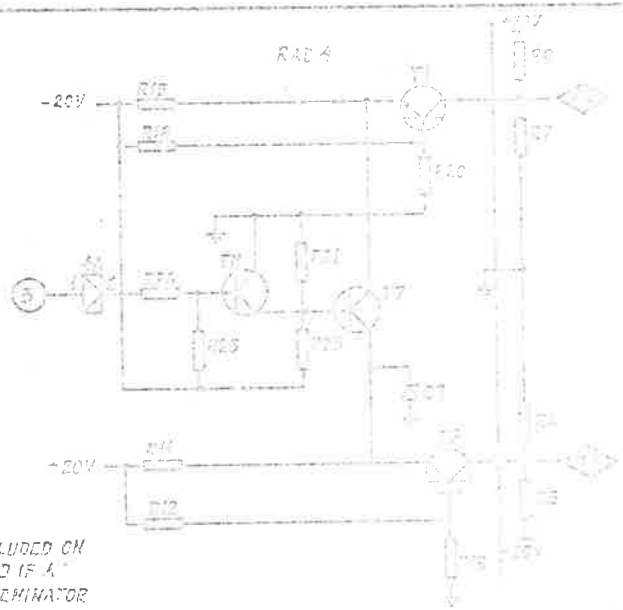

NOTE:
R1 - R8 IS NOT INCLUDED ON THE CIRCUIT BOARD IF A STANDARD CDC TERMINATOR IS USED.

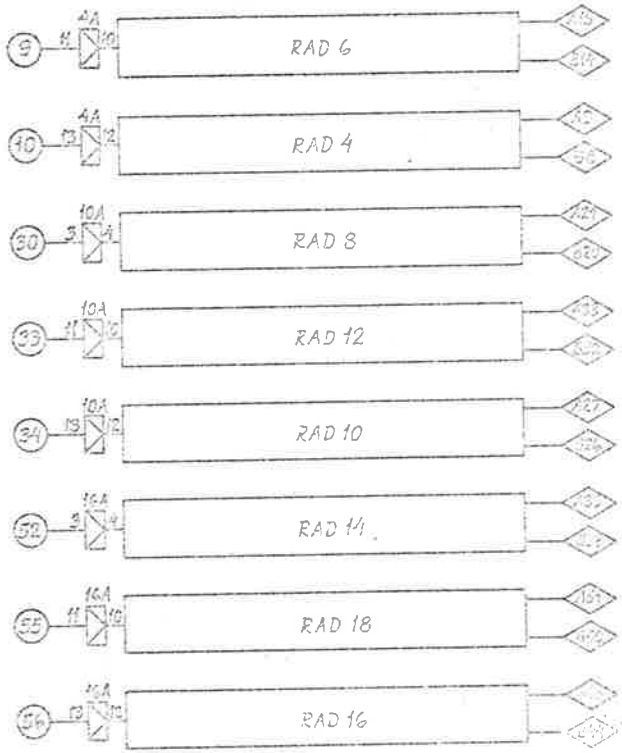

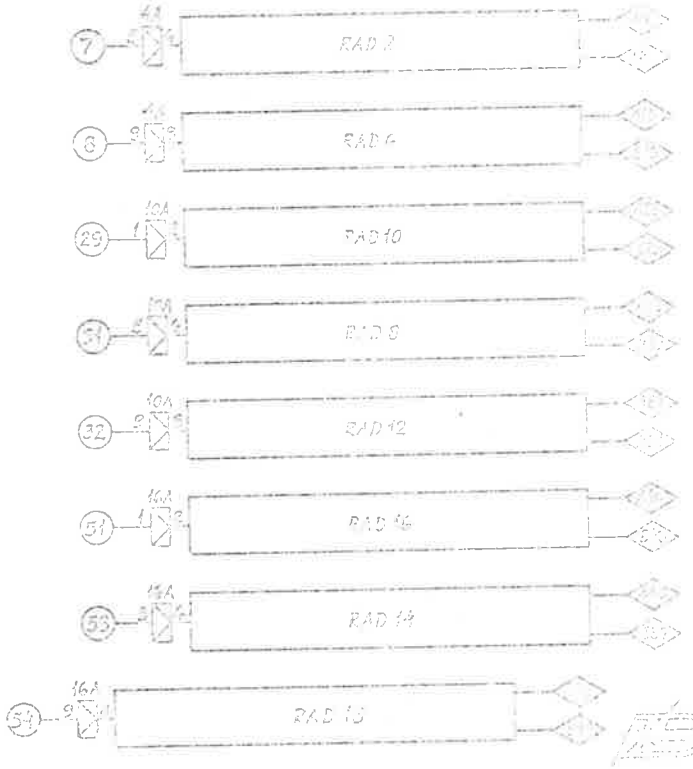

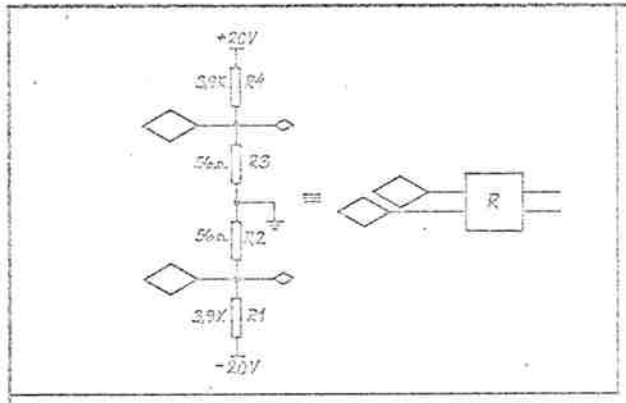
+20V
3,9K R4
56Ω R3
56Ω R2
3,9K R1
-20V
R

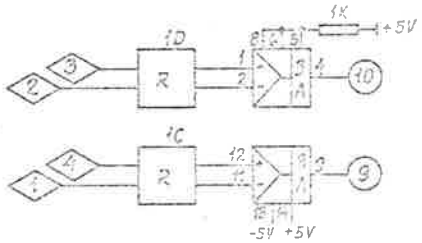
1D
1C
1K
+5V
-5V +5V

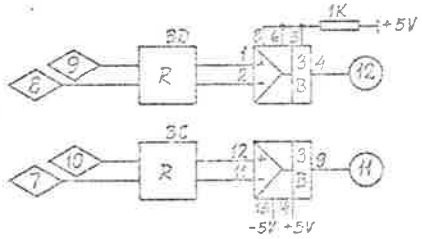
3D
3C
1K
+5V
-5V +5V

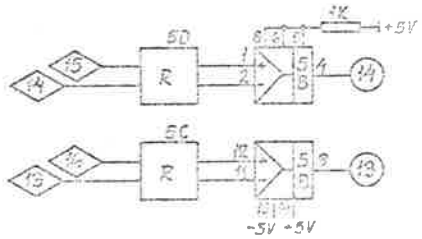
5D
5C
1K
+5V
-5V +5V

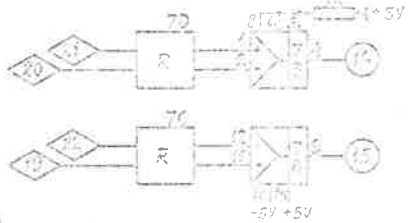
7D
7C
1K
+5V
-5V +5V

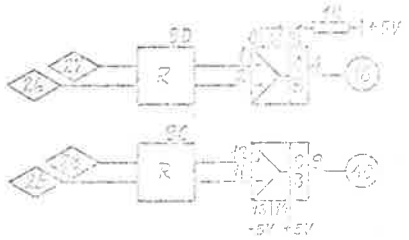
9D
9C
1K
+5V
-5V +5V

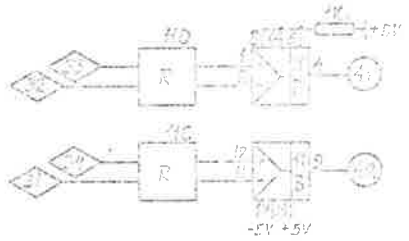
11D
11C
1K
+5V
-5V +5V

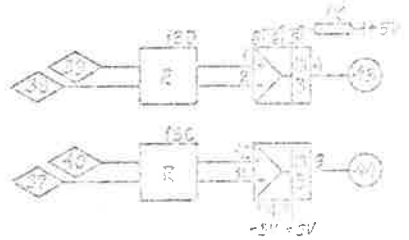
13D
13C
1K
+5V
-5V +5V

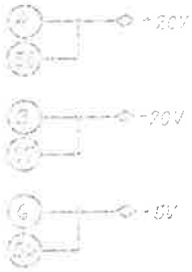
+20V
-20V
+5V

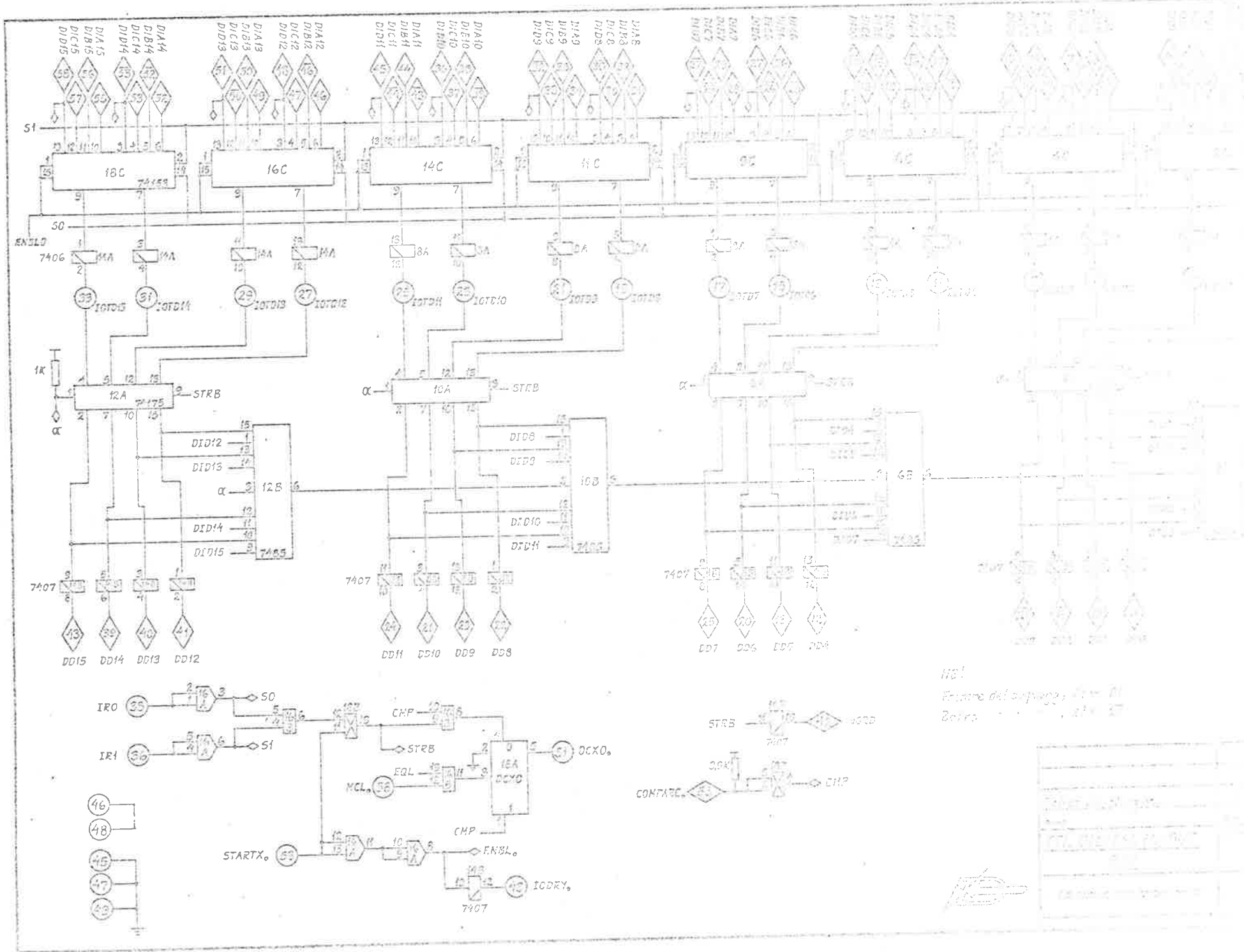
S1
S0
ENSLD
18C
74159
16C
14C
12A
74175
STRB
12B
74155
10A
10B
7406
7407
1K
DID15
DID14
DID13
DID12
DID11
DID10
DID9
DID8
DD15
DD14
DD13
DD12
DD11
DD10
DD9
DD8
DD7
DD6
DD5
DD4
IR0
IR1
CMP
EQL
MCL
DCXO
STARTX
ENSL
IODRY
COMPARE
20K

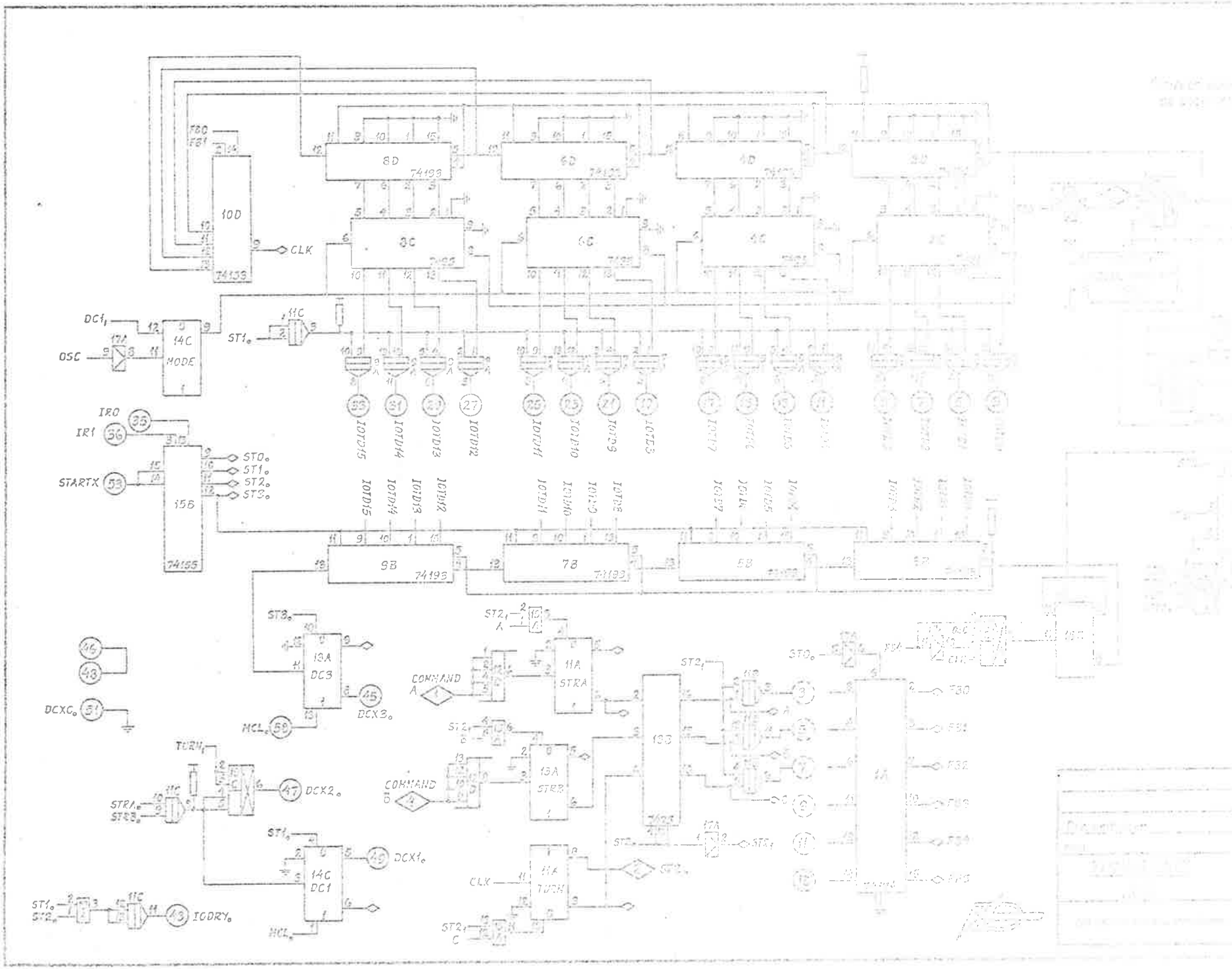
10D
74193
CLK
8D
74193
9D
74193
10D
74193
8C
74193
9C
74193
10C
74193
DC1
OSC
14C
MODE
ST1
IR0
IR1
STARTX
15B
74155
STO
ST1
ST2
ST3
9B
74193
7B
74193
8B
74193
9B
74193
13A
DC3
DCX3
MCL
DCXC
TURN
STRA
STRB
DCX2
14C
DC1
DCX1
IGDRY
COMMAND A
COMMAND B
11A
STRA
13A
STRB
13B
74125
11A
TURN
CLK
1A
74125
F30
F31
F32
F33
F34
F35

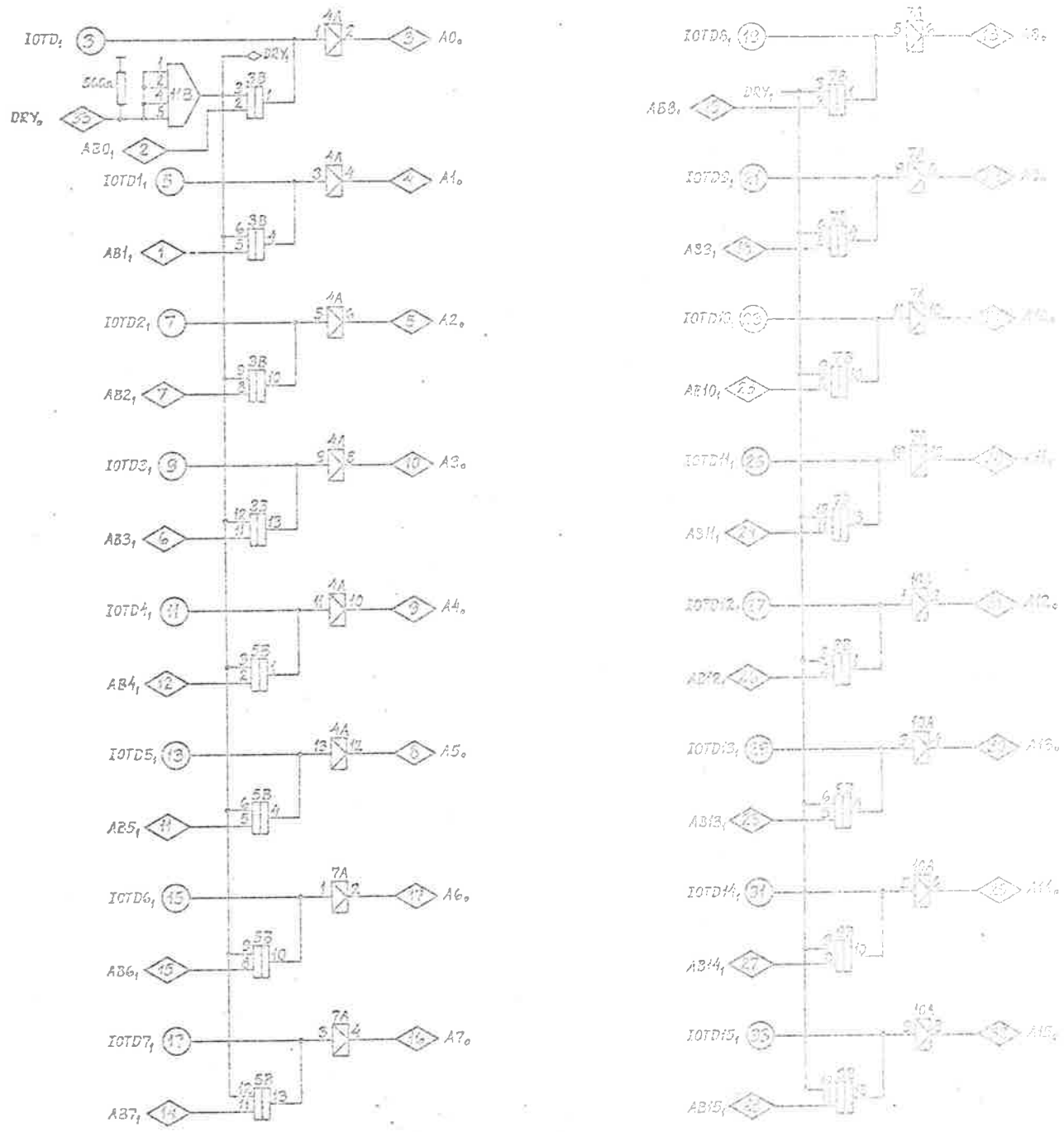
IOTD0 1
DRY0
AB0 1
IOTD1 1
AB1 1
IOTD2 1
AB2 1
IOTD3 1
AB3 1
IOTD4 1
AB4 1
IOTD5 1
AB5 1
IOTD6 1
AB6 1
IOTD7 1
AB7 1
A0
A1
A2
A3
A4
A5
A6
A7
IOTD8 1
AB8 1
IOTD9 1
AB9 1
IOTD10 1
AB10 1
IOTD11 1
AB11 1
IOTD12 1
AB12 1
IOTD13 1
AB13 1
IOTD14 1
AB14 1
IOTD15 1
AB15 1
A8
A9
A10
A11
A12
A13
A14
A15

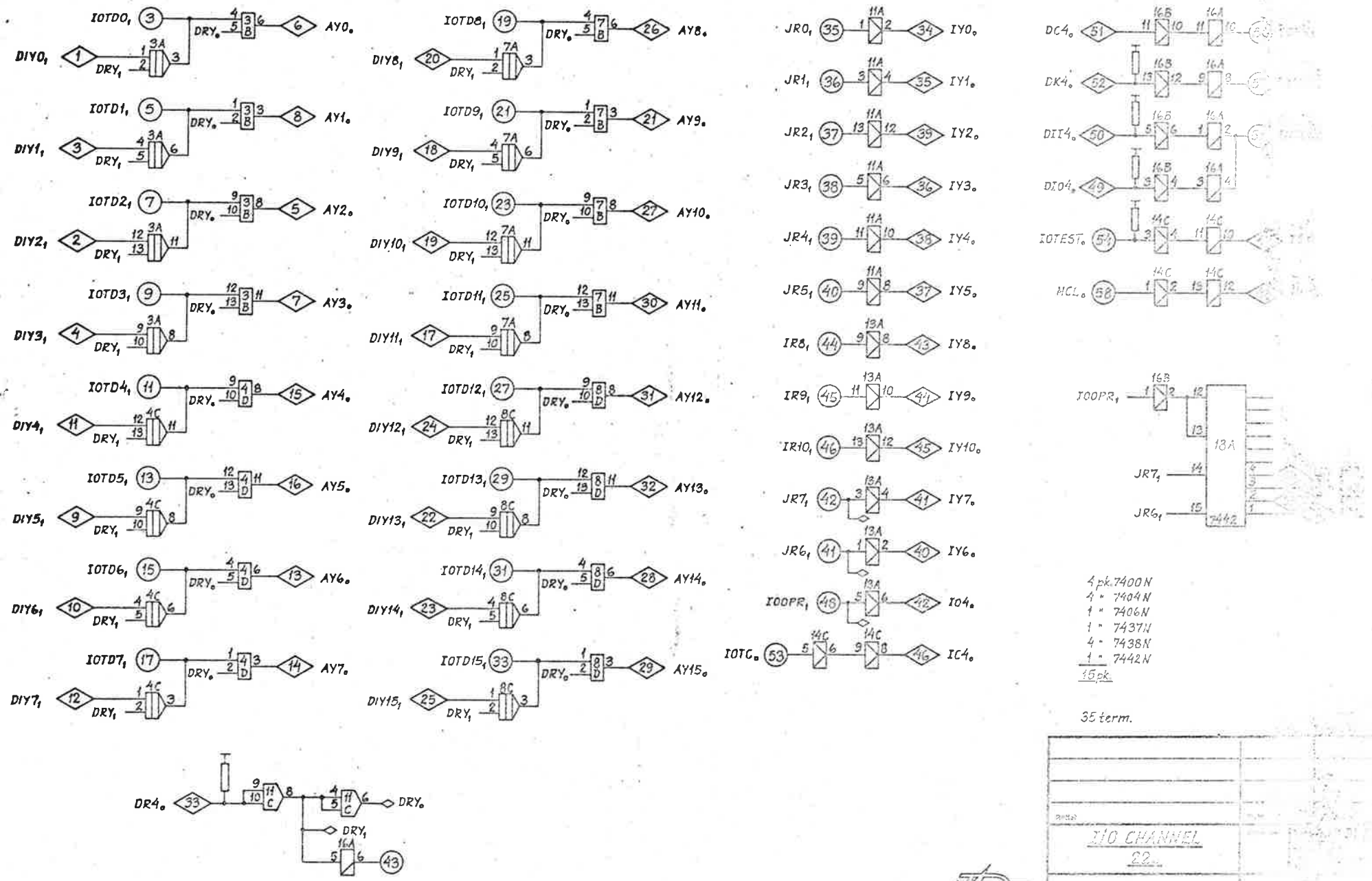
IOTD0, 3
DIY0, 1
DRY, 1
DRY0
AY0
IOTD1, 5
DIY1, 3
AY1
IOTD2, 7
DIY2, 2
AY2
IOTD3, 9
DIY3, 4
AY3
IOTD4, 11
DIY4, 11
AY4
IOTD5, 13
DIY5, 9
AY5
IOTD6, 15
DIY6, 10
AY6
IOTD7, 17
DIY7, 12
AY7
IOTD8, 19
DIY8, 20
AY8
IOTD9, 21
DIY9, 18
AY9
IOTD10, 23
DIY10, 19
AY10
IOTD11, 25
DIY11, 17
AY11
IOTD12, 27
DIY12, 24
AY12
IOTD13, 29
DIY13, 22
AY13
IOTD14, 31
DIY14, 23
AY14
IOTD15, 33
DIY15, 25
AY15
DR4 33
DRY0
DRY1
43
JR0, 35
IY0
JR1, 36
IY1
JR2, 37
IY2
JR3, 38
IY3
JR4, 39
IY4
JR5, 40
IY5
IR8, 44
IY8
IR9, 45
IY9
IR10, 46
IY10
JR7, 42
IY7
JR6, 41
IY6
IOOPR, 48
IO4
IOTC 53
IC4
DC4 51
DK4 52
DII4 50
DIO4 49
IOTEST 54
MCL 58
IOOPR, 1
JR7, 14
JR6, 15
7442
4 pk. 7400N
4 " 7404N
1 " 7406N
1 " 7437N
4 " 7438N
1 " 7442N
15 pk
35 term.
I/O CHANNEL
22
A/S NORSK DATA-ELEKTRONIKK

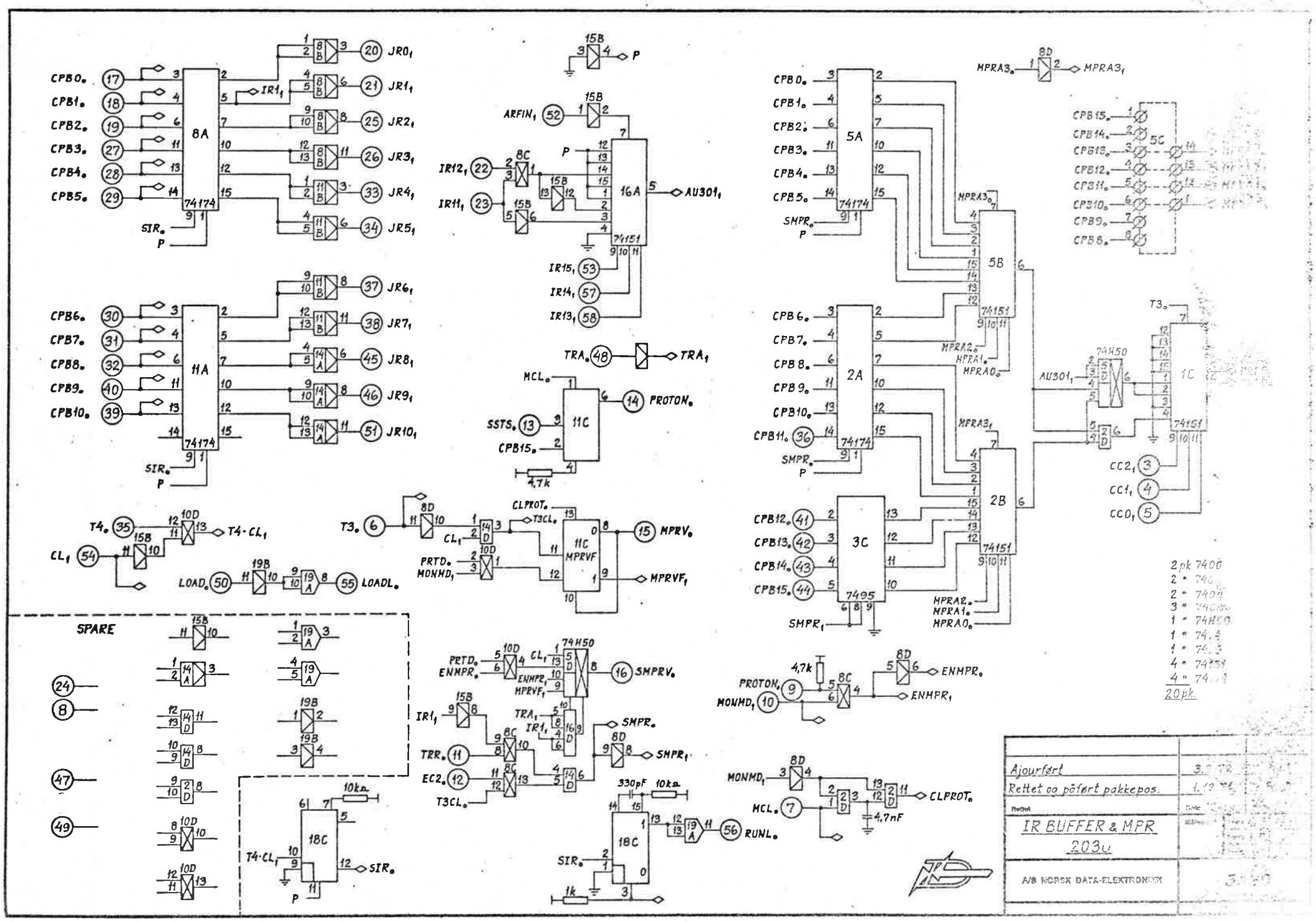
8A
74174
11A
74174
16A
74151
5A
74174
2A
74174
3C
7495
5B
74151
2B
74151
5C
1C
74151
74H50
11C
MPRV
11C
MPRVF
18C
18C
SPARE
IR BUFFER & MPR
203u
A/S NORSK DATA-ELEKTRONIKK
Ajourført
Rettet og påført pakkepos.
2pk 7400
20pk.

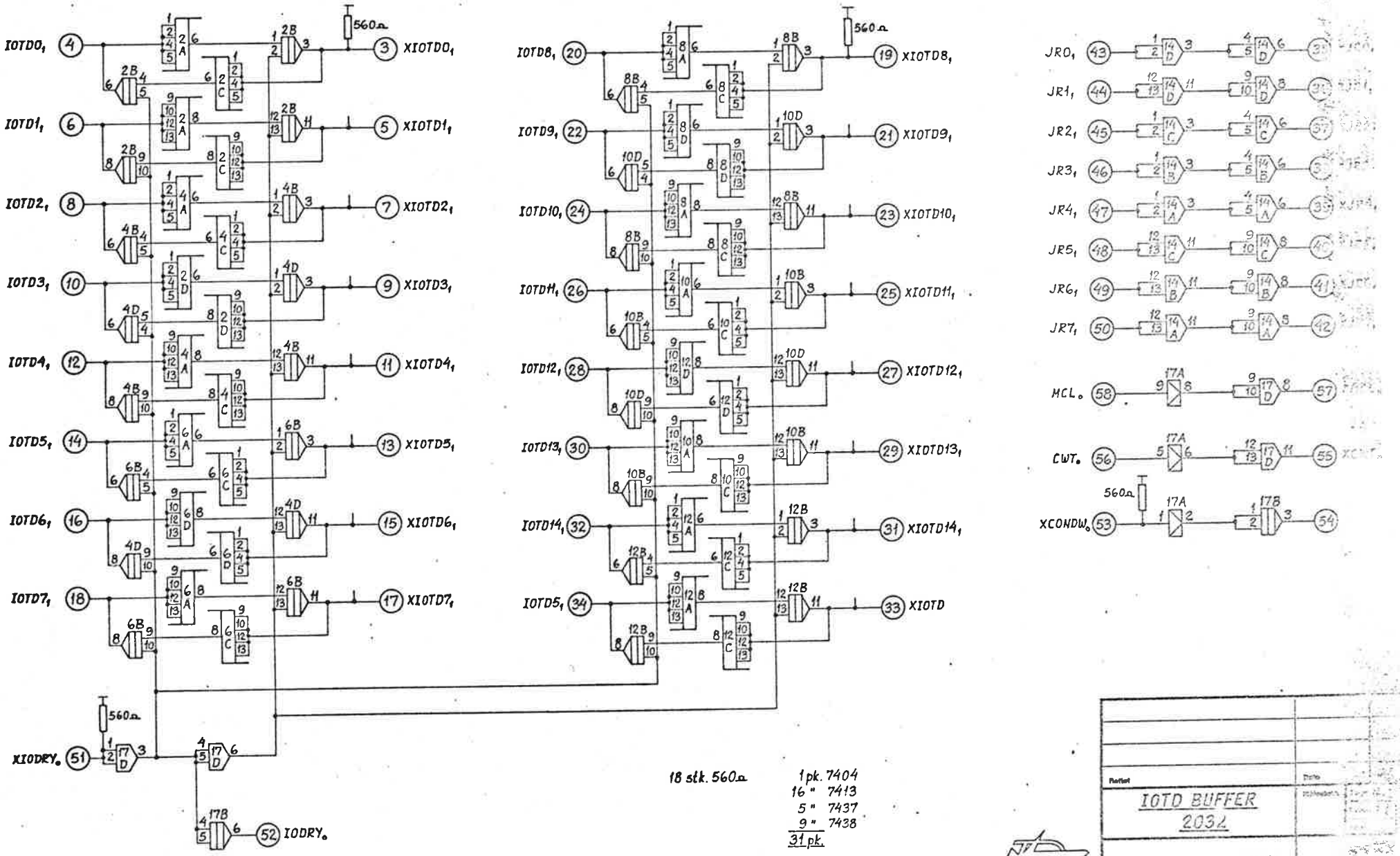

18 stk. 560Ω

1 pk. 7404
16 " 7413
5 " 7437
9 " 7438
31 pk.

56 term.

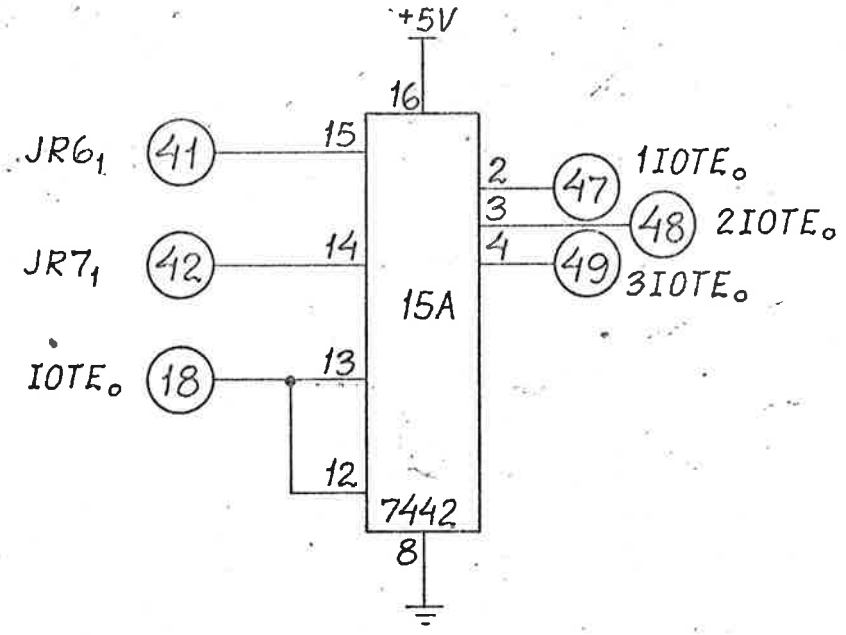

DRAWN BY Eeul	Remarks	Replacement for	Date
APPROVED BY, I.B.		Replaced by	Date
DATE 8.2.72			

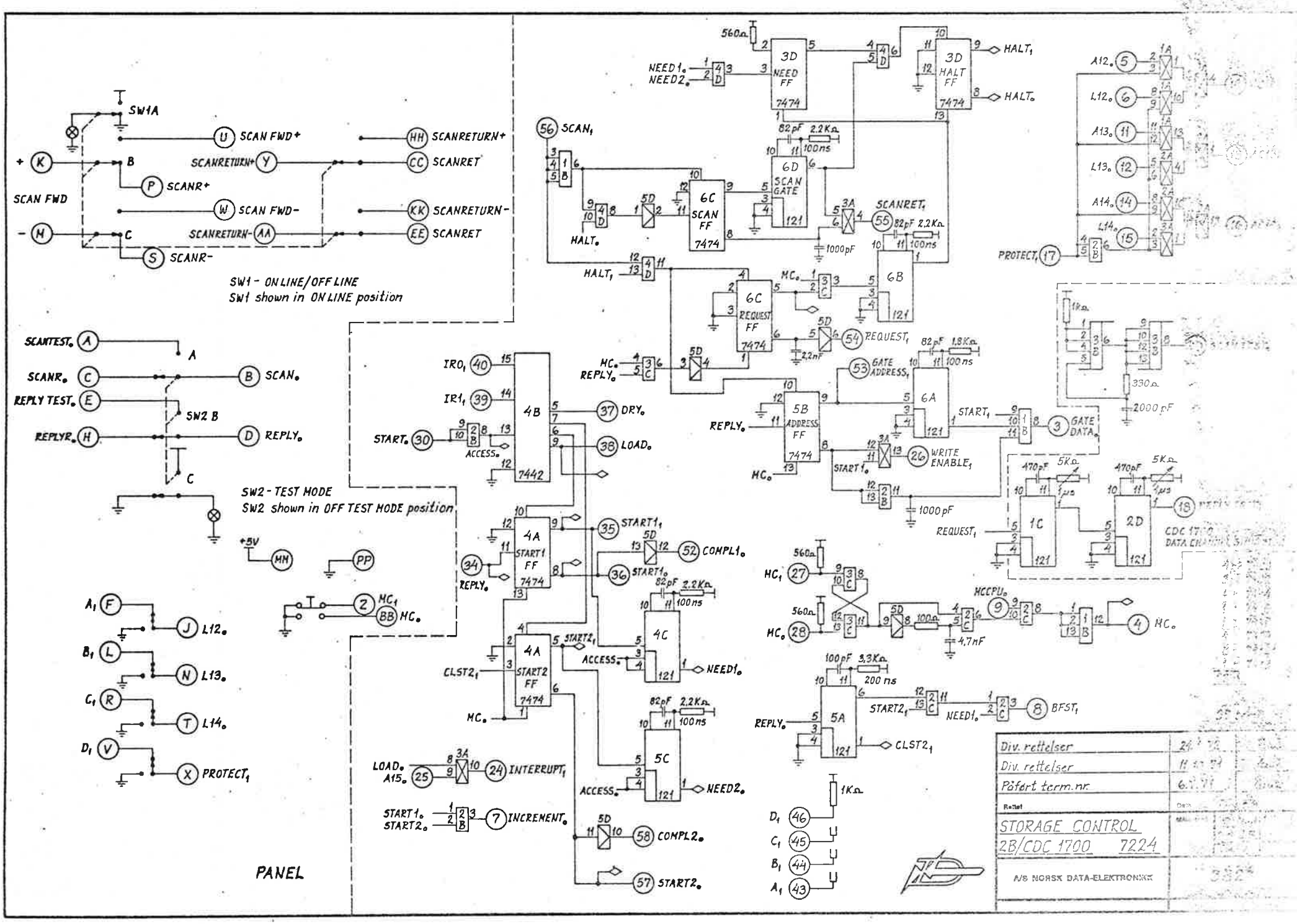
SW1A
SCAN FWD+
SCANRETURN+
SCANRET
SCAN FWD
SCANR+
SCAN FWD-
SCANRETURN-
SCANR-
SW1 - ON LINE/OFF LINE
SW1 shown in ON LINE position
SCANTEST
SCANR
REPLY TEST
REPLYR
SCAN
REPLY
SW2 B
SW2 - TEST MODE
SW2 shown in OFF TEST MODE position
+5V
PANEL
3D NEED FF 7474
3D HALT FF 7474
6D SCAN GATE 121
6C SCAN FF 7474
6C REQUEST FF 7474
6B 121
5B ADDRESS FF 7474
6A 121
4B 7442
4A START1 FF 7474
4A START2 FF 7474
4C 121
5C 121
1C 121
2D 121
5A 121
HALT
REQUEST
GATE ADDRESS
GATE DATA
WRITE ENABLE
INTERRUPT
INCREMENT
COMPL1
COMPL2
START2
BFST
PROTECT
Div. rettelser
Div. rettelser
Påført term.nr.
STORAGE CONTROL
2B/CDC 1700 7224
A/S NORSK DATA-ELEKTRONIKK

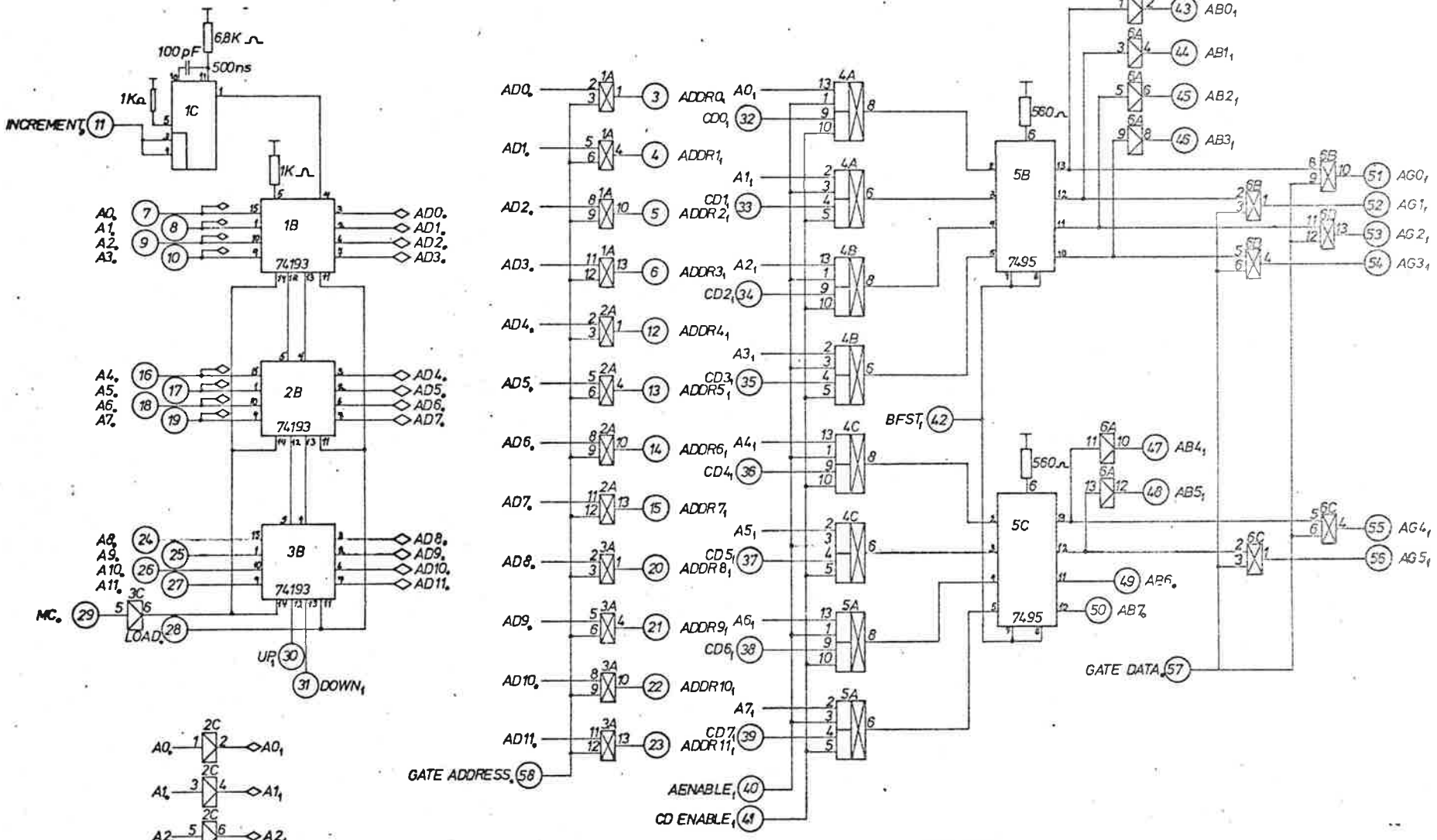

3 stk.	74193
1 stk.	74121
1 stk.	7404
5 stk.	7402
2 stk.	7495
4 stk.	7450
18 pks.	

56 Terminals

Div. rettelser	8.3.71
Påført pakkepos. og term.nr.	5.7.71
Rettet	Dato
ADDRESS & DATA REGISTERS .B - CDC 1700 7225	
A/S NORSK DATA-ELEKTRONIKK	3836

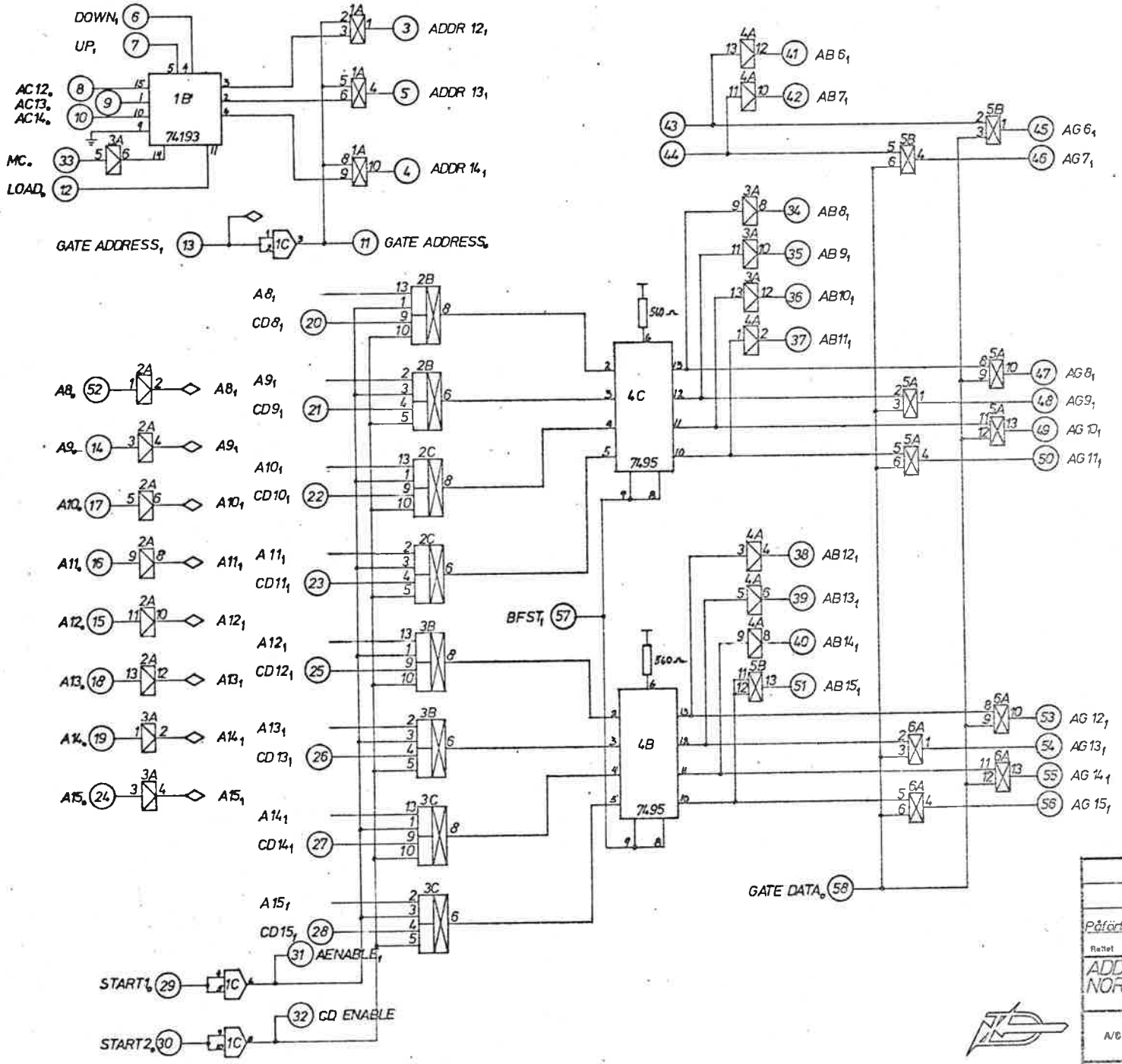

2 stk. 7495
1 stk. 74193
1 stk 7437
4 stk 7451
3 stk. 7404
4 stk. 7402
15 pks.

Påført pakkepos. og termnr.	5.7.1971
Rettet	Dato
ADDR & DATA REGS NORD 2B - CD 1700 7226	Målestokk
A/S NORSK DATA-ELEKTRONIKK	

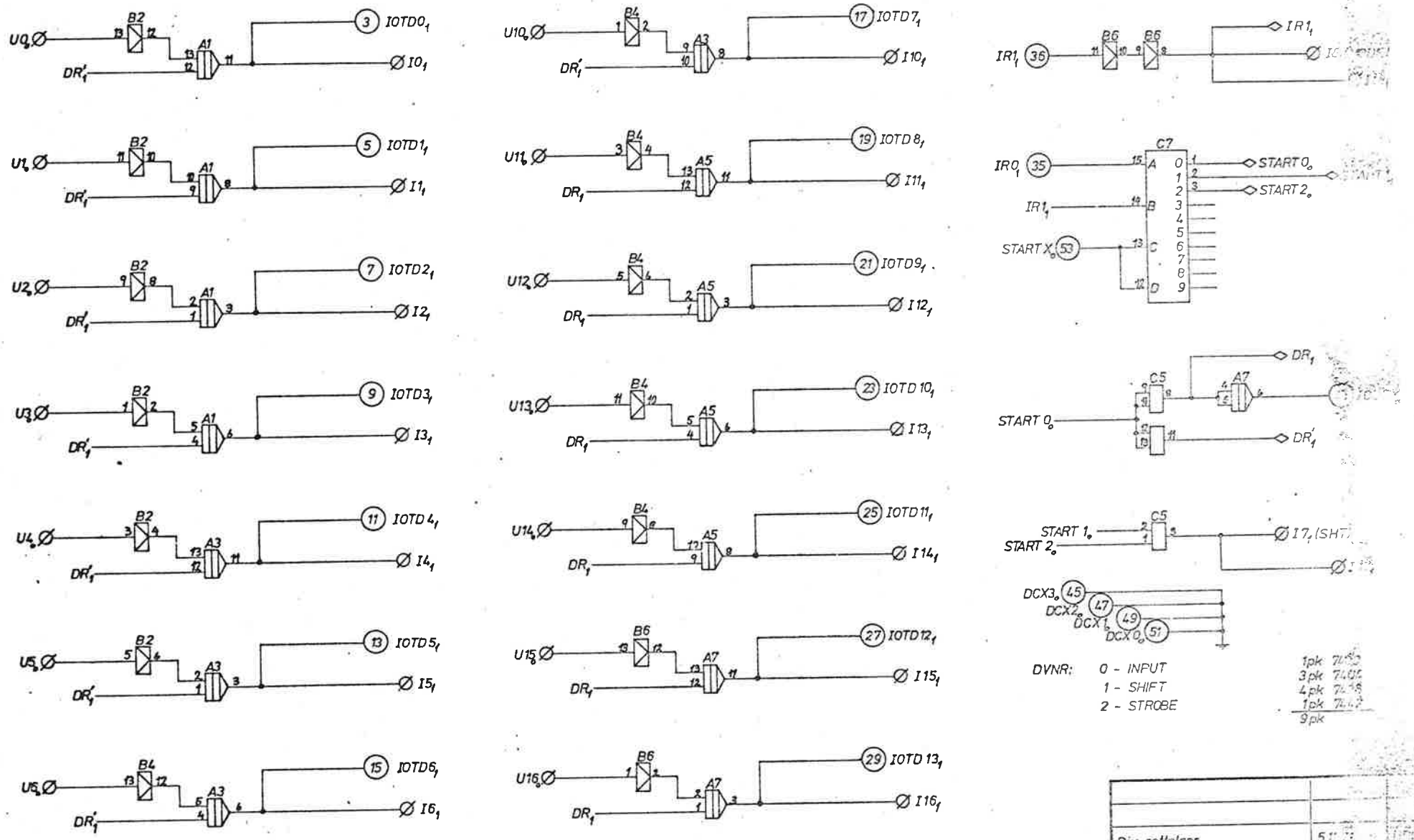
U0
DR'1
B2
A1
3 IOTD0
I0
U1
DR'1
B2
A1
5 IOTD1
I1
U2
DR'1
B2
A1
7 IOTD2
I2
U3
DR'1
B2
A1
9 IOTD3
I3
U4
DR'1
B2
A3
11 IOTD4
I4
U5
DR'1
B2
A3
13 IOTD5
I5
U6
DR'1
B4
A3
15 IOTD6
I6
U10
DR'1
B4
A3
17 IOTD7
I10
U11
DR1
B4
A5
19 IOTD8
I11
U12
DR1
B4
A5
21 IOTD9
I12
U13
DR1
B4
A5
23 IOTD10
I13
U14
DR1
B4
A5
25 IOTD11
I14
U15
DR1
B6
A7
27 IOTD12
I15
U16
DR1
B6
A7
29 IOTD13
I16
IR1 36
B6
B6
IR1
IR0 35
IR1
START X0 53
C7
START 0
START 2
DR1
START 0
C5
A7
DR'1
START 1
START 2
C5
I7 (SHT)
DCX3 45
DCX2
DCX1
DCX0 51
47
49
DVNR: 0 - INPUT
1 - SHIFT
2 - STROBE
1pk 7400
3pk 7400
4pk 7408
1pk 7442
9pk
Div rettelser
INTERFACE NORD-2B
TIL WIRE-TEST 7227
A/S NORSK DATA-ELEKTRONIKK

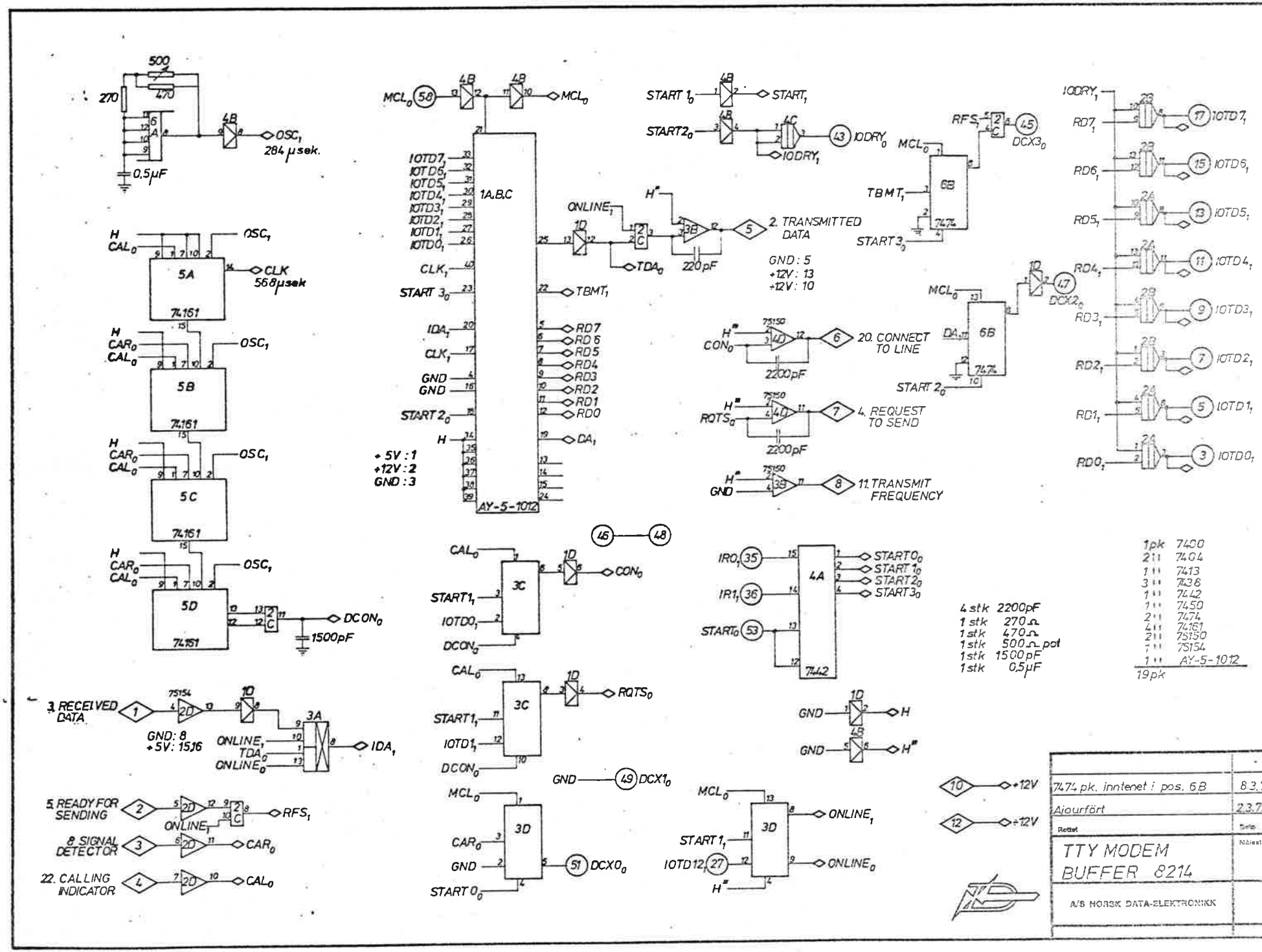
500
470
270
0,5µF
OSC1
284 µsek.
CLK
568µsek
74161
5A
5B
5C
5D
DCON0
1500pF
AY-5-1012
1A,B,C
TBMT1
IDA1
RD7
RD6
RD5
RD4
RD3
RD2
RD1
RD0
DA1
+5V : 1
+12V : 2
GND : 3
START 3
START 2
START 1
START 0
2. TRANSMITTED DATA
GND : 5
+12V : 13
+12V : 10
220pF
20. CONNECT TO LINE
2200pF
4. REQUEST TO SEND
11. TRANSMIT FREQUENCY
DCX3
DCX2
DCX1
DCX0
3. RECEIVED DATA
GND: 8
+5V: 15,16
ONLINE1
TDA0
ONLINE0
5. READY FOR SENDING
8. SIGNAL DETECTOR
22. CALLING INDICATOR
RFS
CAR0
CAL0
CON0
RQTS0
IOTD7
IOTD6
IOTD5
IOTD4
IOTD3
IOTD2
IOTD1
IOTD0
IODRY
IR0
IR1
4 stk 2200pF
1 stk 270Ω
1 stk 470Ω
1 stk 500Ω pot
1 stk 1500pF
1 stk 0,5µF
1pk 7400
2 " 7404
1 " 7413
3 " 7438
1 " 7442
1 " 7450
2 " 7474
4 " 74161
2 " 75150
1 " 75154
1 " AY-5-1012
19pk
7474 pk. inntenet i pos. 6B
8.3.72
Ajourført
2.3.72
TTY MODEM
BUFFER 8214
A/S NORSK DATA-ELEKTRONIKK
5A 14

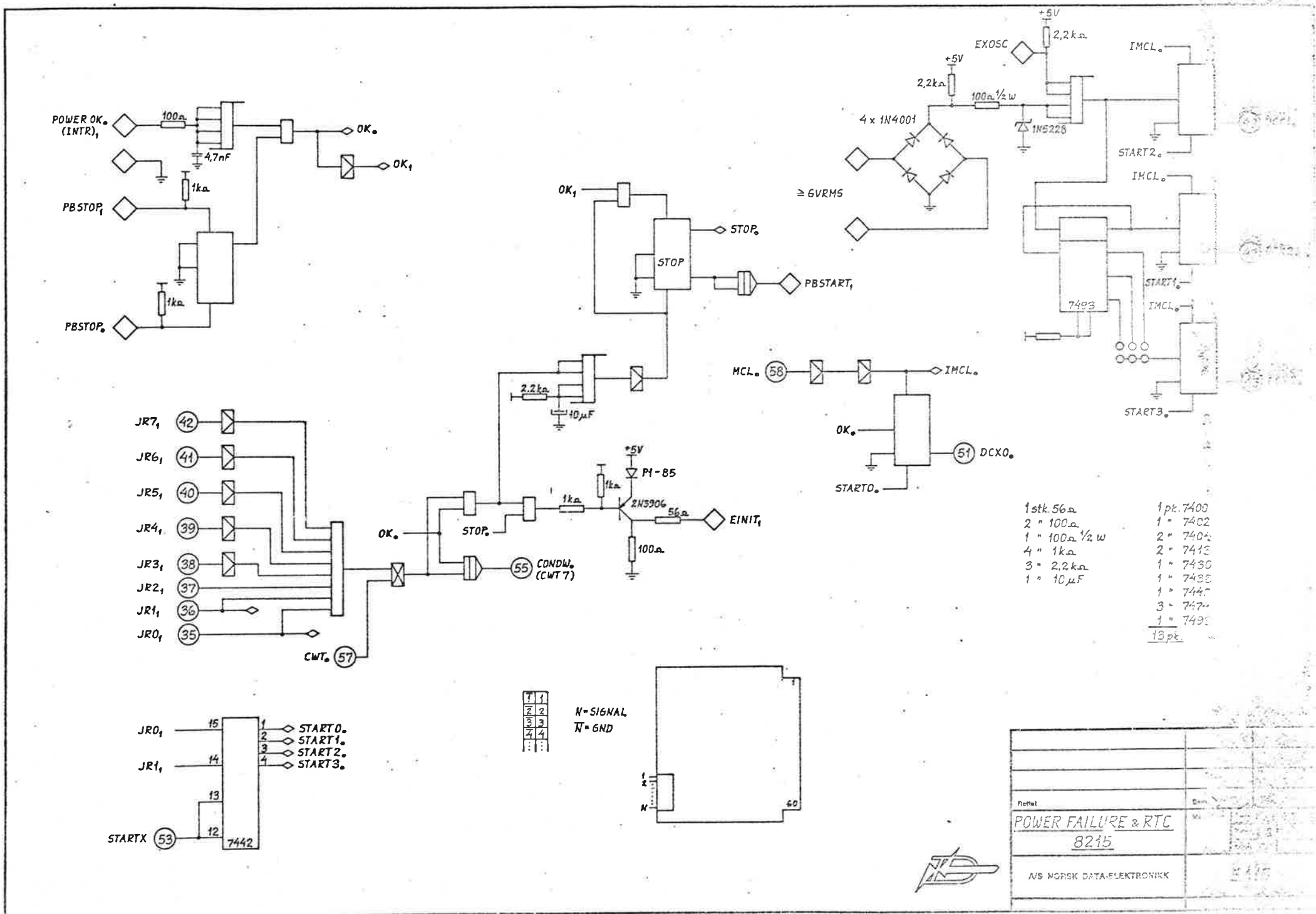
POWER OK (INTR)
100Ω
4,7nF
1kΩ
PBSTOP
PBSTOP
OK
OK
OK
STOP
STOP
PBSTART
2,2kΩ
10µF
JR7 42
JR6 41
JR5 40
JR4 39
JR3 38
JR2 37
JR1 36
JR0 35
CWT 57
OK
STOP
55 CONDW (CWT 7)
1kΩ
+5V
P1-85
2N3906
56Ω
100Ω
EINIT
JR0
JR1
15
14
13
12
7442
STARTX 53
START0
START1
START2
START3
N = SIGNAL
N̄ = GND
60
≥ 6VRMS
4 x 1N4001
+5V
2,2kΩ
100Ω ½ W
1N5228
EXOSC
+5V
2,2kΩ
IMCL
START2
IMCL
START1
IMCL
START3
7493
MCL 58
IMCL
OK
STARTO
51 DCXO
1 stk. 56Ω
2 " 100Ω
1 " 100Ω ½ W
4 " 1kΩ
3 " 2,2kΩ
1 " 10µF
1 pk. 7400
1 " 7402
2 " 7404
2 " 7413
1 " 7430
1 " 7438
1 " 7445
3 " 7474
1 " 7493
13 pk.
POWER FAILURE & RTC
8215
A/S NORSK DATA-ELEKTRONIKK

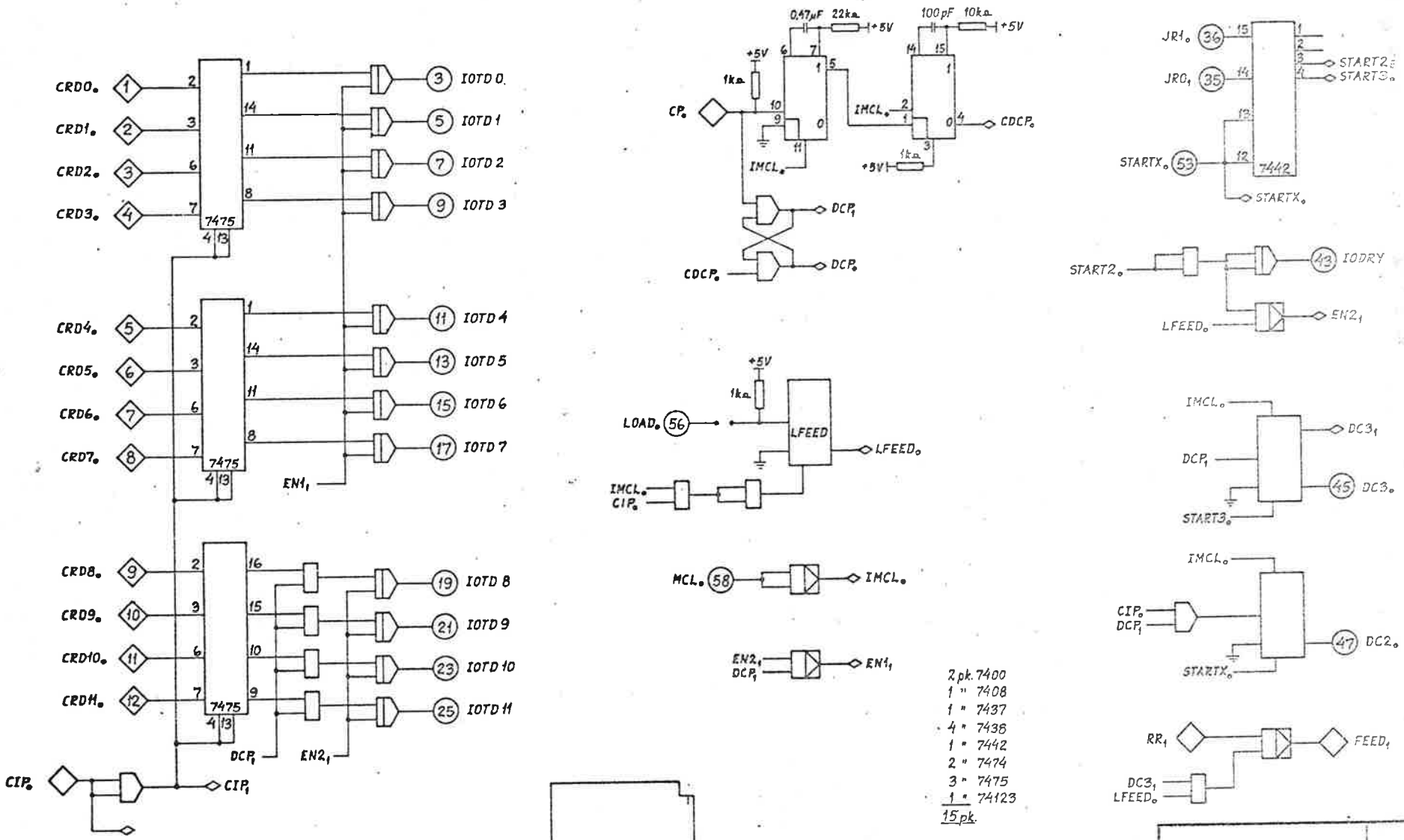
CRD0₀
CRD1₀
CRD2₀
CRD3₀
CRD4₀
CRD5₀
CRD6₀
CRD7₀
CRD8₀
CRD9₀
CRD10₀
CRD11₀
7475
IOTD 0
IOTD 1
IOTD 2
IOTD 3
IOTD 4
IOTD 5
IOTD 6
IOTD 7
IOTD 8
IOTD 9
IOTD 10
IOTD 11
EN1₁
EN2₁
DCP₁
CIP₀
CIP₁
0,47µF 22kΩ
100pF 10kΩ
+5V
1kΩ
CP₀
IMCL₀
CDCP₀
DCP₁
DCP₀
JR1₀
JR0₁
STARTX₀
7442
START2₀
START3₀
IODRY
LFEED₀
EN2₁
LOAD₀
LFEED
MCL₀
DC3₁
DC3₀
DC2₀
RR₁
FEED₁
2 pk. 7400
1 " 7408
1 " 7437
4 " 7438
1 " 7442
2 " 7474
3 " 7475
1 " 74123
15 pk.
1 stk. 22 kΩ
1 " 10 kΩ
3 " 1 kΩ
1 " 0,47 µF
1 " 100 pF
CARD READER BUFFER
8213
A/S NORSK DATA-ELEKTRONIKK

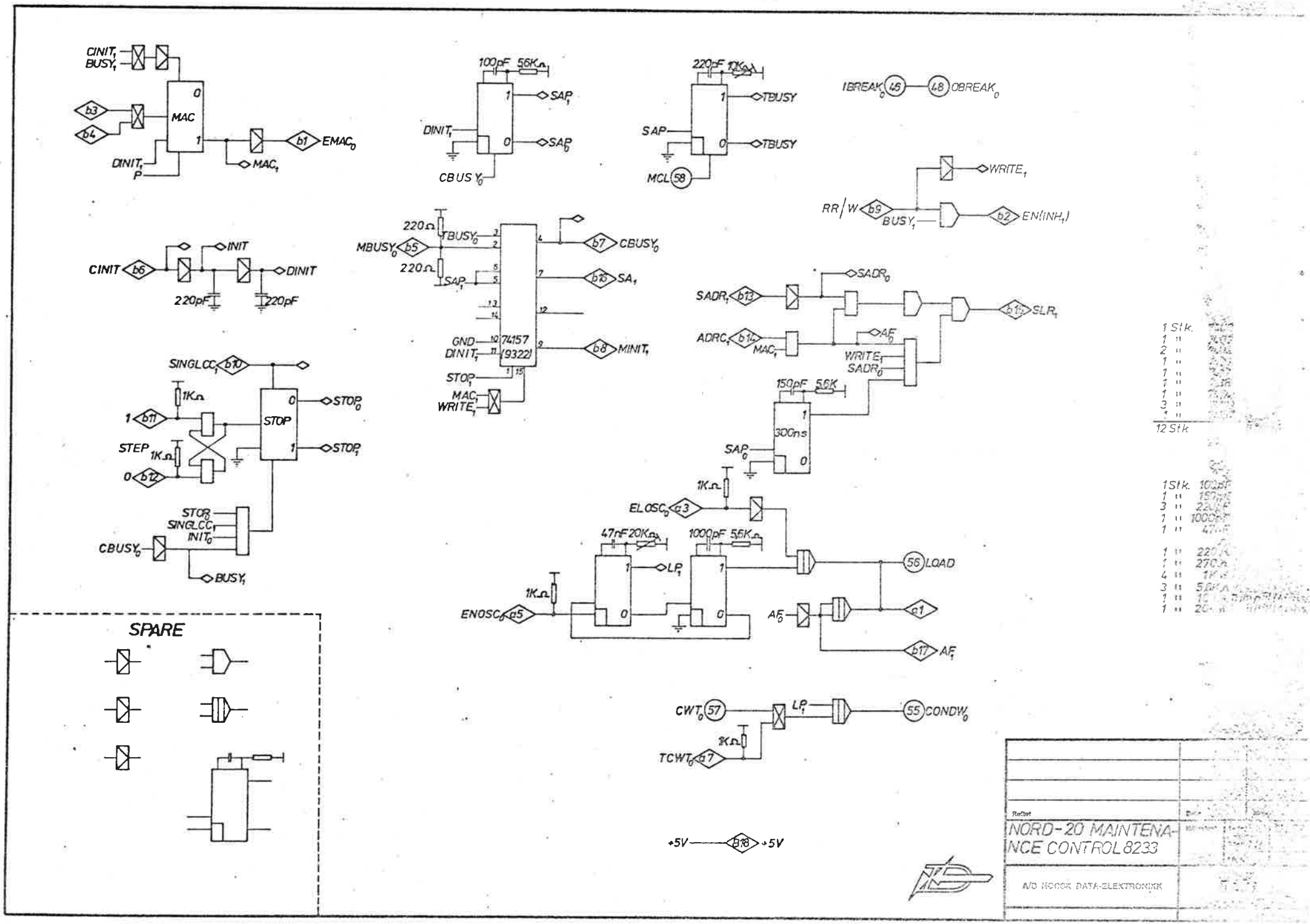
CINIT1
BUSY1
b3
b4
MAC
DINIT1
P
MAC1
b1
EMAC0
100pF 56KΩ
SAP1
DINIT1
SAP0
CBUSY0
220pF 1KΩ
TBUSY
SAP
TBUSY
MCL 58
IBREAK0 45
48 OBREAK0
WRITE1
RR/W b9
BUSY1
b2
EN(INH1)
CINIT b6
INIT
DINIT
220pF
220pF
220Ω
TBUSY0
MBUSY0 b5
220Ω
SAP1
b7 CBUSY0
b10 SA1
GND
DINIT1
74157
(9322)
b8 MINIT1
STOP1
MAC1
WRITE1
SADR0
SADR1 b13
b16 SLR1
ADRC1 b14
MAC1
AF0
WRITE1
SADR0
150pF 56K
300ns
SAP0
SINGLCC1 b10
1KΩ
1 b11
STOP
STOP0
STOP1
STEP 1KΩ
0 b12
STOP0
SINGLCC1
INIT0
CBUSY0
BUSY1
1KΩ
ELOSC0 a3
47nF 20KΩ
1000pF 56KΩ
LP1
56 LOAD
1KΩ
ENOSC0 a5
AF0
a1
b17 AF1
CWT0 57
LP1
55 CONDW0
2KΩ
TCWT0 b7
+5V b18 +5V
SPARE
1 Stk.
1 "
2 "
1 "
1 "
1 "
1 "
3 "
1 "
12 Stk
1 Stk. 100pF
1 " 150pF
3 " 220pF
1 " 1000pF
1 " 47nF
1 " 220KΩ
1 " 270Ω
4 " 1KΩ
3 " 56KΩ
1 " 10KΩ
1 " 20KΩ
NORD-20 MAINTENANCE CONTROL 8233
A/S NORSK DATA-ELEKTRONIKK

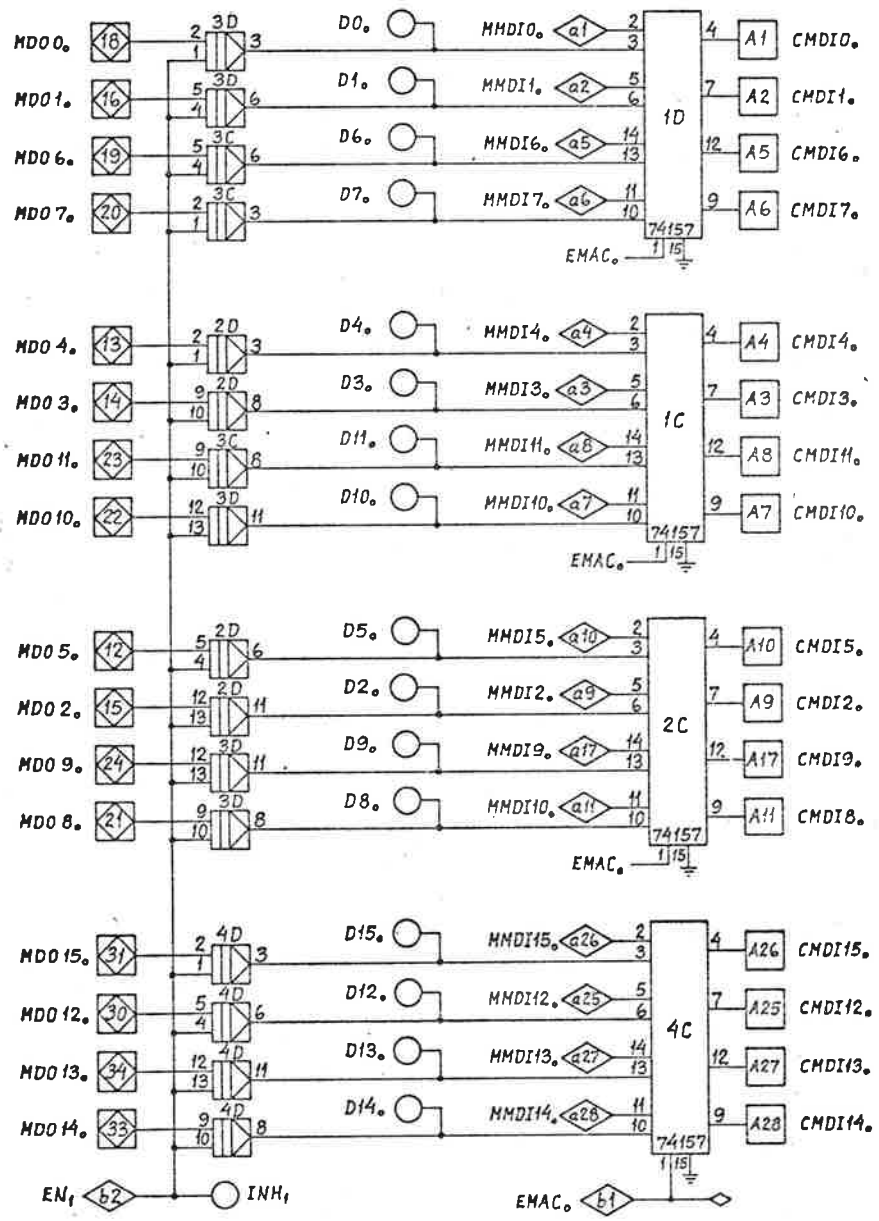

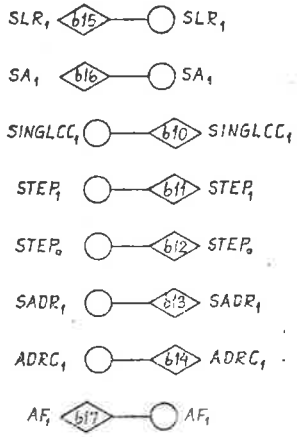

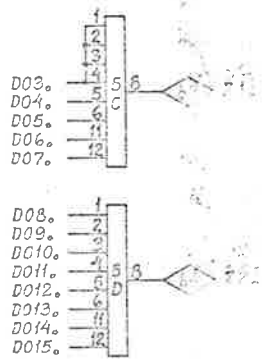

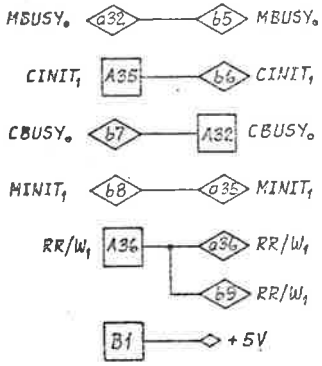

4 pk. 7409
2 " 7420
4 " 74157 (
10 pk.

2 stk. 18 pair Berg hou
1 " 10 " "
1 " 36 " Berg con
1 " 18 " "

= Female Berg con (housing)

= He male Berg con

= Direct connection

=

Netel	Dato
NORD-20 MAINTENANCE INTERFACE 8234	Navn
A/S NORSK DATA-ELEKTRONIKK	6139

THIS IS THE LOCATION LIST FOR THE SYSTEM NORD-20 . (DATE: 40272 .)

MODULE LOCATION LIST

MODULE CODE:	MODULE NAME:	LOCATION:
CO01	2013 CONTROL .01	A04
DC01	2012 DECODIN .01	A03
DE01	2031 DMAEXP .01	A26
DE02	2031 DMAEXP .02	A27
DE03	2031 DMAEXP .03	A28
EX01	2033 I/O EXP .01	A30
EX02	2033 I/O EXP .02	A31
EX03	2033 I/O EXP .03	A32
ID01	2032 IOTE DI .01	A29
IN01	2014 INTERFC .01	A01
IO01	STANDARD I/O .01	A10
IO02	STANDARD I/O .02	A11
IO03	STANDARD I/O .03	A12
IO04	STANDARD I/O .04	A13
IO05	STANDARD I/O .05	A14
IO06	STANDARD I/O .06	A15
IO07	STANDARD I/O .07	A16
IO11	STANDARD I/O .11	A19
IO12	STANDARD I/O .12	A20
IO13	STANDARD I/O .13	A21
IO14	STANDARD I/O .14	A22
IO15	STANDARD I/O .15	A23
IO16	STANDARD I/O .16	A24
IO17	STANDARD I/O .17	A25
IR01	2030 IR BUFF .01	A05
LB01	LOAD BUTTON .01	LBUX
MC01	2002 MEMCONT .01	A08
MU00	2015 MULTCON .00	A09
MU01	2015 MULTCON .01	A18
RA01	2010 REG+ARI .01	A06
RA02	2010 REG+ARI .02	A07
RB01	RING BUFFER .01	A17
RE01	REST BUTTON .01	RBUX
TI01	2011 TIMING .01	A02

MODULE CODE:	MODULE NAME:	LOCATION:
IN01	2014 INTERFC .01	A01
TI01	2011 TIMING .01	A02
DC01	2012 DECODIN .01	A03
CO01	2013 CONTROL .01	A04
IR01	2030 IR BUFF .01	A05
RA01	2010 REG+ARI .01	A06
RA02	2010 REG+ARI .02	A07
MC01	2002 MEMCONT .01	A08
MU00	2015 MULTCON .00	A09
IO01	STANDARD I/O .01	A10
IO02	STANDARD I/O .02	A11
IO03	STANDARD I/O .03	A12
IO04	STANDARD I/O .04	A13
IO05	STANDARD I/O .05	A14
IO06	STANDARD I/O .06	A15
IO07	STANDARD I/O .07	A16
RB01	RING BUFFER .01	A17
MU01	2015 MULTCON .01	A18
IO11	STANDARD I/O .11	A19
IO12	STANDARD I/O .12	A20
IO13	STANDARD I/O .13	A21
IO14	STANDARD I/O .14	A22
IO15	STANDARD I/O .15	A23
IO16	STANDARD I/O .16	A24
IO17	STANDARD I/O .17	A25
DE01	2031 DMAEXP .01	A26
DE02	2031 DMAEXP .02	A27
DE03	2031 DMAEXP .03	A28
ID01	2032 IOTE DI .01	A29
EX01	2033 I/O EXP .01	A30
EX02	2033 I/O EXP .02	A31
EX03	2033 I/O EXP .03	A32
LB01	LOAD BUTTON .01	LBUX
RE01	REST BUTTON .01	RBUX

MODULE LIST

THIS IS THE MODULE LIST FOR THE SYSTEM NORD-20 , (DATE: 40272)

MODULE: IN01 / 2014 INTERFC.01
LOCATION: A01

1	11 CC1 1	21 IR8 1	31 CPB0 0	41 CPB2 0	51 PBSTART
2	12 CC2 1	22 T3 0	32G IR6 1	42G SCZ 1	52 SMPRY 0
3W READ 1	13 PMRQ 0	23 IR12 1	33G IR2 1	43G IR0 1	53G EBA 0
4 MCL 0	14 ENRSTR 0	24G PSLD 0	34G IR5 1	44 CPB3 0	54G XCIN 0
5 PBLOAD 0	15 T1 0	25 IR11 1	35G IR3 1	45 IR14 1	55G BAS 0
6 DRY 0	16G RSL1 0	26G IR4 1	36 CPB1 0	46G IR7 1	56G JPL 0
7G PDRY01 0	17 IR10 1	27 INBREAK 0	37 IR13 1	47 CPB6 0	57 PBSTART 1
8 PBLOAD 1	18G IOT 0	28W RMRQ 0	38 IR15 1	48 CPB7 0	58G XSTART 0
9W LOAD 0	19G IR1 1	29W SMRQ 0	39 SCOSC 0	49 CPB5 0	59
10 CC0 1	20 IR9 1	30G RSL2 0	40 T4 0	50 CPB4 0	60

MODULE: TI01 / 2011 TIMING .01
LOCATION: A02

1	11 SCZ 1	21 EFFJD 1	31G CC2 1	41G MCL 0	51 CONN 0
2	12 MOF 1	22G IOTE1 0	32 IR6 1	42G IOTE 0	52 DPMRQ 0
3 EFFJ 1	13 LOAD 0	23G IOTE0 0	33 IR7 1	43 IONF 0	53G T3 0
4 AU79 1	14G PINT 0	24 MRF 0	34G T4CL 0	44 INTER 0	54G T2 0
5 XCIN 0	15 IOT 0	25 AU121 0	35 CONDINST 0	45G MONMD 1	55G T1 0
6G IOW 0	16 PDRY01 0	26G IOTE2 0	36G BDPM 1	46G CL 1	56G T4 0
7G RESTART 0	17 XSTART 0	27G IOTE3 0	37G IOTC 0	47 SHIFT 0	57G PMRQ 0
8 IODRY 0	18 AU4 1	28 IR5 1	38 ENRSTR 0	48G EC2 0	58G SCOSC 0
9 ARFIN 1	19 IMIN 1	29G CC0 1	39G AC1 1	49 CONDW 0	59
10 JPL 0	20G BDS 0	30G CC1 1	40G INT 0	50 AU181 1	60

MODULE: DC01 / 2012 DECODIN.01
LOCATION: A03

1	11G MOF 1	21G EFFJD 1	31 CPB9 0	41G IR12 1	51 SSTS 0
2	12G ZRB 0	22G PILO 0	32 CPB10 0	42 CPB15 0	52G IR14 1
3 CC2 1	13G CIN 1	23G CONDINST 0	33 IOSKIP 0	43 CPB14 0	53G IR13 1
4 CC1 1	14 INT 0	24G PIL3 0	34 CPB11 0	44 CPB13 0	54G AU4 1
5 CC0 1	15 T3 0	25G PIL2 0	35 SUMZ 1	45 CPB12 0	55 CL 1
6 RESTART 0	16G XOROP 0	26G PIL1 0	36G IR8 1	46G AU79 1	56G MRF 0
7 AUIR6 0	17 C 0	27 T4CL 0	37G IR9 1	47 CONDB 1	57 TRA 0
8G MPX1 0	18G IMIN 1	28 MONMD 1	38G IR10 1	48 RESTART 0	58G AU181 1
9G EFFJ 1	19G ANDOP 0	29G RBSLD 1	39G IR15 1	49 T4 0	59
10 SRCZ 0	20G MPX0 0	30 CPB8 0	40G IR11 1	50 T2 0	60

MODULE: C001 / 2013 CONTROL.01
LOCATION: A04

1		11	CPB6 0	21G	AUIR6 0	31G	RSTR 0	41	CL 1	51G	ZCPBH 0
2		12	CPB0 0	22G	C 0	32G	CWT 0	42G	Z 0	52G	ZCPBL 0
3G	CONDB 1	13	CPB12 0	23	CRY15 0	33G	IONF 0.	43G	DPMRQ 0	53G	ARFIN 1
4	CPB1 0	14	CPB11 0	24G	SH15 0	34G	ENRSTR 0	44G	WRG 0	54	SMPRV 0
5	CPB2 0	15	CPB10 0	25	OFLH 1	35G	TRA 0	45	CC1 1	55G	INVL 0
6	CPB3 0	16	CPB9 0	26G	SHIFT 0	36G	AU121 0	46	CC2 1	56	EC2 0
7G	K 0	17	CPB8 0	27	T4 0	37G	Q 0	47G	TRR 0	57G	INVH 0
8	CPB4 0	18	CPB15 0	28	MONMD 1	38G	O 0	48	CCO 1	58	AC1 1
9	CPB5 0	19	CPB13 0	29	SCOSC 0	39G	SSTS 0.	49	T3 0	59	
10	CPB7 0	20	CPB14 0	30G	M 0	40G	SRCZ 0.	50	T2 0	60	

MODULE: IR01 / 2030 IR BUFF.01
LOCATION: A05

1		11	TRR 0	21G	JR1 1	31	CPB7 0	41	CPB12 0	51G	JRIC 1
2		12	EC2 0	22	IR12 1	32	CPB8 0	42	CPB13 0	52	ARFIN 1
3	CC2 1	13	SSTS 0	23	IR11 1	33G	JR4 1	43	CPB14 0	53	IR15 1
4	CC1 1	14G	PROTON 0	24		34G	JR5 1	44	CPB15 0	54	CL 1
5	CCO 1	15G	MPRV 0	25G	JR2 1	35	T4 0	45G	JR8 1	55G	LOADL 0
6	T3 0	16G	SMPRV 0	26G	JR3 1	36	CPB11 0	46G	JR9 1	56G	RUNL 0
7	MCL 0	17	CPB0 0.	27	CPB3 0	37G	JR6 1	47		57	IR14 1
8	TRA 0	18	CPB1 0	28	CPB4 0	38G	JR7 1	48		58	IR13 1
9	PROTON 0	19	CPB2 0	29	CPB5 0	39	CPB10 0	49		59	
10	MONMD 1	20G	JRD 1	30	CPB6 0	40	CPB9 0	50	LOAD 0	60	

MODULE: RA01 / 2010 REG+ARI.01
LOCATION: A06

1		11	BDS 0	21G	CPB7 0	31W	MDB6 1	41	M 0	51W	MDB0 1
2		12	RBSL 1	22G	CPB3 0	32W	MDB3 1	42G	CPB1 0	52	RSL0 0
3	INVL 0	13	ZRB 0	23W	IOTD4 1	33W	MDB2 1	43	BAS 0	53	RSL1 0
4	XOROP 0	14	CIN 1	24W	IOTD6 1	34G	CPB5 0	44G	BDO 0	54	Z 0
5	ANDOP 0	15	MPX0 0	25G	CPB6 0	35W	MDB7 1	45	RBSLO 1	55	IONF 0
6	BDB 0	16G	CPB4 0	26	EBA 0	36W	MDB4 1	46	Q 0	56	RSL2 0
7	MPX1 0	17G	CPB2 0	27G	OFLL 1	37	IOW 0	47W	IOTD0 1	57	INTER 0
8	ZCPBL 0	18W	SUMZ 1	28W	MDB5 1	38	C 0	48	O 0	58	WRG 0
9G	CRY7 0	19W	IOTD5 1	29W	IOTD1 1	39W	IOTD3 1	49	K 0	59	
10	BDPM 1	20W	IOTD7 1	30G	CPB0 0	40W	MDB1 1	50W	IOTD2 1	60	

MODULE: RA02 / 2010 REG+ARI.02
LOCATION: A07

1		11	BDS 0	21G	CPB15 0	31W	MDB14 1	41	PROTON 0	51W	MDB8 1
2		12	RBSL 1	22G	CPB11 0	32W	MDB11 1	42G	CPB9 0	52	RSL0 0
3	INVH 0	13	ZRB 0	23W	IOTD12 1	33W	MDB10 1	43	BAS 0	53	RSL1 0
4	XOROP 0	14	CRY7 0	24W	IOTD14 1	34G	CPB13 0	44G	BDB 0	54	PIL3 0
5	ANDOP 0	15	MPX0 0	25G	CPB14 0	35W	MDB15 1	45	RBSLO 1	55	PIL0 0
6	SH15 0	16G	CPB12 0	26	EBA 0	36W	MDB12 1	46	PINT 0	56	RSL2 0
7	MPX1 0	17G	CPB10 0	27G	OFLH 0	37	IOW 0	47W	IOTD8 1	57	PIL1 0
8	ZCPBH 0	18W	SUMZ 1	28W	MDB13 1	38	RSTR 0	48	MPRV 0	58	WRG 0
9G	CRY15 0	19W	IOTD13 1	29W	IOTD9 1	39W	IOTD11 1	49	PIL2 0	59	
10	BDPM 1	20W	IOTD15 1	30G	CPB8 0	40W	MDB9 1.	50W	IOTD10 1	60	

MODULE: MC01 / 2002 MEMCONT.01
LOCATION: A08

1	11W IOTD4 1	21W IOTD9 1	31W IOTD14 1	41 JR6 1	51
2	12W MDB4 1	22W MDB9 1	32W MDB14 1	42 JR7 1	52W SMRQ 0
3W IOTD0 1	13W IOTD5 1	23W IOTD10 1	33W IOTD15 1	43W IODRY 0	53
4W MDB0 1	14W MDB5 1	24W MDB10 1	34W MDB15 1	44W RMRQ 0	54W DRY 0
5W IOTD1 1	15W IOTD6 1	25W IOTD11 1	35 JR0 1	45	55W CONDW 0
6W MDB1 1	16W MDB6 1	26W MDB11 1	36 JR1 1	46 INBREAK 0	56W LOAD 0
7W IOTD2 1	17W IOTD7 1	27W IOTD12 1	37 JR2 1	47	57 CRT 0
8W MDB2 1	18W MDB7 1	28W MDB12 1	38 JR3 1	48 INBREAK 0	58 MCL 0
9W IOTD3 1	19W IOTD8 1	29W IOTD13 1	39 JR4 1	49	59
10W MDB3 1	20W MDB8 1	30W MDB13 1	40 JR5 1	50W READ 1	60

MODULE: MU00 / 2015 MULTCON.00
LOCATION: A09

1	11 DC051 0	21 JR9 1	31 JR0 1	41 DC021 0	51G STARTO3
2	12 DC050 0	22 DC033 0	32W INTER 0	42 DC020 0	52G STARTO2
3 DC073 0	13 DC060 0	23 DC032 0	33 IOTD1 1	43 IOTD3 1	53G STARTO1
4 DC072 0	14 DC061 0	24 DC031 0	34 IOTD2 1	44 IOTD4 1	54 JR2 1
5 DC071 0	15 DC062 0	25 DC030 0	35 DC010 0	45 IOTD0 1	55 JR9 1
6 DC070 0	16 DC063 0	26 DC040 0	36 DC011 0	46 MCL 0	56
7W IOSKIP 0	17 JR10 1	27 DC041 0	37 DC012 0	47G STARTO7 0	57 JR3 1
8W IODRY 0	18 IOTE0 0	28 DC042 0	38 DC013 0	48G STARTO6 0	58 JR1 1
9 DC053 0	19 JR8 1	29 DC043 0	39 DC023 0	49G STARTO5 0	59
10 DC052 0	20 IOTC 0	30W CONN 0	40 DC022 0	50G STARTO4 0	60

MODULE: I001 / STANDARD I/O.01
LOCATION: A10

1	11W IOTD4 1	21W IOTD9 1	31W IOTD14 1	41 JR6 1	51G DC010 0
2	12W MDB4 1	22W MDB9 1	32W MDB14 1	42 JR7 1	52W SMRQ 0
3W IOTD0 1	13W IOTD5 1	23W IOTD10 1	33W IOTD15 1	43W IODRY 0	53 STARTO1
4W MDB0 1	14W MDB5 1	24W MDB10 1	34W MDB15 1	44W RMRQ 0	54W DRY 0
5W IOTD1 1	15W IOTD6 1	25W IOTD11 1	35 JR0 1	45G DC013 0	55W CONDW 0
6W MDB1 1	16W MDB6 1	26W MDB11 1	36 JR1 1	46 01BREAK 0	56W LOAD 0
7W IOTD2 1	17W IOTD7 1	27W IOTD12 1	37 JR2 1	47G DC012 0	57 CRT 0
8W MDB2 1	18W MDB7 1	28W MDB12 1	38 JR3 1	48G INBREAK 0	58 MCL 0
9W IOTD3 1	19W IOTD8 1	29W IOTD13 1	39 JR4 1	49G DC011 0	59
10W MDB3 1	20W MDB8 1	30W MDB13 1	40 JR5 1	50W READ 1	60

MODULE: I002 / STANDARD I/O.02
LOCATION: A11

1	11W IOTD4 1	21W IOTD9 1	31W IOTD14 1	41 JR6 1	51G DC020 0
2	12W MDB4 1	22W MDB9 1	32W MDB14 1	42 JR7 1	52W SMRQ 0
3W IOTD0 1	13W IOTD5 1	23W IOTD10 1	33W IOTD15 1	43W IODRY 0	53 STARTO2
4W MDB0 1	14W MDB5 1	24W MDB10 1	34W MDB15 1	44W RMRQ 0	54W DRY 0
5W IOTD1 1	15W IOTD6 1	25W IOTD11 1	35 JR0 1	45G DC023 0	55W CONDW 0
6W MDB1 1	16W MDB6 1	26W MDB11 1	36 JR1 1	46 02BREAK 0	56W LOAD 0
7W IOTD2 1	17W IOTD7 1	27W IOTD12 1	37 JR2 1	47G DC022 0	57 CRT 0
8W MDB2 1	18W MDB7 1	28W MDB12 1	38 JR3 1	48G 01BREAK 0	58 MCL 0
9W IOTD3 1	19W IOTD8 1	29W IOTD13 1	39 JR4 1	49G DC021 0	59
10W MDB3 1	20W MDB8 1	30W MDB13 1	40 JR5 1	50W READ 1	60

MODULE: I003 / STANDARD I/O.03
LOCATION: A12

1	11W IOTD4 1	21W IOTD9 1	31W IOTD14 1	41 JR6 1	51G DC030 0
2	12W MDB4 1	22W MDB9 1	32W MDB14 1	42 JR7 1	52W SMRQ 0
3W IOTD0 1	13W IOTD5 1	23W IOTD10 1	33W IOTD15 1	43W IODRY 0	53 STARTO3
4W MDB0 1	14W MDB5 1	24W MDB10 1	34W MDB15 1	44W RMRQ 0	54W DRY 0
5W IOTD1 1	15W IOTD6 1	25W IOTD11 1	35 JR0 1	45G DC033 0	55W CONDW 0
6W MDB1 1	16W MDB6 1	26W MDB11 1	36 JR1 1	46 O3BREAK 0	56W LOAD 0
7W IOTD2 1	17W IOTD7 1	27W IOTD12 1	37 JR2 1	47G DC032 0	57 CWT 0
8W MDB2 1	18W MDB7 1	28W MDB12 1	38 JR3 1	48G O2BREAK 0	58 MCL 0
9W IOTD3 1	19W IOTD8 1	29W IOTD13 1	39 JR4 1	49G DC031 0	59
10W MDB3 1	20W MDB8 1	30W MDB13 1	40 JR5 1	50W READ 1	60

MODULE: I004 / STANDARD I/O.04
LOCATION: A13

1	11W IOTD4 1	21W IOTD9 1	31W IOTD14 1	41 JR6 1	51G DC040 0
2	12W MDB4 1	22W MDB9 1	32W MDB14 1	42 JR7 1	52W SMRQ 0
3W IOTD0 1	13W IOTD5 1	23W IOTD10 1	33W IOTD15 1	43W IODRY 0	53 STARTO4
4W MDB0 1	14W MDB5 1	24W MDB10 1	34W MDB15 1	44W RMRQ 0	54W DRY 0
5W IOTD1 1	15W IOTD6 1	25W IOTD11 1	35 JR0 1	45G DC043 0	55W CONDW 0
6W MDB1 1	16W MDB6 1	26W MDB11 1	36 JR1 1	46 O4BREAK 0	56W LOAD 0
7W IOTD2 1	17W IOTD7 1	27W IOTD12 1	37 JR2 1	47G DC042 0	57 CWT 0
8W MDB2 1	18W MDB7 1	28W MDB12 1	38 JR3 1	48G O3BREAK 0	58 MCL 0
9W IOTD3 1	19W IOTD8 1	29W IOTD13 1	39 JR4 1	49G DC041 0	59
10W MDB3 1	20W MDB8 1	30W MDB13 1	40 JR5 1	50W READ 1	60

MODULE: I005 / STANDARD I/O.05
LOCATION: A14

1	11W IOTD4 1	21W IOTD9 1	31W IOTD14 1	41 JR6 1	51G DC050 0
2	12W MDB4 1	22W MDB9 1	32W MDB14 1	42 JR7 1	52W SMRQ 0
3W IOTD0 1	13W IOTD5 1	23W IOTD10 1	33W IOTD15 1	43W IODRY 0	53 STARTO5
4W MDB0 1	14W MDB5 1	24W MDB10 1	34W MDB15 1	44W RMRQ 0	54W DRY 0
5W IOTD1 1	15W IOTD6 1	25W IOTD11 1	35 JR0 1	45G DC053 0	55W CONDW 0
6W MDB1 1	16W MDB6 1	26W MDB11 1	36 JR1 1	46 O5BREAK 0	56W LOAD 0
7W IOTD2 1	17W IOTD7 1	27W IOTD12 1	37 JR2 1	47G DC052 0	57 CWT 0
8W MDB2 1	18W MDB7 1	28W MDB12 1	38 JR3 1	48G O4BREAK 0	58 MCL 0
9W IOTD3 1	19W IOTD8 1	29W IOTD13 1	39 JR4 1	49G DC051 0	59
10W MDB3 1	20W MDB8 1	30W MDB13 1	40 JR5 1	50W READ 1	60

MODULE: I006 / STANDARD I/O.06
LOCATION: A15

1	11W IOTD4 1	21W IOTD9 1	31W IOTD14 1	41 JR6 1	51G DC060 0
2	12W MDB4 1	22W MDB9 1	32W MDB14 1	42 JR7 1	52W SMRQ 0
3W IOTD0 1	13W IOTD5 1	23W IOTD10 1	33W IOTD15 1	43W IODRY 0	53 STARTO6
4W MDB0 1	14W MDB5 1	24W MDB10 1	34W MDB15 1	44W RMRQ 0	54W DRY 0
5W IOTD1 1	15W IOTD6 1	25W IOTD11 1	35 JR0 1	45G DC063 0	55W CONDW 0
6W MDB1 1	16W MDB6 1	26W MDB11 1	36 JR1 1	46 O6BREAK 0	56W LOAD 0
7W IOTD2 1	17W IOTD7 1	27W IOTD12 1	37 JR2 1	47G DC062 0	57 CWT 0
8W MDB2 1	18W MDB7 1	28W MDB12 1	38 JR3 1	48G O5BREAK 0	58 MCL 0
9W IOTD3 1	19W IOTD8 1	29W IOTD13 1	39 JR4 1	49G DC061 0	59
10W MDB3 1	20W MDB8 1	30W MDB13 1	40 JR5 1	50W READ 1	60

MODULE: IOD7 / STANDARD I/O.07
LOCATION: A16

1	11W IOTD4 1	21W IOTD9 1	31W IOTD14 1	41 JR6 1	51G DC070 0
2	12W MDB4 1	22W MDB9 1	32W MDB14 1	42 JR7 1	52W SMRQ 0
3W IOTD0 1	13W IOTD5 1	23W IOTD10 1	33W IOTD15 1	43W IODRY 0	53 STARTD 0
4W MDB0 1	14W MDB5 1	24W MDB10 1	34W MDB15 1	44W RMRQ 0	54W DRY 0
5W IOTD1 1	15W IOTD6 1	25W IOTD11 1	35 JR0 1	45G DC073 0	55W CONDW 0
6W MDB1 1	16W MDB6 1	26W MDB11 1	36 JR1 1	46 07BREAK 0	56W LOAD 0
7W IOTD2 1	17W IOTD7 1	27W IOTD12 1	37 JR2 1	47G DC072 0	57 CWT 0
8W MDB2 1	18W MDB7 1	28W MDB12 1	38 JR3 1	48G 06BREAK 0	58 MCL 0
9W IOTD3 1	19W IOTD8 1	29W IOTD13 1	39 JR4 1	49G DC071 0	59
10W MDB3 1	20W MDB8 1	30W MDB13 1	40 JR5 1	50W READ 1	60

MODULE: RBC1 / RING BUFFER .01
LOCATION: A17

1	11W 1IOTD4 1	21W 1IOTD9 1	31W 1IOTD14 1	41G 1JR6 1	51 1IODRY 0
2	12W IOTD4 1	22W IOTD9 1	32W IOTD14 1	42G 1JR7 1	52W IODRY 0
3W 1IOTD0 1	13W 1IOTD5 1	23W 1IOTD10 1	33W 1IOTD15 1	43 JR0 1	53 1CONDW 0
4W IOTD0 1	14W IOTD5 1	24W IOTD10 1	34W IOTD15 1	44 JR1 1	54W CONDW 0
5W 1IOTD1 1	15W 1IOTD6 1	25W 1IOTD11 1	35G 1JR0 1	45 JR2 1	55G 1CWT 0
6W IOTD1 1	16W IOTD6 1	26W IOTD11 1	36G 1JR1 1	46 JR3 1	56 CWT 0
7W 1IOTD2 1	17W 1IOTD7 1	27W 1IOTD12 1	37G 1JR2 1	47 JR4 1	57G 1MCL 0
8W IOTD2 1	18W IOTD7 1	28W IOTD12 1	38G 1JR3 1	48 JR5 1	58 MCL 0
9W 1IOTD3 1	19W 1IOTD8 1	29W 1IOTD13 1	39G 1JR4 1	49 JR6 1	59
10W IOTD3 1	20W IOTD8 1	30W IOTD13 1	40G 1JR5 1	50 JR7 1	60

MODULE: MUD1 / 2015 MULTCON.01
LOCATION: A18

1	11 DC151 0	21 JR9 1	31 JR0 1	41 DC121 0	51G START13 0
2	12 DC150 0	22 DC133 0	32W INTER 0	42 DC120 0	52G START12 0
3 DC173 0	13 DC160 0	23 DC132 0	33 1IOTD1 1	43 1IOTD3 1	53G START11 0
4 DC172 0	14 DC161 0	24 DC131 0	34 1IOTD2 1	44 1IOTD4 1	54 1JR2 1
5 DC171 0	15 DC162 0	25 DC130 0	35 DC110 0	45 1IOTD0 1	55 1JR4 1
6 DC170 0	16 DC163 0	26 DC140 0	36 DC111 0	46 1MCL 0	56
7W IOSKIP 0	17 JR10 1	27 DC141 0	37 DC112 0	47G START17 0	57 1JR3 1
8W 1IODRY 0	18 IOTE1 0	28 DC142 0	38 DC113 0	48G START16 0	58 1JR1 1
9 DC153 0	19 JR8 1	29 DC143 0	39 DC123 0	49G START15 0	59
10 DC152 0	20 IOTC 0	30W CONN 0	40 DC122 0	50G START14 0	60

MODULE: IO11 / STANDARD I/O.11
LOCATION: A19

1	11W 1IOTD4 1	21W 1IOTD9 1	31W 1IOTD14 1	41 1JR6 1	51G DC110 0
2	12W MDB4 1	22W MDB9 1	32W MDB14 1	42 1JR7 1	52W SMRQ 0
3W 1IOTD0 1	13W 1IOTD5 1	23W 1IOTD10 1	33W 1IOTD15 1	43W 1IODRY 0	53 STARTI1 0
4W MDB0 1	14W MDB5 1	24W MDB10 1	34W MDB15 1	44W RMRQ 0	54W DRY 0
5W 1IOTD1 1	15W 1IOTD6 1	25W 1IOTD11 1	35 1JR0 1	45G DC113 0	55W 1CONDW 0
6W MDB1 1	16W MDB6 1	26W MDB11 1	36 1JR1 1	46 11BREAK 0	56W LOAD 0
7W 1IOTD2 1	17W 1IOTD7 1	27W 1IOTD12 1	37 1JR2 1	47G DC112 0	57 1CWT 0
8W MDB2 1	18W MDB7 1	28W MDB12 1	38 1JR3 1	48G 07BREAK 0	58 1MCL 0
9W 1IOTD3 1	19W 1IOTD8 1	29W 1IOTD13 1	39 1JR4 1	49G DC111 0	59
10W MDB3 1	20W MDB8 1	30W MDB13 1	40 1JR5 1	50W READ 1	60

MODULE: I012 / STANDARD I/O.12
LOCATION: A20

1	11W 1IOTD4 1	21W 1IOTD9 1	31W 1IOTD14 1	41 1JR6 1	51G DC120 0
2	12W MDB4 1	22W MDB9 1	32W MDB14 1	42 1JR7 1	52W SMRQ 0
3W 1IOTD0 1	13W 1IOTD5 1	23W 1IOTD10 1	33W 1IOTD15 1	43W 1IODRY 0	53 START12 0
4W MDB0 1	14W MDB5 1	24W MDB10 1	34W MDB15 1	44W RMRQ 0	54W DRY 0
5W 1IOTD1 1	15W 1IOTD6 1	25W 1IOTD11 1	35 1JR0 1	45G DC123 0	55W 1CONDW 0
6W MDB1 1	16W MDB6 1	26W MDB11 1	36 1JR1 1	46 12BREAK 0	56W LOAD 0
7W 1IOTD2 1	17W 1IOTD7 1	27W 1IOTD12 1	37 1JR2 1	47G DC122 0	57 1CRT 0
8W MDB2 1	18W MDB7 1	28W MDB12 1	38 1JR3 1	48G 11BREAK 0	58 1MCL 0
9W 1IOTD3 1	19W 1IOTD8 1	29W 1IOTD13 1	39 1JR4 1	49G DC121 0	59
10W MDB3 1	20W MDB8 1	30W MDB13 1	40 1JR5 1	50W READ 1	60

MODULE: I013 / STANDARD I/O.13
LOCATION: A21

1	11W 1IOTD4 1	21W 1IOTD9 1	31W 1IOTD14 1	41 1JR6 1	51G DC130 0
2	12W MDB4 1	22W MDB9 1	32W MDB14 1	42 1JR7 1	52W SMRQ 0
3W 1IOTD0 1	13W 1IOTD5 1	23W 1IOTD10 1	33W 1IOTD15 1	43W 1IODRY 0	53 START13 0
4W MDB0 1	14W MDB5 1	24W MDB10 1	34W MDB15 1	44W RMRQ 0	54W DRY 0
5W 1IOTD1 1	15W 1IOTD6 1	25W 1IOTD11 1	35 1JR0 1	45G DC133 0	55W 1CONDW 0
6W MDB1 1	16W MDB6 1	26W MDB11 1	36 1JR1 1	46 13BREAK 0	56W LOAD 0
7W 1IOTD2 1	17W 1IOTD7 1	27W 1IOTD12 1	37 1JR2 1	47G DC132 0	57 1CRT 0
8W MDB2 1	18W MDB7 1	28W MDB12 1	38 1JR3 1	48G 12BREAK 0	58 1MCL 0
9W 1IOTD3 1	19W 1IOTD8 1	29W 1IOTD13 1	39 1JR4 1	49G DC131 0	59
10W MDB3 1	20W MDB8 1	30W MDB13 1	40 1JR5 1	50W READ 1	60

MODULE: I014 / STANDARD I/O.14
LOCATION: A22

1	11W 1IOTD4 1	21W 1IOTD9 1	31W 1IOTD14 1	41 1JR6 1	51G DC140 0
2	12W MDB4 1	22W MDB9 1	32W MDB14 1	42 1JR7 1	52W SMRQ 0
3W 1IOTD0 1	13W 1IOTD5 1	23W 1IOTD10 1	33W 1IOTD15 1	43W 1IODRY 0	53 START14 0
4W MDB0 1	14W MDB5 1	24W MDB10 1	34W MDB15 1	44W RMRQ 0	54W DRY 0
5W 1IOTD1 1	15W 1IOTD6 1	25W 1IOTD11 1	35 1JR0 1	45G DC143 0	55W 1CONDW 0
6W MDB1 1	16W MDB6 1	26W MDB11 1	36 1JR1 1	46 14BREAK 0	56W LOAD 0
7W 1IOTD2 1	17W 1IOTD7 1	27W 1IOTD12 1	37 1JR2 1	47G DC142 0	57 1CRT 0
8W MDB2 1	18W MDB7 1	28W MDB12 1	38 1JR3 1	48G 13BREAK 0	58 1MCL 0
9W 1IOTD3 1	19W 1IOTD8 1	29W 1IOTD13 1	39 1JR4 1	49G DC141 0	59
10W MDB3 1	20W MDB8 1	30W MDB13 1	40 1JR5 1	50W READ 1	60

MODULE: I015 / STANDARD I/O.15
LOCATION: A23

1	11W 1IOTD4 1	21W 1IOTD9 1	31W 1IOTD14 1	41 1JR6 1	51G DC150 0
2	12W MDB4 1	22W MDB9 1	32W MDB14 1	42 1JR7 1	52W SMRQ 0
3W 1IOTD0 1	13W 1IOTD5 1	23W 1IOTD10 1	33W 1IOTD15 1	43W 1IODRY 0	53 START15 0
4W MDB0 1	14W MDB5 1	24W MDB10 1	34W MDB15 1	44W RMRQ 0	54W DRY 0
5W 1IOTD1 1	15W 1IOTD6 1	25W 1IOTD11 1	35 1JR0 1	45G DC153 0	55W 1CONDW 0
6W MDB1 1	16W MDB6 1	26W MDB11 1	36 1JR1 1	46 15BREAK 0	56W LOAD 0
7W 1IOTD2 1	17W 1IOTD7 1	27W 1IOTD12 1	37 1JR2 1	47G DC152 0	57 1CRT 0
8W MDB2 1	18W MDB7 1	28W MDB12 1	38 1JR3 1	48G 14BREAK 0	58 1MCL 0
9W 1IOTD3 1	19W 1IOTD8 1	29W 1IOTD13 1	39 1JR4 1	49G DC151 0	59
10W MDB3 1	20W MDB8 1	30W MDB13 1	40 1JR5 1	50W READ 1	60

MODULE: I016 / STANDARD I/O.16
LOCATION: A24

1	11W 1IOTD4 1	21W 1IOTD9 1	31W 1IOTD14 1	41 1JR6 1	51G DC160 0
2	12W MDB4 1	22W MDB9 1	32W MDB14 1	42 1JR7 1	52W SMRQ 0
3W 1IOTD0 1	13W 1IOTD5 1	23W 1IOTD10 1	33W 1IOTD15 1	43W 1IODRY 0	53 START16 0
4W MDB0 1	14W MDB5 1	24W MDB10 1	34W MDB15 1	44W RMRQ 0	54W DRY 0
5W 1IOTD1 1	15W 1IOTD6 1	25W 1IOTD11 1	35 1JR0 1	45G DC163 0	55W 1CONDW 0
6W MDB1 1	16W MDB6 1	26W MDB11 1	36 1JR1 1	46 16BREAK 0	56W LOAD 0
7W 1IOTD2 1	17W 1IOTD7 1	27W 1IOTD12 1	37 1JR2 1	47G DC162 0	57 1CWT 0
8W MDB2 1	18W MDB7 1	28W MDB12 1	38 1JR3 1	48G 15BREAK 0	58 1MCL 0
9W 1IOTD3 1	19W 1IOTD8 1	29W 1IOTD13 1	39 1JR4 1	49G DC161 0	59
10W MDB3 1	20W MDB8 1	30W MDB13 1	40 1JR5 1	50W READ 1	60

MODULE: I017 / STANDARD I/O.17
LOCATION: A25

1	11W 1IOTD4 1	21W 1IOTD9 1	31W 1IOTD14 1	41 1JR6 1	51G DC170 0
2	12W MDB4 1	22W MDB9 1	32W MDB14 1	42 1JR7 1	52W SMRQ 0
3W 1IOTD0 1	13W 1IOTD5 1	23W 1IOTD10 1	33W 1IOTD15 1	43W 1IODRY 0	53 START17 0
4W MDB0 1	14W MDB5 1	24W MDB10 1	34W MDB15 1	44W RMRQ 0	54W DRY 0
5W 1IOTD1 1	15W 1IOTD6 1	25W 1IOTD11 1	35 1JR0 1	45G DC173 0	55W 1CONDW 0
6W MDB1 1	16W MDB6 1	26W MDB11 1	36 1JR1 1	46 17BREAK 0	56W LOAD 0
7W 1IOTD2 1	17W 1IOTD7 1	27W 1IOTD12 1	37 1JR2 1	47G DC172 0	57 1CWT 0
8W MDB2 1	18W MDB7 1	28W MDB12 1	38 1JR3 1	48G 16BREAK 0	58 1MCL 0
9W 1IOTD3 1	19W 1IOTD8 1	29W 1IOTD13 1	39 1JR4 1	49G DC171 0	59
10W MDB3 1	20W MDB8 1	30W MDB13 1	40 1JR5 1	50W READ 1	60

MODULE: DEC1 / 2031 DMAEXP .01
LOCATION: A26

1	11W 1IOTD4 1	21W 1IOTD9 1	31W 1IOTD14 1	41 1JR6 1	51W CONN 0
2	12W MDB4 1	22W MDB9 1	32W MDB14 1	42 1JR7 1	52W SMRQ 0
3W 1IOTD0 1	13W 1IOTD5 1	23W 1IOTD10 1	33W 1IOTD15 1	43W 1IODRY 0	53 1IOTE 0
4W MDB0 1	14W MDB5 1	24W MDB10 1	34W MDB15 1	44W RMRQ 0	54W DRY 0
5W 1IOTD1 1	15W 1IOTD6 1	25W 1IOTD11 1	35 1JR0 1	45W INTER 0	55W 1CONDW 0
6W MDB1 1	16W MDB6 1	26W MDB11 1	36 1JR1 1	46 37BREAK 0	56W LOAD 0
7W 1IOTD2 1	17W 1IOTD7 1	27W 1IOTD12 1	37 1JR2 1	47 -5V	57 1CWT 0
8W MDB2 1	18W MDB7 1	28W MDB12 1	38 1JR3 1	48G 17BREAK 0	58 1MCL 0
9W 1IOTD3 1	19W 1IOTD8 1	29W 1IOTD13 1	39 1JR4 1	49W IOSKIP 0	59
10W MDB3 1	20W MDB8 1	30W MDB13 1	40 1JR5 1	50W READ 1	60

MODULE: DEC2 / 2031 DMAEXP .02
LOCATION: A27

1	11W 1IOTD4 1	21W 1IOTD9 1	31W 1IOTD14 1	41 1JR6 1	51W CONN 0
2	12W MDB4 1	22W MDB9 1	32W MDB14 1	42 1JR7 1	52W SMRQ 0
3W 1IOTD0 1	13W 1IOTD5 1	23W 1IOTD10 1	33W 1IOTD15 1	43 1IODRY 0	53 2IOTE 0
4W MDB0 1	14W MDB5 1	24W MDB10 1	34W MDB15 1	44W RMRQ 0	54W DRY 0
5W 1IOTD1 1	15W 1IOTD6 1	25W 1IOTD11 1	35 1JR0 1	45W INTER 0	55W 1CONDW 0
6W MDB1 1	16W MDB6 1	26W MDB11 1	36 1JR1 1	46 57BREAK 0	56W LOAD 0
7W 1IOTD2 1	17W 1IOTD7 1	27W 1IOTD12 1	37 1JR2 1	47 -5V	57 1CWT 0
8W MDB2 1	18W MDB7 1	28W MDB12 1	38 1JR3 1	48G 37BREAK 0	58 1MCL 0
9W 1IOTD3 1	19W 1IOTD8 1	29W 1IOTD13 1	39 1JR4 1	49W IOSKIP 0	59
10W MDB3 1	20W MDB8 1	30W MDB13 1	40 1JR5 1	50W READ 1	60

MODULE: DE03 / 2031 DMAEXP .03
LOCATION: A28

1		11W	1IOTD4 1	21W	1IOTD9 1	31W	1IOTD14 1	41	1JR6 1	51W	CONN O
2		12W	MDB4 1	22W	MDB9 1	32W	MDB14 1	42	1JR7 1	52W	SMRQ O
3W	1IOTD0 1	13W	1IOTD5 1	23W	1IOTD10 1	33W	1IOTD15 1	43W	1IODRY O	53	3IOTE O
4W	MDB0 1	14W	MDB5 1	24W	MDB10 1	34W	MDB15 1	44W	RMRQ O	54W	DRY O
5W	1IOTD1 1	15W	1IOTD6 1	25W	1IOTD11 1	35	1JR0 1	45W	INTER O	55W	1CONDW O
6W	MDB1 1	16W	MDB6 1	26W	MDB11 1	36	1JR1 1	46	77BREAK O	56W	LOAD O
7W	1IOTD2 1	17W	1IOTD7 1	27W	1IOTD12 1	37	1JR2 1	47	-5V	57	1CNT O
8W	MDB2 1	18W	MDB7 1	28W	MDB12 1	38	1JR3 1	48G	57BREAK O	58	1MCL O
9W	1IOTD3 1	19W	1IOTD8 1	29W	1IOTD13 1	39	1JR4 1	49W	IOSKIP O	59	
10W	MDB3 1	20W	MDB8 1	30W	MDB13 1	40	1JR5 1	50W	READ 1	60	

MODULE: IO01 / 2032 IOTE DI.01
LOCATION: A29

1		11		21		31		41	1JR6 1	51	
2		12		22		32		42	1JR7 1	52	
3		13		23		33		43		53	
4		14		24		34		44		54	
5		15		25		35		45		55	
6		16		26		36		46		56	
7		17		27		37		47G	1IOTE O	57	
8		18	IOTE O	28		38		48G	2IOTE O	58	
9		19		29		39		49G	3IOTE O	59	
10		20		30		40		50		60	

MODULE: EX01 / 2033 I/O EXP.01
LOCATION: A30

1		11	1IOTD4 1	21	1IOTD9 1	31	1IOTD14 1	41	1JR6 1	51W	INTER O
2		12		22		32		42	1JR7 1	52	
3	1IOTD0 1	13	1IOTD5 1	23	1IOTD10 1	33	1IOTD15 1	43	1IODRY O	53	IOTC O
4		14		24		34		44	JR8 1	54W	1CONDW O
5	1IOTD1 1	15	1IOTD6 1	25	1IOTD11 1	35	1JR0 1	45	JR9 1	55	1CNT O
6		16		26		36	1JR1 1	46	JR10 1	56W	CONN O
7	1IOTD2 1	17	1IOTD7 1	27	1IOTD12 1	37	1JR2 1	47	-5V	57W	IOSKIP O
8		18		28		38	1JR3 1	48	1IOTE O	58	1MCL O
9	1IOTD3 1	19	1IOTD8 1	29	1IOTD13 1	39	1JR4 1	49		59	
10		20		30		40	1JR5 1	50		60	

MODULE: EX02 / 2033 I/O EXP.02
LOCATION: A31

1		11	1IOTD4 1	21	1IOTD9 1	31	1IOTD14 1	41	1JR6 1	51W	INTER O
2		12		22		32		42	1JR7 1	52	
3	1IOTD0 1	13	1IOTD5 1	23	1IOTD10 1	33	1IOTD15 1	43	1IODRY O	53	IOTC O
4		14		24		34		44	JR8 1	54W	1CONDW O
5	1IOTD1 1	15	1IOTD6 1	25	1IOTD11 1	35	1JR0 1	45	JR9 1	55	1CNT O
6		16		26		36	1JR1 1	46	JR10 1	56W	CONN O
7	1IOTD2 1	17	1IOTD7 1	27	1IOTD12 1	37	1JR2 1	47	-5V	57W	IOSKIP O
8		18		28		38	1JR3 1	48	2IOTE O	58	1MCL O
9	1IOTD3 1	19	1IOTD8 1	29	1IOTD13 1	39	1JR4 1	49		59	
10		20		30		40	1JR5 1	50		60	

```
          MODULE:     EX03 / 2033 I/O EXP.03
        LOCATION:     A32

 1                   11  1IOTD4 1        21  1IOTD9 1        31  1IOTD14 1       41  1JR6 1          51W INTER 0
 2                   12                   22                  32                  42  1JR7 1          52
 3  1IOTD0 1         13  1IOTD5 1         23  1IOTD10 1       33  1IOTD15 1      43  1IODRY 0        53  IOTC 0
 4                   14                   24                  34                  44  JR8 1           54W ICONDW 0
 5  1IOTD1 1         15  1IOTD6 1         25  1IOTD11 1       35  1JR0 1          45  JR9 1           55  1CWT 0
 6                   16                   26                  36  1JR1 1          46  JR10 1          56W CONN 0
 7  1IOTD2 1         17  1IOTD7 1         27  1IOTD12 1       37  1JR2 1          47  -5V             57W IOSKIP 0
 8                   18                   28                  38  1JR3 1          48  3IOTE 0         58  1MCL 0
 9  1IOTD3 1         19  1IOTD8 1         29  1IOTD13 1       39  1JR4 1          49                  59
10                   20                   30                  40  1JR5 1          50                  60

          MODULE:     LB01 / LOAD BUTTON .01
        LOCATION:     LBUX

 1  GND
 2G PBLOAD 1
 3G PBLOAD 0
 4  GND
 5  LOADL 0
 6  +5V
          MODULE:     RE01 / REST BUTTON .01
        LOCATION:     RBUX

 1  GND
 2G PBSTART 0
 3G PBSTART 1
 4  GND
 5  RUNL 0
 6  +5V
END OF MODULE LIST
```

THIS IS THE SIGNAL NAME LIST FOR THE SYSTEM NORD-20 . (DATE: 40272)

****
S I G N A L N A M E L I S T
****

LACK OF INPUT IS INDICATED BY A *
NUMBER OF OUTPUTS--N

SIGNAL NAME	TERMINALS
AC1 1	A02 :39G A04 :58
ANDOP 0	A03 :19G A06 : 5 A07 : 5
ARFIN 1	A02 : 9 A04 :53G A05 :52
AUIR6 0	A03 : 7 A04 :21G
AU121 0	A02 :25 A04 :36G
AU181 1	A02 :50 A03 :58G
AU4 1	A02 :18 A03 :54G
AU79 1	A02 : 4 A03 :46G
BAS 0	A01 :55G A06 :43 A07 :43
BDPM 1	A02 :36G A06 :10 A07 :10
BDS 0	A02 :20G A06 :11 A07 :11
BDO 0	A06 :44G
BDB 0	A06 : 6 A07 :44G
C 0	A03 :17 A04 :22G A06 :38
CC0 1	A01 :10 A02 :29G A03 : 5 A04 :48 A05 : 5
CC1 1	A01 :11 A02 :30G A03 : 4 A04 :45 A05 : 4
CC2 1	A01 :12 A02 :31G A03 : 3 A04 :46 A05 : 3
CIN 1	A03 :13G A06 :14
CL 1	A02 :46G A03 :55 A04 :41 A05 :54
CONDB 1	A03 :47 A04 : 3G
CONDINST 0	A02 :35 A03 :23G
CONDW 0	A02 :49 A08 :55W A10 :55W A11 :55W A12 :55W A13 :55W A14 :55W A15 :55W A16 :55W A17 :54W
CONN 0	A02 :51 A09 :30W A18 :30W A26 :51W A27 :51W A28 :51W A30 :56W A31 :56W A32 :56W
CPB0 0	A01 :31 A04 :12 A05 :17 A06 :30G
CPB1 0	A01 :36 A04 : 4 A05 :18 A06 :42G
CPB10 0	A03 :32 A04 :15 A05 :39 A07 :17G
CPB11 0	A03 :34 A04 :14 A05 :36 A07 :22G
CPB12 0	A03 :45 A04 :13 A05 :41 A07 :16G
CPB13 0	A03 :44 A04 :19 A05 :42 A07 :34G
CPB14 0	A03 :43 A04 :20 A05 :43 A07 :25G
CPB15 0	A03 :42 A04 :18 A05 :44 A07 :21G
CPB2 0	A01 :41 A04 : 5 A05 :19 A06 :17G
CPB3 0	A01 :44 A04 : 6 A05 :27 A06 :22G
CPB4 0	A01 :50 A04 : 8 A05 :28 A06 :16G
CPB5 0	A01 :49 A04 : 9 A05 :29 A06 :34G
CPB6 0	A01 :47 A04 :11 A05 :30 A06 :25G
CPB7 0	A01 :48 A04 :10 A05 :31 A06 :21G
CPB8 0	A03 :30 A04 :17 A05 :32 A07 :30G
CPB9 0	A03 :31 A04 :16 A05 :40 A07 :42G
CRY15 0	A04 :23 A07 : 9G
CRY7 0	A06 : 9G A07 :14
CWT 0	A04 :32G A08 :57 A10 :57 A11 :57 A12 :57 A13 :57 A14 :57 A15 :57 A16 :57 A17 :56
DC010 0	A09 :35 A10 :51G
DC011 0	A09 :36 A10 :49G
DC012 0	A09 :37 A10 :47G
DC013 0	A09 :38 A10 :45G
DC020 0	A09 :42 A11 :51G

```
DC021 O          A09 :41  A11 :49G
DC022 O          A09 :40  A11 :47G
DC023 O          A09 :39  A11 :45G
DC030 O          A09 :25  A12 :51G
DC031 O          A09 :24  A12 :49G
DC032 O          A09 :23  A12 :47G
DC033 O          A09 :22  A12 :45G
DC040 O          A09 :26  A13 :51G
DC041 O          A09 :27  A13 :49G
DC042 O          A09 :28  A13 :47G
DC043 O          A09 :29  A13 :45G
DC050 O          A09 :12  A14 :51G
DC051 O          A09 :11  A14 :49G
DC052 O          A09 :10  A14 :47G
DC053 O          A09 : 9  A14 :45G
DC060 O          A09 :13  A15 :51G
DC061 O          A09 :14  A15 :49G
DC062 O          A09 :15  A15 :47G
DC063 O          A09 :16  A15 :45G
DC070 O          A09 : 6  A16 :51G
DC071 O          A09 : 5  A16 :49G
DC072 O          A09 : 4  A16 :47G
DC073 O          A09 : 3  A16 :45G
DC110 O          A18 :35  A19 :51G
DC111 O          A18 :36  A19 :49G
DC112 O          A18 :37  A19 :47G
DC113 O          A18 :38  A19 :45G
DC120 O          A18 :42  A20 :51G
DC121 O          A18 :41  A20 :49G
DC122 O          A18 :40  A20 :47G
DC123 O          A18 :39  A20 :45G
DC130 O          A18 :25  A21 :51G
DC131 O          A18 :24  A21 :49G
DC132 O          A18 :23  A21 :47G
DC133 O          A18 :22  A21 :45G
DC140 O          A18 :26  A22 :51G
DC141 O          A18 :27  A22 :49G
DC142 O          A18 :28  A22 :47G
DC143 O          A18 :29  A22 :45G
DC150 O          A18 :12  A23 :51G
DC151 O          A18 :11  A23 :49G
DC152 O          A18 :10  A23 :47G
DC153 O          A18 : 9  A23 :45G
DC160 O          A18 :13  A24 :51G
DC161 O          A18 :14  A24 :49G
DC162 O          A18 :15  A24 :47G
DC163 O          A18 :16  A24 :45G
DC170 O          A18 : 6  A25 :51G
DC171 O          A18 : 5  A25 :49G
DC172 O          A18 : 4  A25 :47G
DC173 O          A18 : 3  A25 :45G
DPMRG O          A02 :52  A04 :43G
DRY O            A01 : 6  A08 :54W A10 :54W A11 :54W A12 :54W A13 :54W A14 :54W A15 :54W A16 :54W
                 A19 :54W A20 :54W A21 :54W A22 :54W A23 :54W A24 :54W A25 :54W A26 :54W A27 :54W
                 A28 :54W
EBA O            A01 :53G A06 :26  A07 :26
EC2 O            A02 :48G A04 :56  A05 :12
EFFJ 1           A02 : 3  A03 : 9G
EFFJD 1          A02 :21  A03 :21G
ENRSTR O         A01 :14  A02 :38  A04 :34G
GND              LBUX: 1  LBUX: 4  RBUX: 1  RBUX: 4
IMIN 1           A02 :19  A03 :18G
```

```
INBREAK 0     A01 :27  A08 :46  A08 :48  A10 :48G
INT 0         A02 :40G A03 :14
INTER 0       A02 :44  A06 :57  A09 :32W A18 :32W A26 :45W A27 :45W A28 :45W A30 :51W A31 :51W
              A32 :51W
INVH 0        A04 :57G A07 : 3
INVL 0        A04 :55G A06 : 3
IODRY 0       A02 : 8  A08 :43W A09 : 8W A10 :43W A11 :43W A12 :43W A13 :43W A14 :43W A15 :43W
              A16 :43W A17 :52W
IONF 0        A02 :43  A04 :33G A06 :55
IOSKIP 0      A03 :33  A09 : 7W A18 : 7W A26 :49W A27 :49W A28 :49W A30 :57W A31 :57W A32 :57W

IOT 0         A01 :18G A02 :15
IOTC 0        A02 :37G A09 :20  A18 :20  A30 :53  A31 :53  A32 :53
IOTD0 1       A06 :47W A08 : 3W A09 :45  A10 : 3W A11 : 3W A12 : 3W A13 : 3W A14 : 3W A15 : 3W
              A16 : 3W A17 : 4W
IOTD1 1       A06 :29W A08 : 5W A09 :33  A10 : 5W A11 : 5W A12 : 5W A13 : 5W A14 : 5W A15 : 5W
              A16 : 5W A17 : 6W
IOTD10 1      A07 :50W A08 :23W A10 :23W A11 :23W A12 :23W A13 :23W A14 :23W A15 :23W A16 :23W
              A17 :24W
IOTD11 1      A07 :39W A08 :25W A10 :25W A11 :25W A12 :25W A13 :25W A14 :25W A15 :25W A16 :25W
              A17 :26W
IOTD12 1      A07 :23W A08 :27W A10 :27W A11 :27W A12 :27W A13 :27W A14 :27W A15 :27W A16 :27W
              A17 :28W
IOTD13 1      A07 :19W A08 :29W A10 :29W A11 :29W A12 :29W A13 :29W A14 :29W A15 :29W A16 :29W
              A17 :30W
IOTD14 1      A07 :24W A08 :31W A10 :31W A11 :31W A12 :31W A13 :31W A14 :31W A15 :31W A16 :31W
              A17 :32W
IOTD15 1      A07 :20W A08 :33W A10 :33W A11 :33W A12 :33W A13 :33W A14 :33W A15 :33W A16 :33W
              A17 :34W
IOTD2 1       A06 :50W A08 : 7W A09 :34  A10 : 7W A11 : 7W A12 : 7W A13 : 7W A14 : 7W A15 : 7W
              A16 : 7W A17 : 8W
IOTD3 1       A06 :39W A08 : 9W A09 :43  A10 : 9W A11 : 9W A12 : 9W A13 : 9W A14 : 9W A15 : 9W
              A16 : 9W A17 :10W
IOTD4 1       A06 :23W A08 :11W A09 :44  A10 :11W A11 :11W A12 :11W A13 :11W A14 :11W A15 :11W
              A16 :11W A17 :12W
IOTD5 1       A06 :19W A08 :13W A10 :13W A11 :13W A12 :13W A13 :13W A14 :13W A15 :13W A16 :13W
              A17 :14W
IOTD6 1       A06 :24W A08 :15W A10 :15W A11 :15W A12 :15W A13 :15W A14 :15W A15 :15W A16 :15W
              A17 :16W
IOTD7 1       A06 :20W A08 :17W A10 :17W A11 :17W A12 :17W A13 :17W A14 :17W A15 :17W A16 :17W
              A17 :18W
IOTD8 1       A07 :47W A08 :19W A10 :19W A11 :19W A12 :19W A13 :19W A14 :19W A15 :19W A16 :19W
              A17 :20W
IOTD9 1       A07 :29W A08 :21W A10 :21W A11 :21W A12 :21W A13 :21W A14 :21W A15 :21W A16 :21W
              A17 :22W
IOTE 0        A02 :42G A29 :18
IOTE0 0       A02 :23G A09 :18
IOTE1 0       A02 :22G A18 :18
IOTE2 0       A02 :26G
IOTE3 0       A02 :27G
IOW 0         A02 : 6G A06 :37  A07 :37
IR0 1         A01 :43G
IR1 1         A01 :19G
IR10 1        A01 :17  A03 :38G
IR11 1        A01 :25  A03 :40G A05 :23
IR12 1        A01 :23  A03 :41G A05 :22
IR13 1        A01 :37  A03 :53G A05 :58
IR14 1        A01 :45  A03 :52G A05 :57
IR15 1        A01 :38  A03 :39G A05 :53
IR2 1         A01 :33G
IR3 1         A01 :35G
IR4 1         A01 :26G
```

```
IR5 1          A01 :34G A02 :28
IR6 1          A01 :32G A02 :32
IR7 1          A01 :46G A02 :33
IR8 1          A01 :21  A03 :36G
IR9 1          A01 :20  A03 :37G
JPL 0          A01 :56G A02 :10
JRO 1          A05 :20G A08 :35  A09 :31  A10 :35  A11 :35  A12 :35  A13 :35  A14 :35  A15 :35
               A16 :35  A17 :43  A18 :31
JR1 1          A05 :21G A08 :36  A09 :58  A10 :36  A11 :36  A12 :36  A13 :36  A14 :36  A15 :36
               A16 :36  A17 :44
JR10 1         A05 :51G A09 :17  A18 :17  A30 :46  A31 :46  A32 :46
JR2 1          A05 :25G A08 :37  A09 :54  A10 :37  A11 :37  A12 :37  A13 :37  A14 :37  A15 :37
               A16 :37  A17 :45
JR3 1          A05 :26G A08 :38  A09 :57  A10 :38  A11 :38  A12 :38  A13 :38  A14 :38  A15 :38
               A16 :38  A17 :46
JR4 1          A05 :33G A08 :39  A09 :55  A10 :39  A11 :39  A12 :39  A13 :39  A14 :39  A15 :39
               A16 :39  A17 :47
JR5 1          A05 :34G A08 :40  A10 :40  A11 :40  A12 :40  A13 :40  A14 :40  A15 :40  A16 :40
               A17 :48
JR6 1          A05 :37G A08 :41  A10 :41  A11 :41  A12 :41  A13 :41  A14 :41  A15 :41  A16 :41
               A17 :49
JR7 1          A05 :38G A08 :42  A10 :42  A11 :42  A12 :42  A13 :42  A14 :42  A15 :42  A16 :42
               A17 :50
JR8 1          A05 :45G A09 :19  A18 :19  A30 :44  A31 :44  A32 :44
JR9 1          A05 :46G A09 :21  A18 :21  A30 :45  A31 :45  A32 :45
K 0            A04 : 7G A06 :49
LOAD 0         A01 : 9W A02 :13  A05 :50  A08 :56W A10 :56W A11 :56W A12 :56W A13 :56W A14 :56W
               A15 :56W A16 :56W A19 :56W A20 :56W A21 :56W A22 :56W A23 :56W A24 :56W A25 :56W
               A26 :56W A27 :56W A28 :56W
LOADL 0        A05 :55G LBUX: 5
M 0            A04 :30G A06 :41
MCL 0          A01 : 4  A02 :41G A05 : 7  A08 :58  A09 :46  A10 :58  A11 :58  A12 :58  A13 :58
               A14 :58  A15 :58  A16 :58  A17 :58
MDB0 1         A06 :51W A08 : 4W A10 : 4W A11 : 4W A12 : 4W A13 : 4W A14 : 4W A15 : 4W A16 : 4W
               A19 : 4W A20 : 4W A21 : 4W A22 : 4W A23 : 4W A24 : 4W A25 : 4W A26 : 4W A27 : 4W
               A28 : 4W
MDB1 1         A06 :40W A08 : 6W A10 : 6W A11 : 6W A12 : 6W A13 : 6W A14 : 6W A15 : 6W A16 : 6W
               A19 : 6W A20 : 6W A21 : 6W A22 : 6W A23 : 6W A24 : 6W A25 : 6W A26 : 6W A27 : 6W
               A28 : 6W
MDB10 1        A07 :33W A08 :24W A10 :24W A11 :24W A12 :24W A13 :24W A14 :24W A15 :24W A16 :24W
               A19 :24W A20 :24W A21 :24W A22 :24W A23 :24W A24 :24W A25 :24W A26 :24W A27 :24W
               A28 :24W
MDB11 1        A07 :32W A08 :26W A10 :26W A11 :26W A12 :26W A13 :26W A14 :26W A15 :26W A16 :26W
               A19 :26W A20 :26W A21 :26W A22 :26W A23 :26W A24 :26W A25 :26W A26 :26W A27 :26W
               A28 :26W
MDB12 1        A07 :36W A08 :28W A10 :28W A11 :28W A12 :28W A13 :28W A14 :28W A15 :28W A16 :28W
               A19 :28W A20 :28W A21 :28W A22 :28W A23 :28W A24 :28W A25 :28W A26 :28W A27 :28W
               A28 :28W
MDB13 1        A07 :28W A08 :30W A10 :30W A11 :30W A12 :30W A13 :30W A14 :30W A15 :30W A16 :30W
               A19 :30W A20 :30W A21 :30W A22 :30W A23 :30W A24 :30W A25 :30W A26 :30W A27 :30W
               A28 :30W
MDB14 1        A07 :31W A08 :32W A10 :32W A11 :32W A12 :32W A13 :32W A14 :32W A15 :32W A16 :32W
               A19 :32W A20 :32W A21 :32W A22 :32W A23 :32W A24 :32W A25 :32W A26 :32W A27 :32W
               A28 :32W
MDB15 1        A07 :35W A08 :34W A10 :34W A11 :34W A12 :34W A13 :34W A14 :34W A15 :34W A16 :34W
               A19 :34W A20 :34W A21 :34W A22 :34W A23 :34W A24 :34W A25 :34W A26 :34W A27 :34W
               A28 :34W
MDB2 1         A06 :33W A08 : 8W A10 : 8W A11 : 8W A12 : 8W A13 : 8W A14 : 8W A15 : 8W A16 : 8W
               A19 : 8W A20 : 8W A21 : 8W A22 : 8W A23 : 8W A24 : 8W A25 : 8W A26 : 8W A27 : 8W
               A28 : 8W
MDB3 1         A06 :32W A08 :10W A10 :10W A11 :10W A12 :10W A13 :10W A14 :10W A15 :10W A16 :10W
               A19 :10W A20 :10W A21 :10W A22 :10W A23 :10W A24 :10W A25 :10W A26 :10W A27 :10W
```

```
                A28 :10W
MDB4 1          A06 :36W A08 :12W A10 :12W A11 :12W A12 :12W A13 :12W A14 :12W A15 :12W A16 :12W
                A19 :12W A20 :12W A21 :12W A22 :12W A23 :12W A24 :12W A25 :12W A26 :12W A27 :12W
                A28 :12W
MDB5 1          A06 :28W A08 :14W A10 :14W A11 :14W A12 :14W A13 :14W A14 :14W A15 :14W A16 :14W
                A19 :14W A20 :14W A21 :14W A22 :14W A23 :14W A24 :14W A25 :14W A26 :14W A27 :14W
                A28 :14W
MDB6 1          A06 :31W A08 :16W A10 :16W A11 :16W A12 :16W A13 :16W A14 :16W A15 :16W A16 :16W
                A19 :16W A20 :16W A21 :16W A22 :16W A23 :16W A24 :16W A25 :16W A26 :16W A27 :16W
                A28 :16W
MDB7 1          A06 :35W A08 :18W A10 :18W A11 :18W A12 :18W A13 :18W A14 :18W A15 :18W A16 :18W
                A19 :18W A20 :18W A21 :18W A22 :18W A23 :18W A24 :18W A25 :18W A26 :18W A27 :18W
                A28 :18W
MDB8 1          A07 :51W A08 :20W A10 :20W A11 :20W A12 :20W A13 :20W A14 :20W A15 :20W A16 :20W
                A19 :20W A20 :20W A21 :20W A22 :20W A23 :20W A24 :20W A25 :20W A26 :20W A27 :20W
                A28 :20W
MDB9 1          A07 :40W A08 :22W A10 :22W A11 :22W A12 :22W A13 :22W A14 :22W A15 :22W A16 :22W
                A19 :22W A20 :22W A21 :22W A22 :22W A23 :22W A24 :22W A25 :22W A26 :22W A27 :22W
                A28 :22W
MOF 1           A02 :12  A03 :11G
MONMD 1         A02 :45G A03 :28  A04 :28  A05 :10
MPRV 0          A05 :15G A07 :48
MPX0 0          A03 :20G A06 :15  A07 :15
MPX1 0          A03 : 8G A06 : 7  A07 : 7
MRF 0           A02 :24  A03 :56G
O 0             A04 :38G A06 :48
OFLH 0          A07 :27G
OFLH 1          A04 :25
OFLL 1          A06 :27G
PBLOAD 0        A01 : 5  LBUX: 3G
PBLOAD 1        A01 : 8  LBUX: 2G
PBSTART 0       A01 :51  RBUX: 2G
PBSTART 1       A01 :57  RBUX: 3G
PDRYDI 0        A01 : 7G A02 :16
PIL0 0          A03 :22G A07 :55
PIL1 0          A03 :26G A07 :57
PIL2 0          A03 :25G A07 :49
PIL3 0          A03 :24G A07 :54
PINT 0          A02 :14G A07 :46
PMRQ 0          A01 :13  A02 :57G
PROTON 0        A05 : 9  A05 :14G A07 :41
Q 0             A04 :37G A06 :46
RBSL 1          A06 :12  A07 :12
RBSL0 1         A03 :29G A06 :45  A07 :45
READ 1          A01 : 3W A08 :50W A10 :50W A11 :50W A12 :50W A13 :50W A14 :50W A15 :50W A16 :50W
                A19 :50W A20 :50W A21 :50W A22 :50W A23 :50W A24 :50W A25 :50W A26 :50W A27 :50W
                A28 :50W
RESTART 0       A02 : 7G A03 : 6  A03 :48
RMRQ 0          A01 :28W A08 :44W A10 :44W A11 :44W A12 :44W A13 :44W A14 :44W A15 :44W A16 :44W
                A19 :44W A20 :44W A21 :44W A22 :44W A23 :44W A24 :44W A25 :44W A26 :44W A27 :44W
                A28 :44W
RSL0 0          A01 :24G A06 :52  A07 :52
RSL1 0          A01 :16G A06 :53  A07 :53
RSL2 0          A01 :30G A06 :56  A07 :56
RSTR 0          A04 :31G A07 :38
RUNL 0          A05 :56G RBUX: 5
SCOSC 0         A01 :39  A02 :58G A04 :29
SCZ 1           A01 :42G A02 :11
SHIFT 0         A02 :47  A04 :26G
SH15 0          A04 :24G A07 : 6
SMPRV 0         A01 :52  A04 :54  A05 :16G
SMRQ 0          A01 :29W A08 :52W A10 :52W A11 :52W A12 :52W A13 :52W A14 :52W A15 :52W A16 :52W
```

```
                A19 :52W A20 :52W A21 :52W A22 :52W A23 :52W A24 :52W A25 :52W A26 :52W A27 :52W
                A28 :52W
SRCZ 0          A03 :10  A04 :40G
SSTS 0          A03 :51  A04 :39G A05 :13
STARTC1 0       A09 :53G A10 :53
STARTC2 0       A09 :52G A11 :53
STARTC3 0       A09 :51G A12 :53
STARTC4 0       A09 :50G A13 :53
STARTC5 0       A09 :49G A14 :53
STARTC6 0       A09 :48G A15 :53
STARTC7 0       A09 :47G A16 :53
START11 0       A18 :53G A19 :53
START12 0       A18 :52G A20 :53
START13 0       A18 :51G A21 :53
START14 0       A18 :50G A22 :53
START15 0       A18 :49G A23 :53
START16 0       A18 :48G A24 :53
START17 0       A18 :47G A25 :53
SUMZ 1          A03 :35  A06 :18W A07 :18W
TRA 0           A03 :57  A04 :35G A05 : 8
TRR 0           A04 :47G A05 :11
T1 0            A01 :15  A02 :55G
T2 0            A02 :54G A03 :50  A04 :50
T3 0            A01 :22  A02 :53G A03 :15  A04 :49  A05 : 6
T4 0            A01 :40  A02 :56G A03 :49  A04 :27  A05 :35
WRG 0           A04 :44G A06 :58  A07 :58
XCIN 0          A01 :54G A02 : 5
XOROP 0         A03 :16G A06 : 4  A07 : 4
XSTART 0        A01 :58G A02 :17
Z 0             A04 :42G A06 :54
ZCPBH 0         A04 :51G A07 : 8
ZCPBL 0         A04 :52G A06 : 8
ZRB 0           A03 :12G A06 :13  A07 :13
-5V             A26 :47  A27 :47  A28 :47  A30 :47. A31 :47  A32 :47                                  0
+5V             LBUX: 6  RBUX: 6                                                                      0
01BREAK 0       A10 :46  A11 :48G
02BREAK 0       A11 :46  A12 :48G
03BREAK 0       A12 :46  A13 :48G
04BREAK 0       A13 :46  A14 :48G
05BREAK 0       A14 :46  A15 :48G
06BREAK 0       A15 :46  A16 :48G
07BREAK 0       A16 :46  A19 :48G
ICONOW 0        A17 :53  A19 :55W A20 :55W A21 :55W A22 :55W A23 :55W A24 :55W A25 :55W A26 :55W
                A27 :55W A28 :55W A30 :54W A31 :54W A32 :54W
ICAT 0          A17 :55G A19 :57  A20 :57  A21 :57  A22 :57  A23 :57  A24 :57  A25 :57  A26 :57
                A27 :57  A28 :57  A30 :55  A31 :55  A32 :55
IIODRY 0        A17 :51  A18 : 8W A19 :43W A20 :43W A21 :43W A22 :43W A23 :43W A24 :43W A25 :43W
                A26 :43W A27 :43  A28 :43W A30 :43  A31 :43  A32 :43
IIOTD0 1        A17 : 3W A18 :45  A19 : 3W A20 : 3W A21 : 3W A22 : 3W A23 : 3W A24 : 3W A25 : 3W
                A26 : 3W A27 : 3W A28 : 3W A30 : 3  A31 : 3  A32 : 3
IIOTD1 1        A17 : 5W A18 :33  A19 : 5W A20 : 5W A21 : 5W A22 : 5W A23 : 5W A24 : 5W A25 : 5W
                A26 : 5W A27 : 5W A28 : 5W A30 : 5  A31 : 5  A32 : 5
IIOTD10 1       A17 :23W A19 :23W A20 :23W A21 :23W A22 :23W A23 :23W A24 :23W A25 :23W A26 :23W
                A27 :23W A28 :23W A30 :23  A31 :23  A32 :23
IIOTD11 1       A17 :25W A19 :25W A20 :25W A21 :25W A22 :25W A23 :25W A24 :25W A25 :25W A26 :25W
                A27 :25W A28 :25W A30 :25  A31 :25  A32 :25
IIOTD12 1       A17 :27W A19 :27W A20 :27W A21 :27W A22 :27W A23 :27W A24 :27W A25 :27W A26 :27W
                A27 :27W A28 :27W A30 :27  A31 :27  A32 :27
IIOTD13 1       A17 :29W A19 :29W A20 :29W A21 :29W A22 :29W A23 :29W A24 :29W A25 :29W A26 :29W
                A27 :29W A28 :29W A30 :29  A31 :29  A32 :29
IIOTD14 1       A17 :31W A19 :31W A20 :31W A21 :31W A22 :31W A23 :31W A24 :31W A25 :31W A26 :31W
                A27 :31W A28 :31W A30 :31  A31 :31  A32 :31
T4CL 0          A02 :34G A03 :27
```

```
1IOTD15 1       A17 :33W A19 :33W A20 :33W A21 :33W A22 :33W A23 :33W A24 :33W A25 :33W A26 :33W
                A27 :33W A28 :33W A30 :33  A31 :33  A32 :33
1IOTD2 1        A17 : 7W A18 :34  A19 : 7W A20 : 7W A21 : 7W A22 : 7W A23 : 7W A24 : 7W A25 : 7W
                A26 : 7W A27 : 7W A28 : 7W A30 : 7  A31 : 7  A32 : 7
1IOTD3 1        A17 : 9W A18 :43  A19 : 9W A20 : 9W A21 : 9W A22 : 9W A23 : 9W A24 : 9W A25 : 9W
                A26 : 9W A27 : 9W A28 : 9W A30 : 9  A31 : 9  A32 : 9
1IOTD4 1        A17 :11W A18 :44  A19 :11W A20 :11W A21 :11W A22 :11W A23 :11W A24 :11W A25 :11W
                A26 :11W A27 :11W A28 :11W A30 :11  A31 :11  A32 :11
1IOTD5 1        A17 :13W A19 :13W A20 :13W A21 :13W A22 :13W A23 :13W A24 :13W A25 :13W A26 :13W
                A27 :13W A28 :13W A30 :13  A31 :13  A32 :13
1IOTD6 1        A17 :15W A19 :15W A20 :15W A21 :15W A22 :15W A23 :15W A24 :15W A25 :15W A26 :15W
                A27 :15W A28 :15W A30 :15  A31 :15  A32 :15
1IOTD7 1        A17 :17W A19 :17W A20 :17W A21 :17W A22 :17W A23 :17W A24 :17W A25 :17W A26 :17W
                A27 :17W A28 :17W A30 :17  A31 :17  A32 :17
1IOTD8 1        A17 :19W A19 :19W A20 :19W A21 :19W A22 :19W A23 :19W A24 :19W A25 :19W A26 :19W
                A27 :19W A28 :19W A30 :19  A31 :19  A32 :19
1IOTD9 1        A17 :21W A19 :21W A20 :21W A21 :21W A22 :21W A23 :21W A24 :21W A25 :21W A26 :21W
                A27 :21W A28 :21W A30 :21  A31 :21  A32 :21
1IOTE 0         A26 :53  A29 :47G A30 :48
1JR0 1          A17 :35G A19 :35  A20 :35  A21 :35  A22 :35  A23 :35  A24 :35  A25 :35  A26 :35
                A27 :35  A28 :35  A30 :35  A31 :35  A32 :35
1JR1 1          A17 :36G A18 :58  A19 :36  A20 :36  A21 :36  A22 :36  A23 :36  A24 :36  A25 :36
                A26 :36  A27 :36  A28 :36  A30 :36  A31 :36  A32 :36
1JR2 1          A17 :37G A18 :54  A19 :37  A20 :37  A21 :37  A22 :37  A23 :37  A24 :37  A25 :37
                A26 :37  A27 :37  A28 :37  A30 :37  A31 :37  A32 :37
1JR3 1          A17 :38G A18 :57  A19 :38  A20 :38  A21 :38  A22 :38  A23 :38  A24 :38  A25 :38
                A26 :38  A27 :38  A28 :38  A30 :38  A31 :38  A32 :38
1JR4 1          A17 :39G A18 :55  A19 :39  A20 :39  A21 :39  A22 :39  A23 :39  A24 :39  A25 :39
                A26 :39  A27 :39  A28 :39  A30 :39  A31 :39  A32 :39
1JR5 1          A17 :40G A19 :40  A20 :40  A21 :40  A22 :40  A23 :40  A24 :40  A25 :40  A26 :40
                A27 :40  A28 :40  A30 :40  A31 :40  A32 :40
1JR6 1          A17 :41G A19 :41  A20 :41  A21 :41  A22 :41  A23 :41  A24 :41  A25 :41  A26 :41
                A27 :41  A28 :41  A29 :41  A30 :41  A31 :41  A32 :41
1JR7 1          A17 :42G A19 :42  A20 :42  A21 :42  A22 :42  A23 :42  A24 :42  A25 :42  A26 :42
                A27 :42  A28 :42  A29 :42  A30 :42  A31 :42  A32 :42
1MCL 0          A17 :57G A18 :46  A19 :58  A20 :58  A21 :58  A22 :58  A23 :58  A24 :58  A25 :58
                A26 :58  A27 :58  A28 :58  A30 :58  A31 :58  A32 :58
11BREAK 0       A19 :46  A20 :48G
12BREAK 0       A20 :46  A21 :48G
13BREAK 0       A21 :46  A22 :48G
14BREAK 0       A22 :46  A23 :48G
15BREAK 0       A23 :46  A24 :48G
16BREAK 0       A24 :46  A25 :48G
17BREAK 0       A25 :46  A26 :48G
2IOTE 0         A27 :53  A29 :48G A31 :48
3IOTE 0         A28 :53  A29 :49G A32 :48
37BREAK 0       A26 :46  A27 :48G
57BREAK 0       A27 :46  A28 :48G
77BREAK 0       A28 :46
```