ND—100

LOGIC DIAGRAMS

Including the most frequently used

NORD-10 I/O interfaces.

Look behing 3009 diagram.

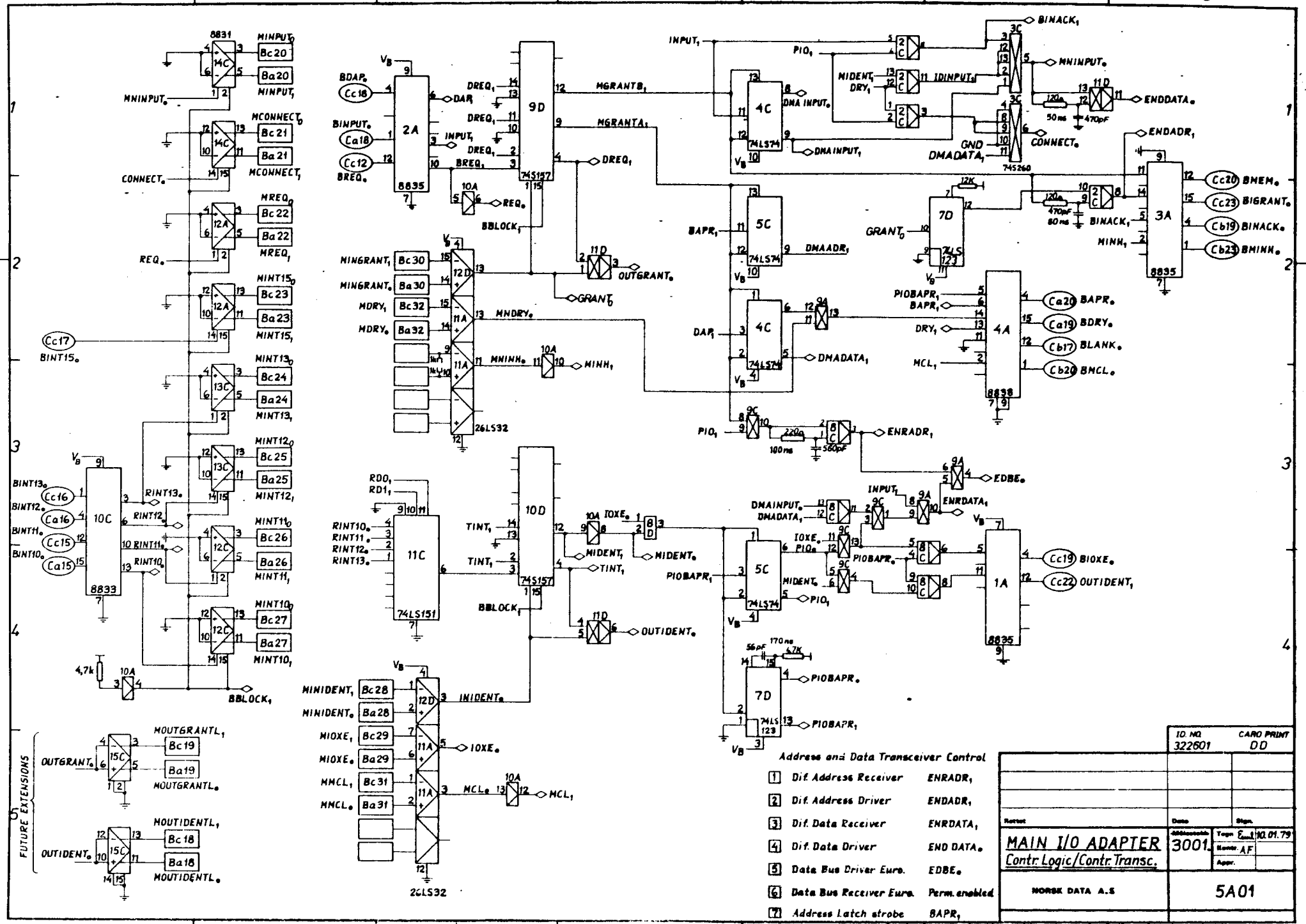
Address and Data Transceiver Control
1 Dif. Address Receiver ENRADR1
2 Dif. Address Driver ENDADR1
3 Dif. Data Receiver ENRDATA1
4 Dif. Data Driver END DATA0
5 Data Bus Driver Euro. EDBE0
6 Data Bus Receiver Euro. Perm. enabled
7 Address Latch strobe BAPR1
ID. NO. 322601
CARD PRINT DD
MAIN I/O ADAPTER
Contr. Logic/Contr. Transc.
3001
10.01.79
AF
NORSK DATA A.S
5A01
FUTURE EXTENSIONS

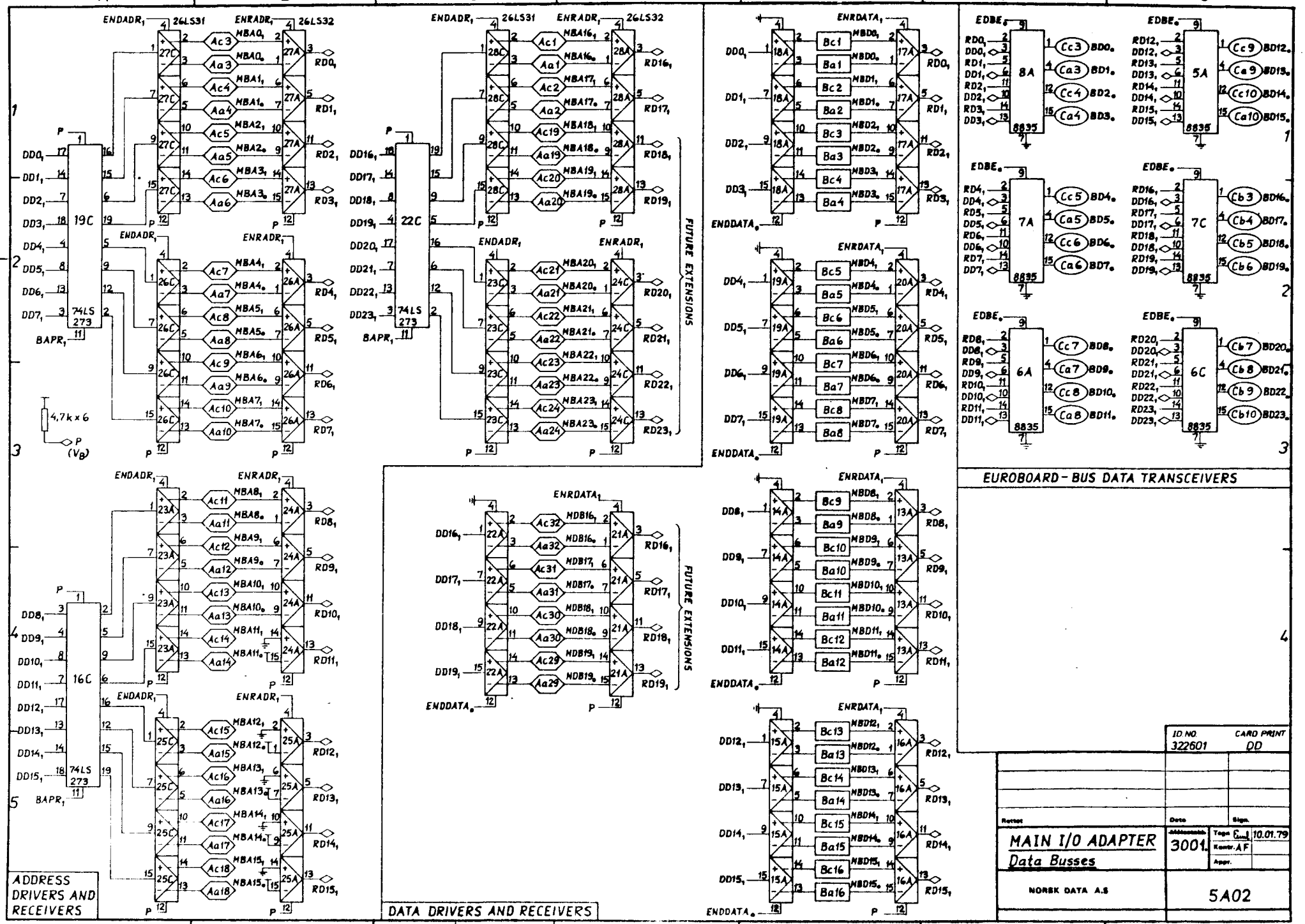
ADDRESS DRIVERS AND RECEIVERS
DATA DRIVERS AND RECEIVERS
EUROBOARD - BUS DATA TRANSCEIVERS
FUTURE EXTENSIONS
19C
22C
16C
74LS 273
26LS31
26LS32
8A
5A
7A
7C
6A
6C
8835
ENDADR
ENRADR
ENRDATA
ENDDATA
BAPR
4,7k x 6
(VB)
ID NO. 322601
CARD PRINT DD
MAIN I/O ADAPTER
Data Busses
3001
NORSK DATA A.S
5A02
10.01.79

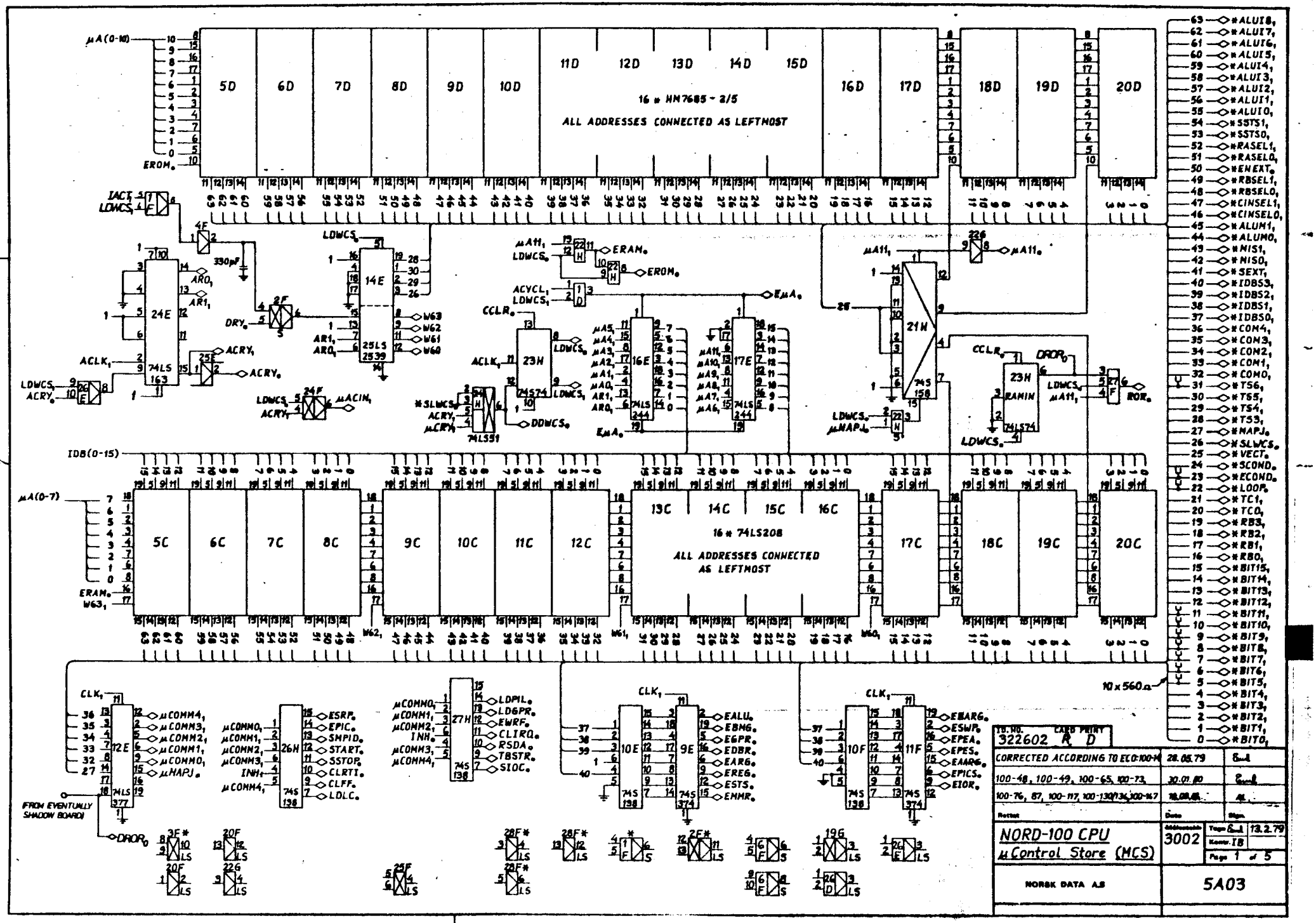
16 * HM7685 - 2/5
ALL ADDRESSES CONNECTED AS LEFTMOST
16 * 74LS208
ALL ADDRESSES CONNECTED AS LEFTMOST
IDB(0-15)
FROM EVENTUALLY SHADOW BOARD
10 x 560Ω
322602 R D
CORRECTED ACCORDING TO ECO:100-14 28.05.79
100-48, 100-49, 100-65, 100-73, 30.01.80
100-76, 87, 100-117, 100-130/134, 100-147
NORD-100 CPU
μ Control Store (MCS)
3002
13.2.79
Page 1 of 5
NORSK DATA A.S
5A03

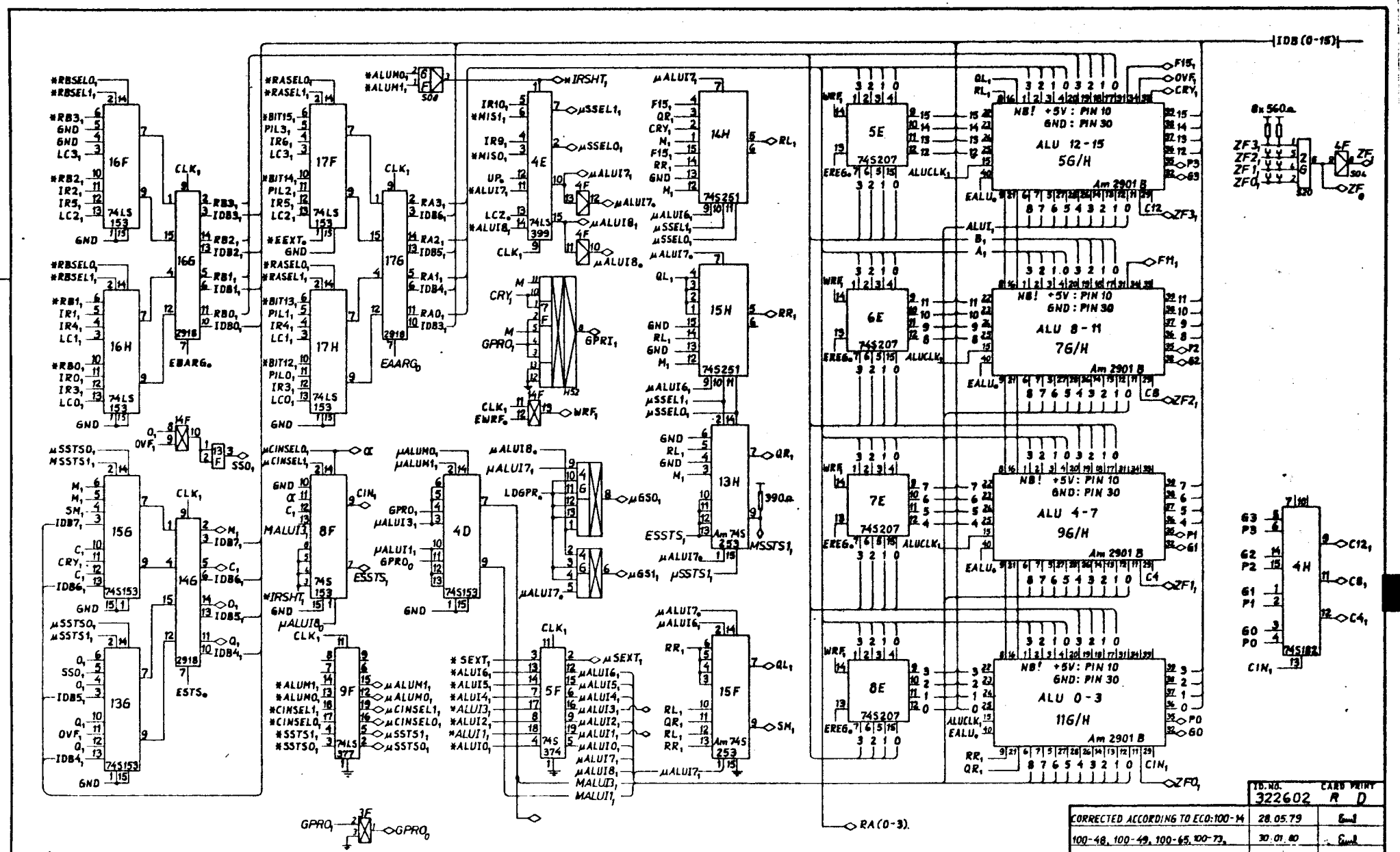
IDB (0-15)
ALU 12-15
5G/H
ALU 8-11
7G/H
ALU 4-7
9G/H
ALU 0-3
11G/H
Am 2901 B
NB! +5V : PIN 10
GND : PIN 30
RA (0-3)
16F
16H
17F
17H
4E
14H
15H
13H
15F
5E
6E
7E
8E
5F
8F
9F
4D
4H
156
146
136
166
176
74LS 153
74S251
74LS 399
74S 374
74S 253
74S153
74S182
74LS 377
74S207
2918
LS51
28E
LS393
8x 560Ω
13E
226
TO. NO.
322602
CARD VARIY
R D
CORRECTED ACCORDING TO ECO:100-14
28.05.79
100-48, 100-49, 100-65, 100-73,
30.01.80
100-76, 87, 100-117, 100-130/134, 100-147
18.03.81
AL.
Rettet
Date
Sign.
NORD-100 CPU
ALU
3002
Tegn
13.2.79
Kontr.
Side 2 of 5
NORSK DATA A.S
5A04

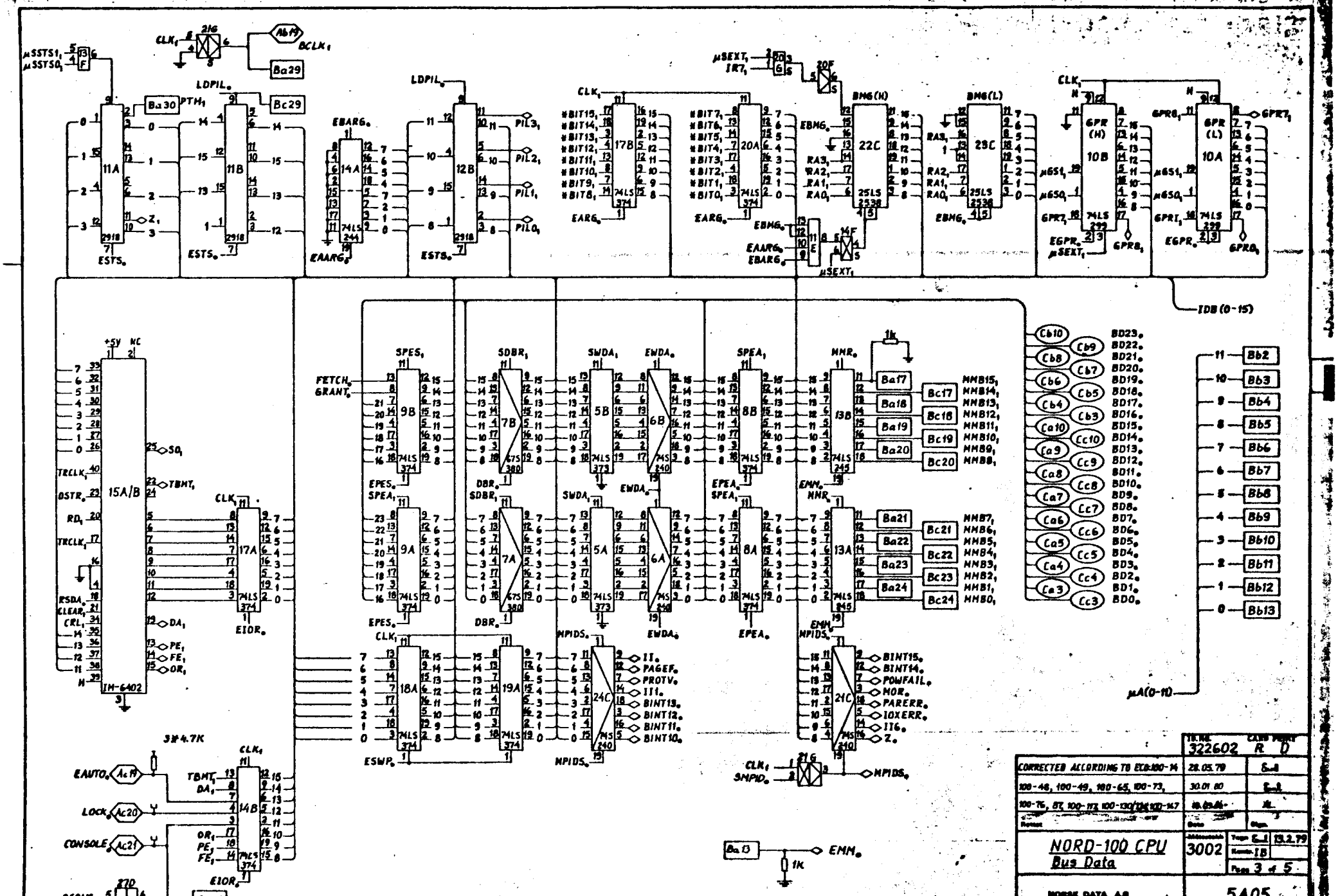
NORD-100 CPU
Bus Data
NORSK DATA A.S
3002
5A05
322602 R D
CORRECTED ACCORDING TO ECO 100-14 28.05.79
100-48, 100-49, 100-65, 100-73, 30.01.80
100-76, 87, 100-113, 100-130/134/140-147
Page 3 of 5
IDB (0-15)
μA(0-10)
EMM
BCLK
ESTS
EARG
EAARG
EBARG
EBMG
EGPR
GPR
BMG(H)
BMG(L)
SPES
SDBR
SWDA
EWDA
SPEA
MMR
EPES
DBR
ESWP
EIOR
MPIDS
SMPID
EAUTO
LOCK
CONSOLE
SCONS
TBMT
DA
OR
PE
FE
SO
DSTR
RD
TRCLK
RSDA
CLEAR
CRL
PTH
LDPIL
PIL
FETCH
GRANT
BIT
IRT
RA
μSEXT
μSSTS
μGS
CLK
BCLK
IM-6402
15A/B
11A
11B
12B
14A
14B
17A
17B
18A
19A
20A
20F
21C
22C
23C
24C
5A
5B
6A
6B
7A
7B
8A
8B
9A
9B
10A
10B
13A
13B
25LS 2538
74LS 374
74LS 244
74LS 245
74LS 240
74LS 373
74LS 380
74LS 299
2918
BINT15
BINT14
POWFAIL
MOR
PARERR
IOXERR
IT6
Z
BD23
BD22
BD21
BD20
BD19
BD18
BD17
BD16
BD15
BD14
BD13
BD12
BD11
BD10
BD9
BD8
BD7
BD6
BD5
BD4
BD3
BD2
BD1
BD0
MMB15
MMB14
MMB13
MMB12
MMB11
MMB10
MMB9
MMB8
MMB7
MMB6
MMB5
MMB4
MMB3
MMB2
MMB1
MMB0

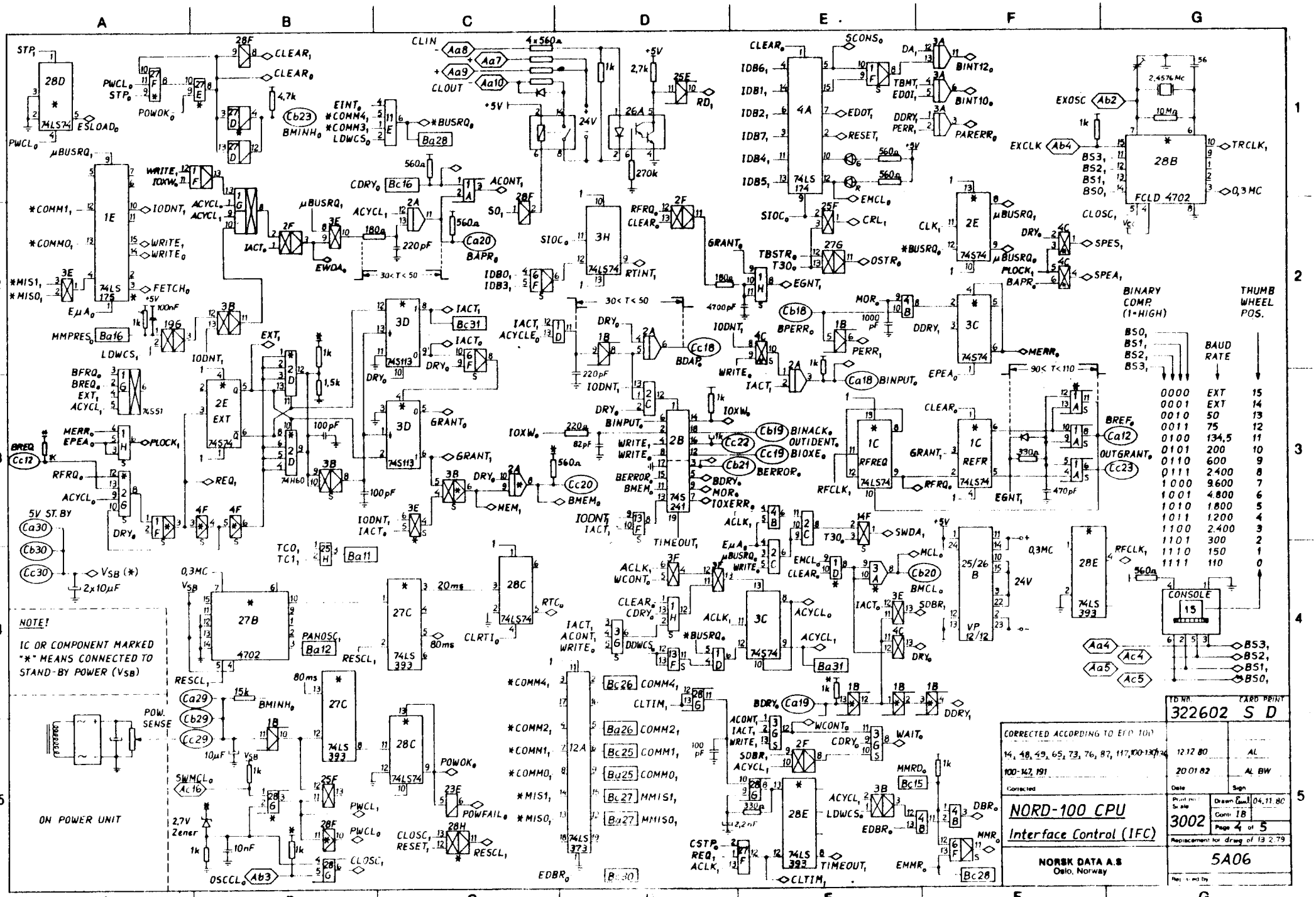
NOTE!
IC OR COMPONENT MARKED "*" MEANS CONNECTED TO STAND-BY POWER (VSB)
ON POWER UNIT
BINARY COMP. (1=HIGH)
THUMB WHEEL POS.
BAUD RATE
0000 EXT 15
0001 EXT 14
0010 50 13
0011 75 12
0100 134,5 11
0101 200 10
0110 600 9
0111 2400 8
1000 9600 7
1001 4800 6
1010 1800 5
1011 1200 4
1100 2400 3
1101 300 2
1110 150 1
1111 110 0
CONSOLE
NORD-100 CPU
Interface Control (IFC)
NORSK DATA A.S
Oslo, Norway
322602 S D
CORRECTED ACCORDING TO ECO 100
14, 48, 49, 65, 73, 76, 87, 117, 100-137, 136
100-147, 191
12.12.80 AL
20.01.82 AL BW
3002
Page 4 of 5
5A06

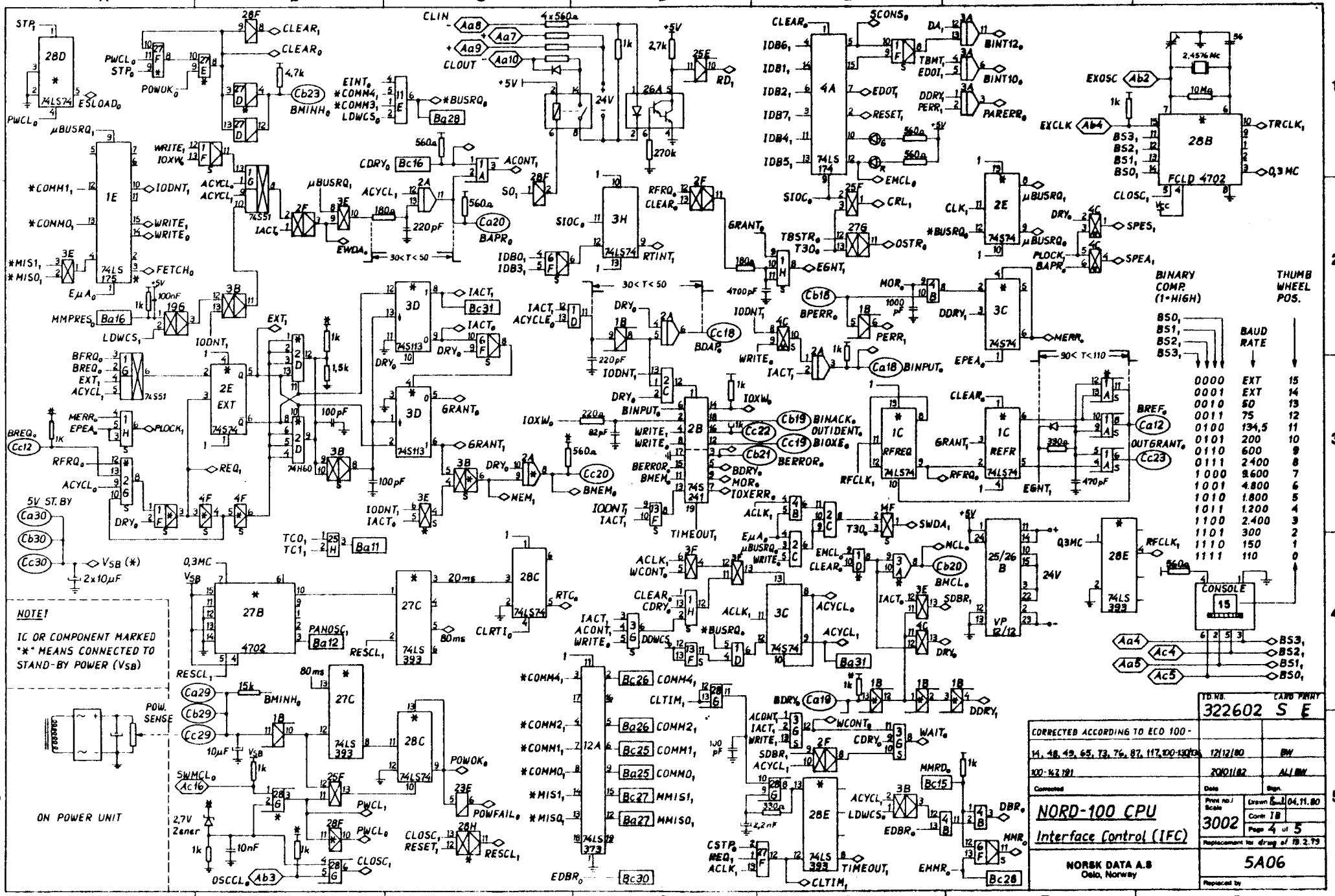
NOTE!
IC OR COMPONENT MARKED "*" MEANS CONNECTED TO STAND-BY POWER (VSB)
ON POWER UNIT
POW. SENSE
BINARY COMP. (1=HIGH)
THUMB WHEEL POS.
BAUD RATE
0000 EXT 15
0001 EXT 14
0010 50 13
0011 75 12
0100 134,5 11
0101 200 10
0110 600 9
0111 2400 8
1000 9600 7
1001 4800 6
1010 1800 5
1011 1200 4
1100 2400 3
1101 300 2
1110 150 1
1111 110 0
CONSOLE
TD.NR. 322602
CARD PRINT S E
CORRECTED ACCORDING TO ECO 100-
14, 48, 49, 65, 73, 76, 87, 117, 100-130
12/12/80 BW
100-142 191 20/01/82 ALI BW
Corrected Date Sign.
NORD-100 CPU
Interface Control (IFC)
Print no./Scale 3002
Drawn Bull 04.11.80
Contr TB
Page 4 of 5
Replacement for dwg of 19.2.79
5A06
Replaced by
NORSK DATA A.S
Oslo, Norway

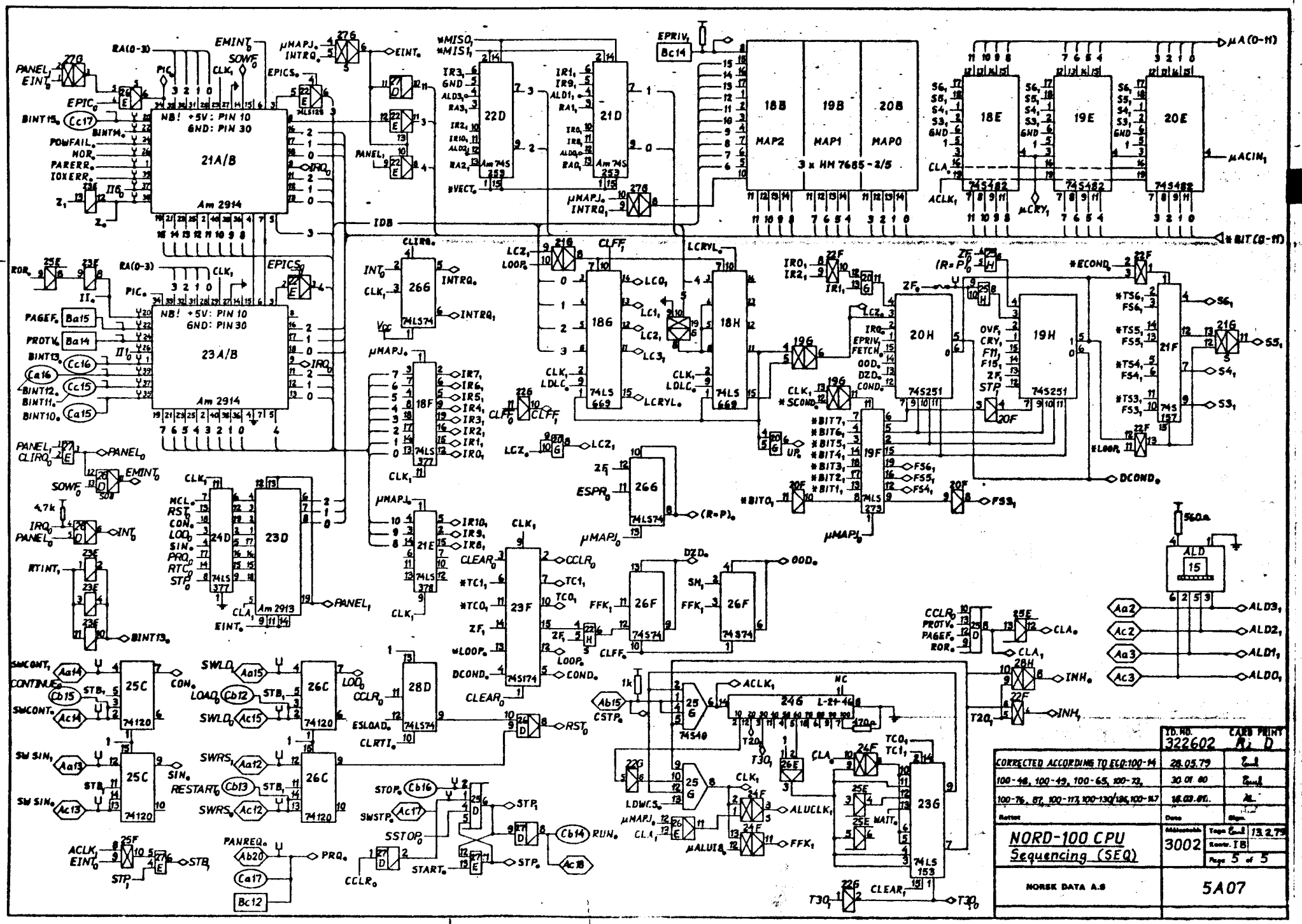
NORD-100 CPU
Sequencing (SEQ)
NORSK DATA A.S
5A07
3002
322602
CORRECTED ACCORDING TO ECO:100-14
21A/B
23A/B
Am 2914
Am 2913
74S251
74S157
74S482
74LS669
74LS374
74LS377
74LS378
74S174
74S153
74S40
74120
MAP2
MAP1
MAP0
3 x HM 7685-2/5
IDB
μA(0-11)
μACIN
μCRY
μBIT(0-11)

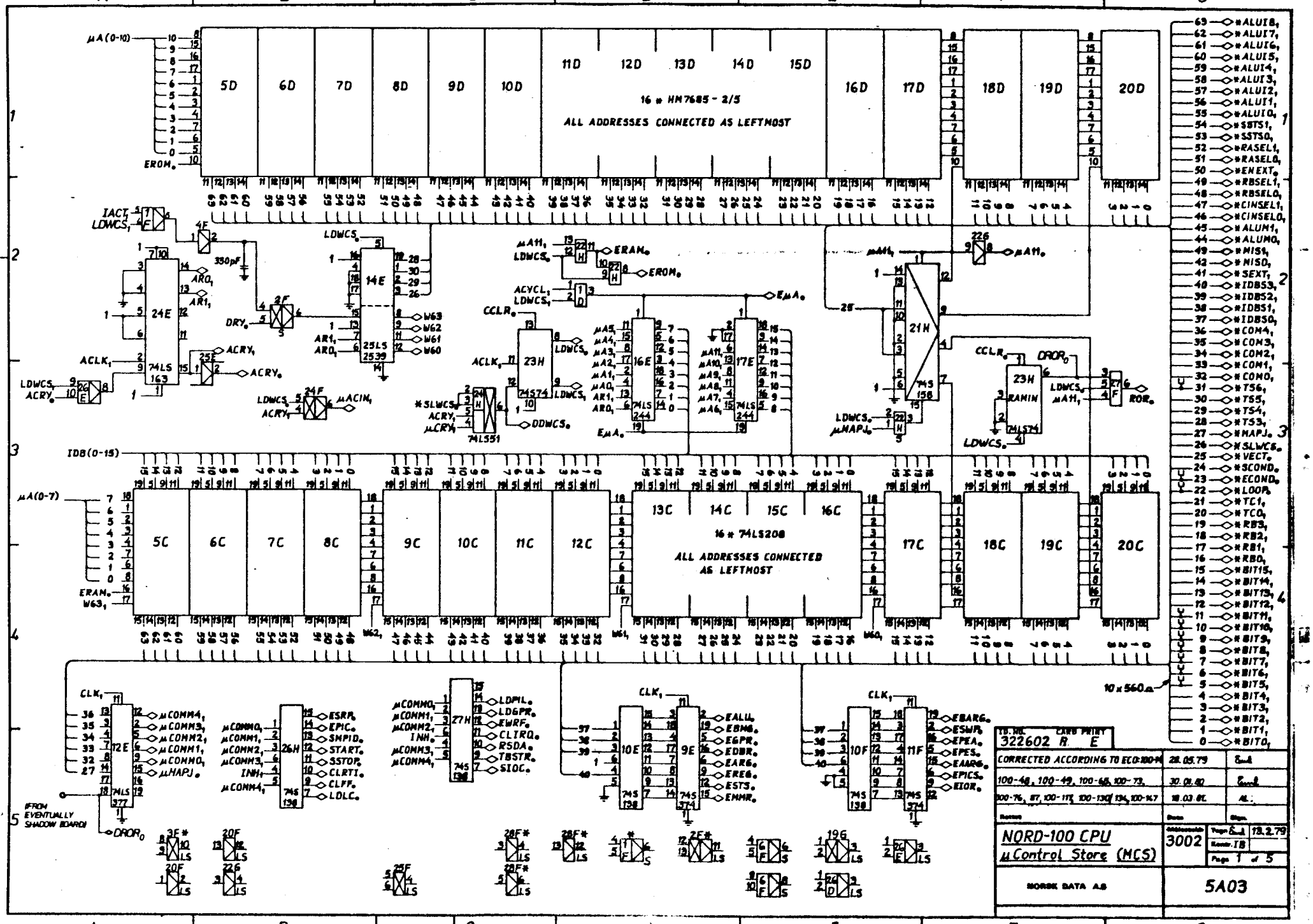
16 * HM7685 - 2/5
ALL ADDRESSES CONNECTED AS LEFTMOST
16 * 74LS208
ALL ADDRESSES CONNECTED AS LEFTMOST
IDB(0-15)
EROM
ERAM
EMA
DDWCS
LDWCS
ACLK
ACRY
ARO
AR1
DRY
CCLR
DROR
ROR
MACIN
MAPJ
VECT
SCOND
ECOND
LOOP
TC1
TC0
RB3
RB2
RB1
RB0
BIT15
BIT14
BIT13
BIT12
BIT11
BIT10
BIT9
BIT8
BIT7
BIT6
BIT5
BIT4
BIT3
BIT2
BIT1
BIT0
ALUI8
ALUI7
ALUI6
ALUI5
ALUI4
ALUI3
ALUI2
ALUI1
ALUI0
SSTS1
SSTS0
RASEL1
RASEL0
ENEXT
RBSEL1
RBSEL0
CINSEL1
CINSEL0
ALUM1
ALUM0
MIS1
MIS0
SEXT
IDBS3
IDBS2
IDBS1
IDBS0
COM4
COM3
COM2
COM1
COM0
TS6
TS5
TS4
TS3
SLWCS
ELUL
EBMG
EGPR
EDBR
EARG
EREG
ESTS
EMMR
EBARG
ESWR
EPEA
EPES
EARG
EPICS
EIOR
LDPIL
LDGPR
EWRF
CLIRQ
RSDA
TBSTR
SIOC
ESRR
EPIC
SMPID
START
SSTOP
CLRTI
CLFF
LDLC
IFROM EVENTUALLY SHADOW BOARD!
10 x 560Ω
322602 R E
CORRECTED ACCORDING TO ECO:100-44
100-48, 100-49, 100-68, 100-73,
100-76, 87, 100-113, 100-130, 134, 100-147
NORD-100 CPU
μControl Store (MCS)
3002
Page 1 of 5
NORSK DATA A.S
5A03

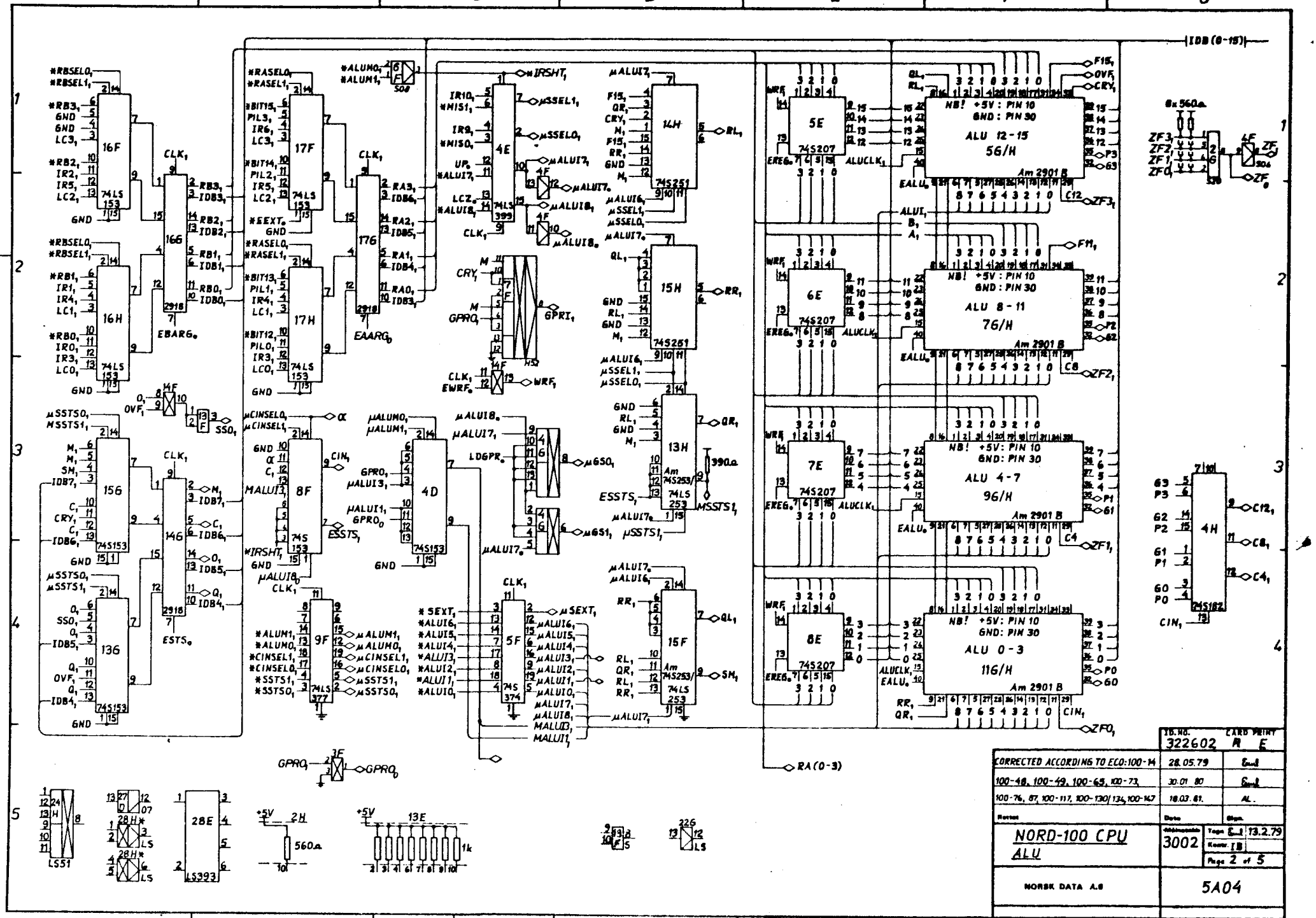

CORRECTED ACCORDING TO ECO:100-14	28.05.79	
100-48, 100-49, 100-65, 100-73,	30.01.80	
100-76, 87, 100-117, 100-130/134, 100-147	18.03.81.	AL.
Revision	Date	Sign.

NORD-100 CPU ALU	Addresses 3002	Tegn. 13.2.79
		Kontr. IB
		Page 2 of 5
NORSK DATA A.S	5A04	

TE. NO. 322602 CARD PRINT A E

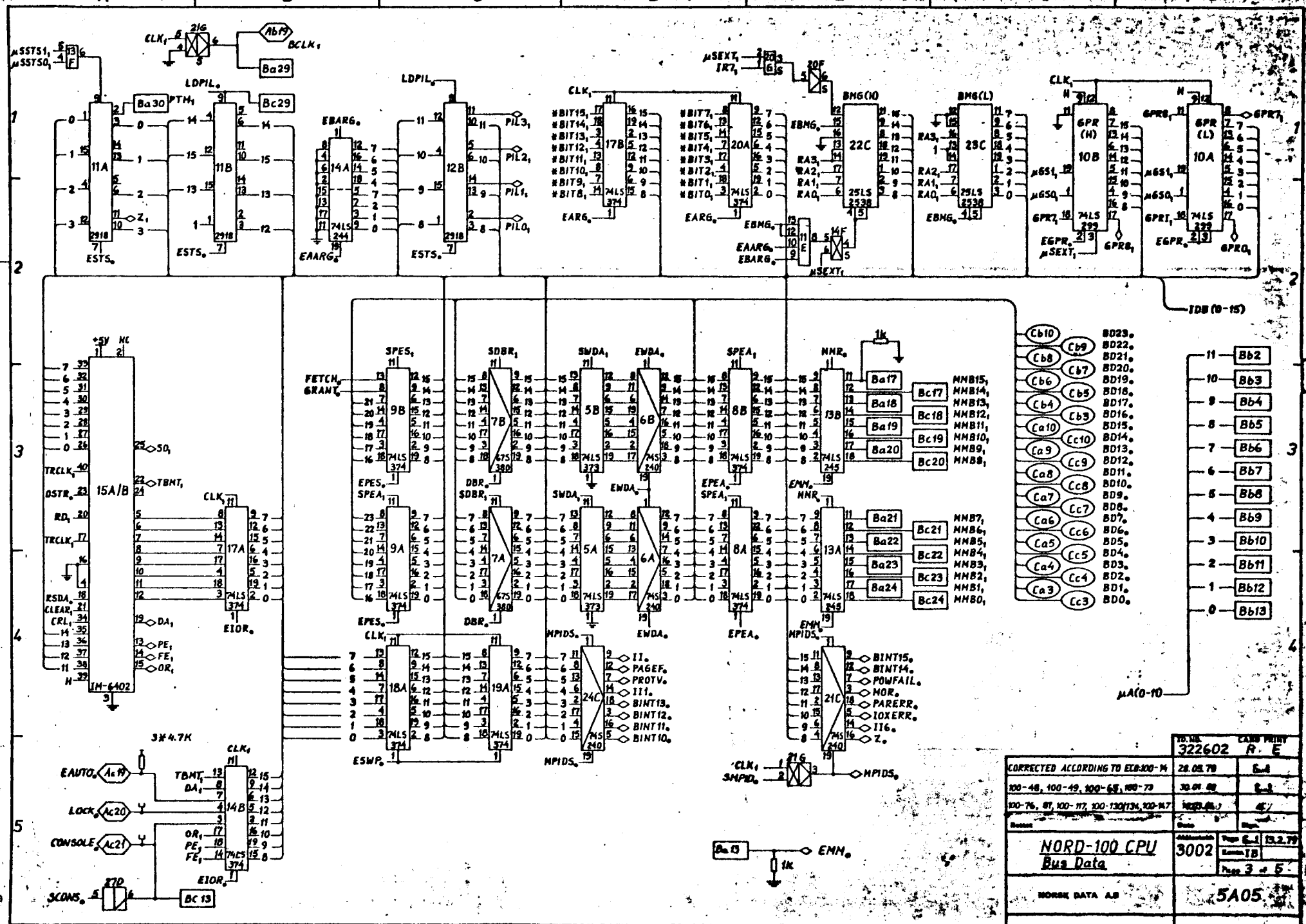
NORD-100 CPU
Bus Data
322602
R. E
3002
5A05
NORSK DATA A.S
CORRECTED ACCORDING TO ECB:100-14
28.08.78
100-48, 100-49, 100-65, 100-73
100-76, 87, 100-117, 100-130/134, 100-147
Page 3 of 5
13.2.79
11A
11B
14A
12B
17B
20A
22C
23C
10B
10A
15A/B
TM-6402
17A
9B
7B
5B
6B
8B
13B
9A
7A
5A
6A
8A
13A
18A
19A
24C
21C
14B
BMG(H)
BMG(L)
GPR (H)
GPR (L)
IDB (0-15)
μA(0-10)
EMM
MPIDS
BCLK
EAUTO
LOCK
CONSOLE
SCONS

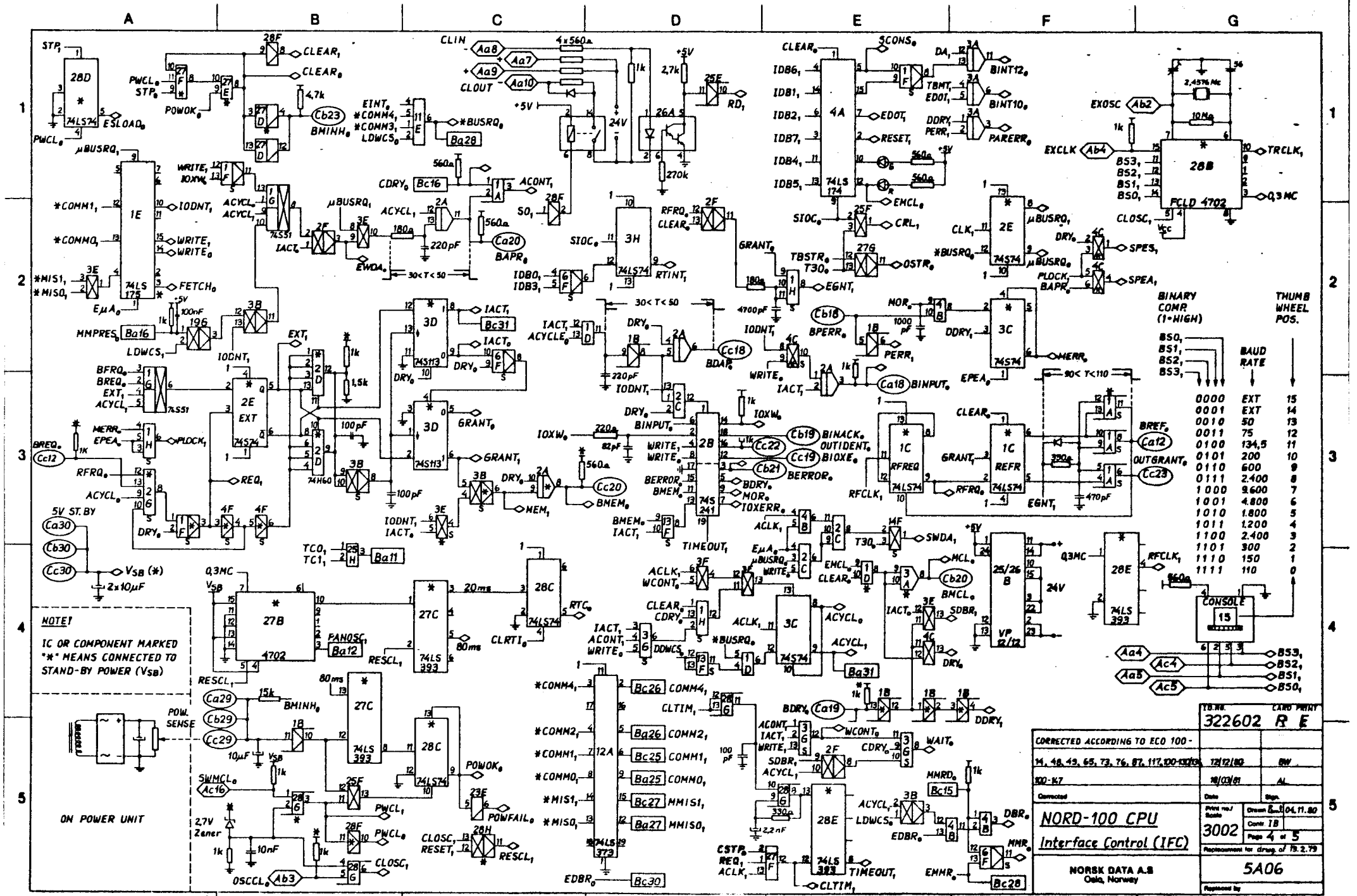
NOTE!
IC OR COMPONENT MARKED "*" MEANS CONNECTED TO STAND-BY POWER (VSB)
ON POWER UNIT
POW. SENSE
BINARY COMP. (1=HIGH)
THUMB WHEEL POS.
BAUD RATE
0000 EXT 15
0001 EXT 14
0010 50 13
0011 75 12
0100 134,5 11
0101 200 10
0110 600 9
0111 2.400 8
1000 9.600 7
1001 4.800 6
1010 1.800 5
1011 1.200 4
1100 2.400 3
1101 300 2
1110 150 1
1111 110 0
CONSOLE
TB.NR. 322602
CARD PRINT R E
CORRECTED ACCORDING TO ECO 100-
14, 46, 49, 65, 73, 76, 87, 117, 100-130
100-147
12/12/80 BW
18/03/81 AL
NORD-100 CPU
Interface Control (IFC)
3002
Page 4 of 5
NORSK DATA A.S
Oslo, Norway
5A06

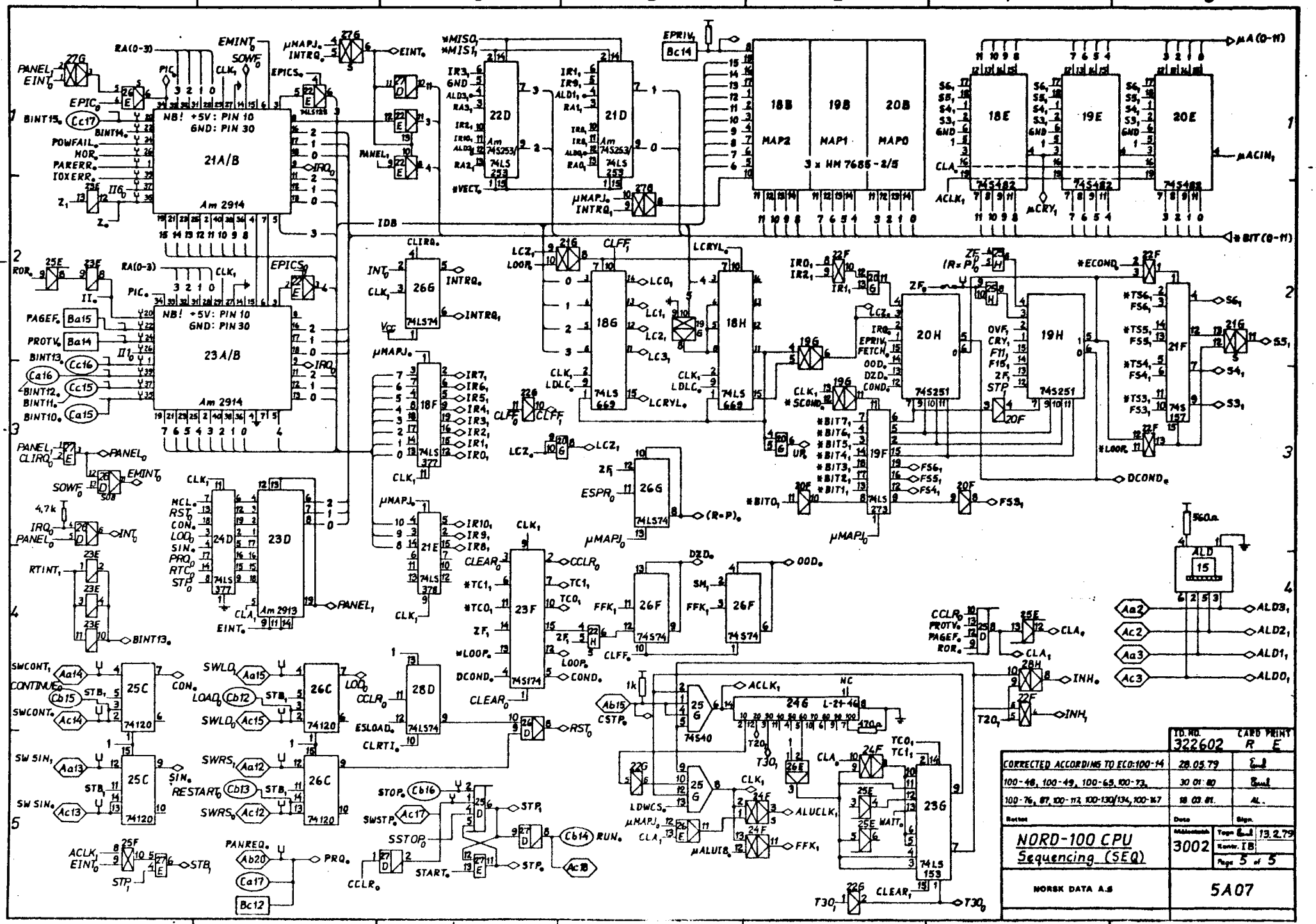
NB! +5V: PIN 10
GND: PIN 30
21A/B
Am 2914
23A/B
Am 2914
22D
21D
Am 74LS253
18B
19B
20B
MAP2
MAP1
MAP0
3 x HM 7685-2/5
18E
19E
20E
74S482
18G
18H
74LS 669
20H
19H
74S251
21F
74S 157
19F
74LS 273
26G
74LS374
18F
74LS 377
24D
23D
Am 2913
21E
74LS 378
23F
74S174
25C
74120
26C
74120
28D
74LS374
25G
74S40
23G
74LS 153
26F
74S 374
24F
ALD
15
NORD-100 CPU
Sequencing (SEQ)
NORSK DATA A.S
3002
5A07
322602
R E
CORRECTED ACCORDING TO ECO:100-14
100-48, 100-49, 100-65, 100-73,
100-76, 87, 100-112, 100-130/134, 100-167
Page 5 of 5

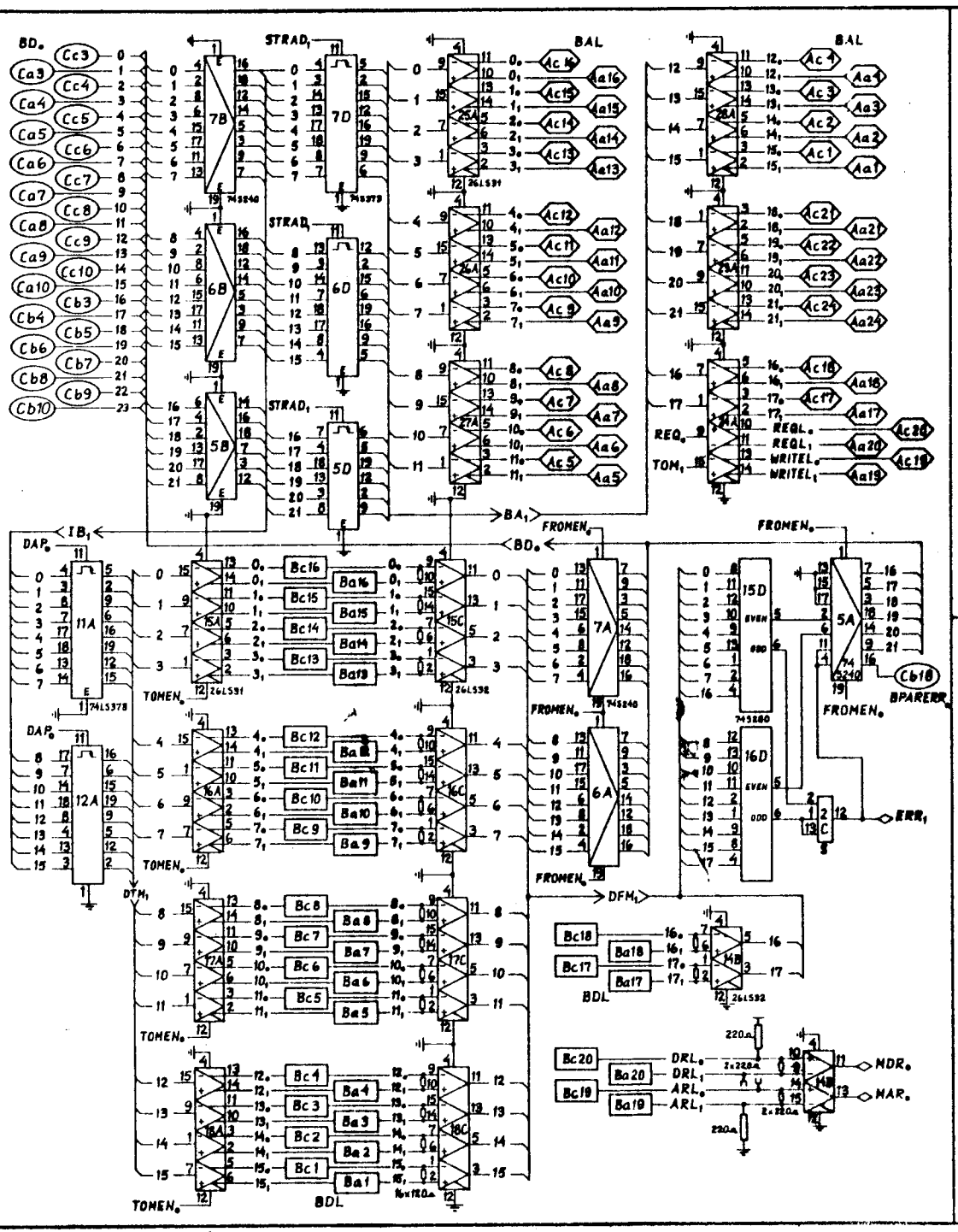

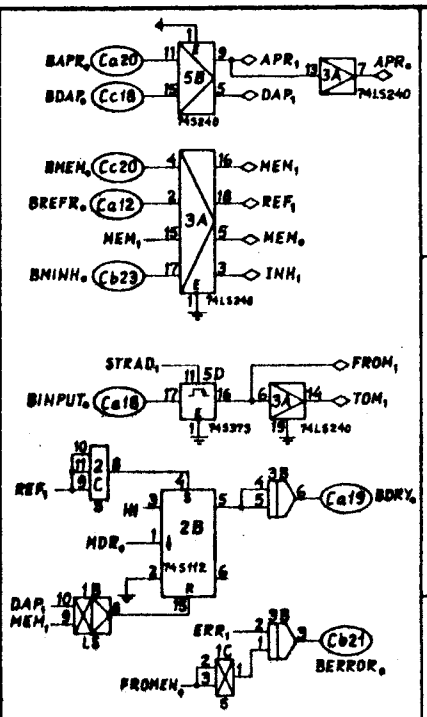

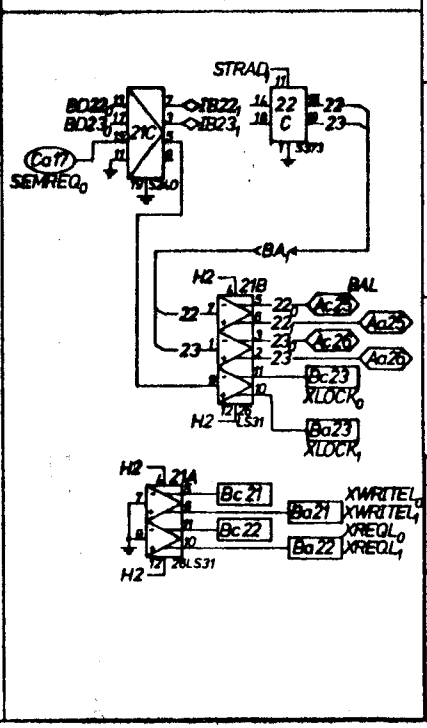

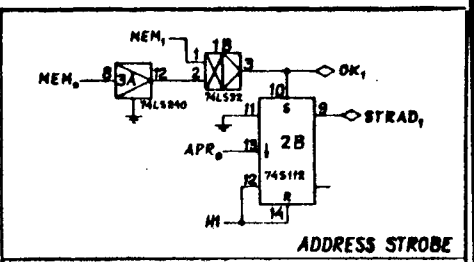

ADDRESS STROBE

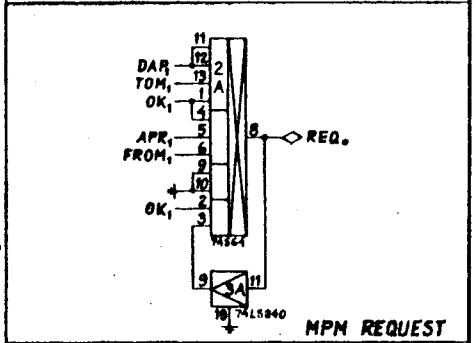

MPM REQUEST

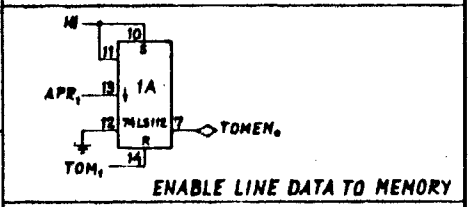

ENABLE LINE DATA TO MEMORY

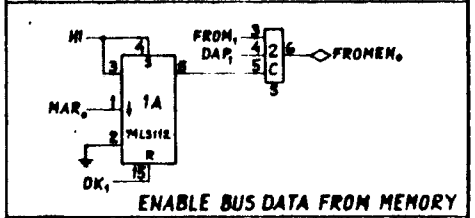

ENABLE BUS DATA FROM MEMORY

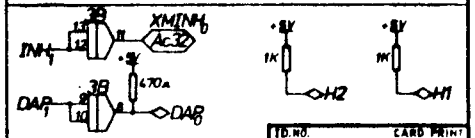

ID.NO. 322603	CARD PRINT E C	
CORR ACCORD TO ECO 100-160.203	16.02.82	BW
Rastet	Date	Sign.
MPM LINE DRIVER	Print no. 3003	Tegn. 09/05/79 Kontr. PJJ Page 1 of 1
NORSK DATA A.S	5A08	

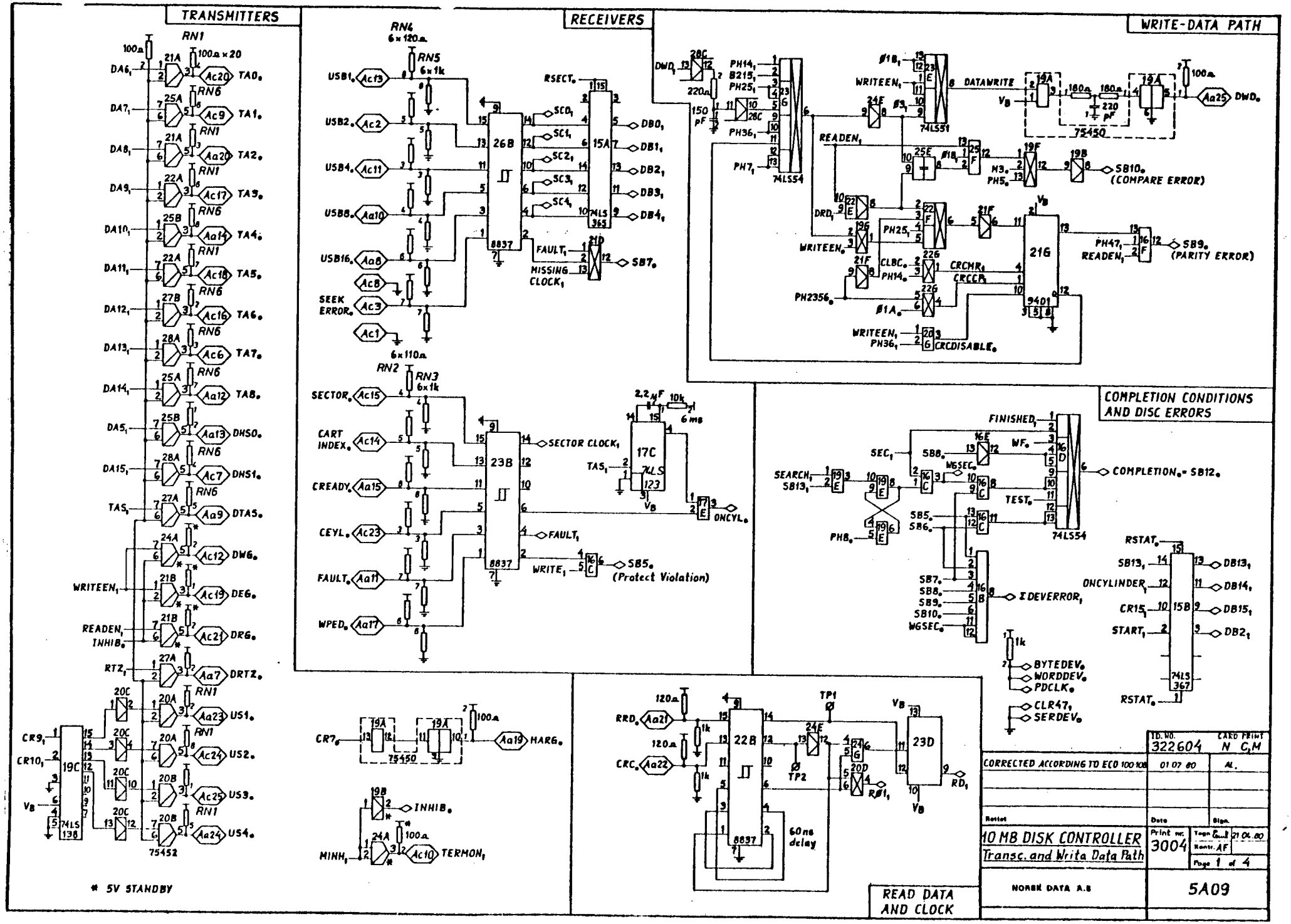
TRANSMITTERS
RECEIVERS
WRITE-DATA PATH
COMPLETION CONDITIONS AND DISC ERRORS
READ DATA AND CLOCK
* 5V STANDBY
10 MB DISK CONTROLLER
Transc. and Write Data Path
NORSK DATA A.S
5A09
322604
N C,M
CORRECTED ACCORDING TO ECO 100 108
01 07 80
3004
Page 1 of 4

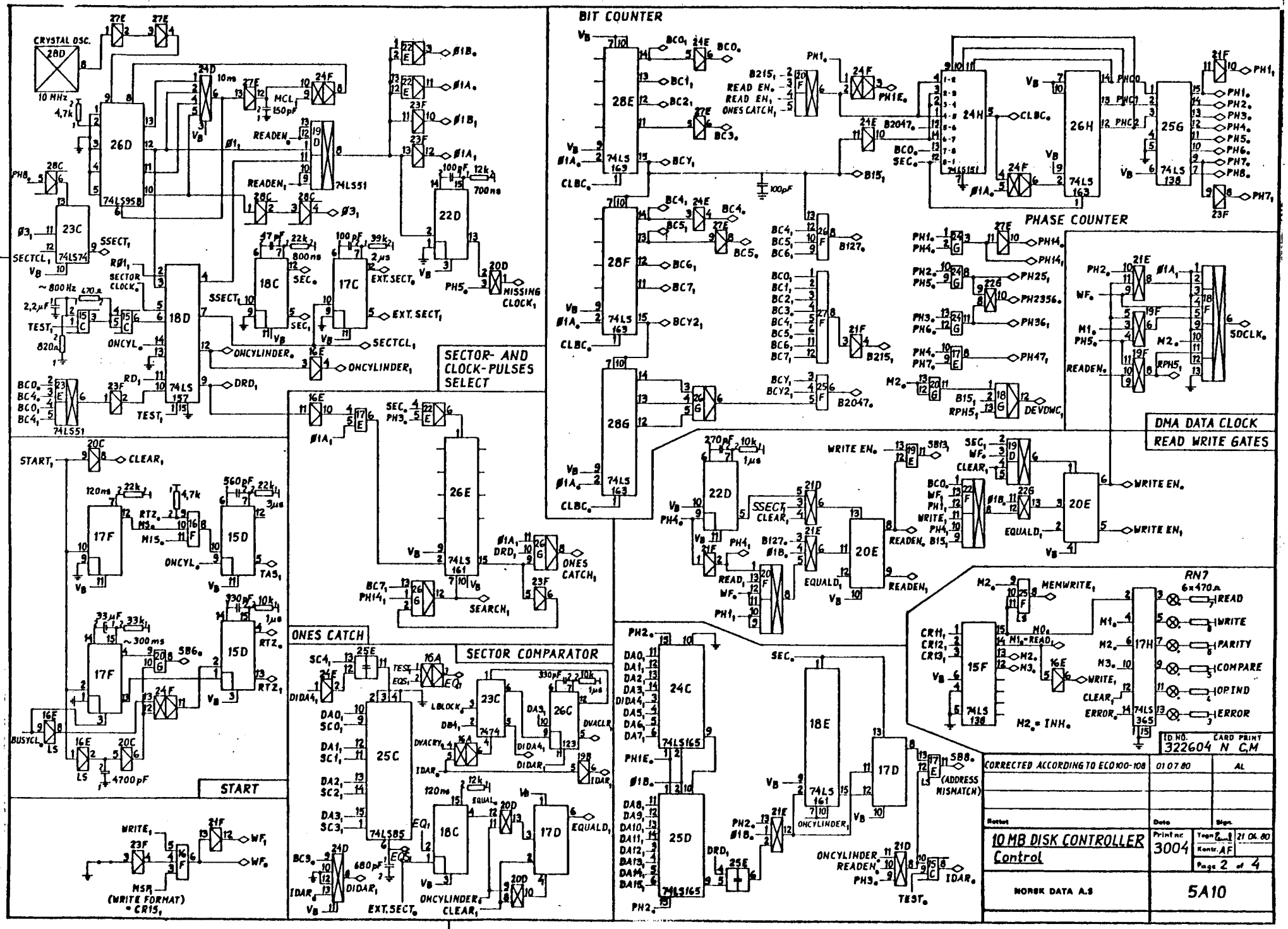
CRYSTAL OSC.
28D
10 MHz
26D
74LS95B
23C
74LS74
18D
74LS157
18C
17C
22D
MCL
150pF
READEN
READEN1
74LS551
SECTOR CLOCK
SSECT
SEC
EXT. SECT
SECTCL
ONCYLINDER
DRD
TEST
MISSING CLOCK
START
CLEAR
17F
15D
TAS
RTZ
BUSYCL
4700pF
WRITE
WF
MSR
(WRITE FORMAT) = CR15
SECTOR- AND CLOCK-PULSES SELECT
26E
74LS 161
ONES CATCH
SEARCH
ONES CATCH
SECTOR COMPARATOR
25C
74LS85
23C
26G
24C
74LS165
25D
74LS165
18C
17D
EQUALD
BIT COUNTER
28E
28F
28G
74LS 163
CLBC
B2047
B127
B215
PHASE COUNTER
24H
26H
74LS 163
256
74LS 138
PH1
PH2
PH3
PH4
PH5
PH6
PH7
PH8
PHC0
PHC2
DMA DATA CLOCK
READ WRITE GATES
21E
19F
SDCLK
RPH5
DEVDWC
WRITE EN
20E
EQUALD
SSECT
CLEAR
READEN
WRITE
PARITY
COMPARE
OPIND
ERROR
RN7
6x470Ω
15F
74LS 138
17H
74LS 365
MEMWRITE
M2 = INH
18E
74LS 161
ONCYLINDER
17D
(ADDRESS MISMATCH)
TEST
IDAR
ID.NO. 322604
CARD PRINT N C.M
CORRECTED ACCORDING TO ECO100-108
01 07 80
AL
Rettet
Dato
Sign.
10 MB DISK CONTROLLER
Control
Print nr. 3004
Tegn. 21 04 80
Kontr. AF
Page 2 of 4
NORSK DATA A.S
5A10

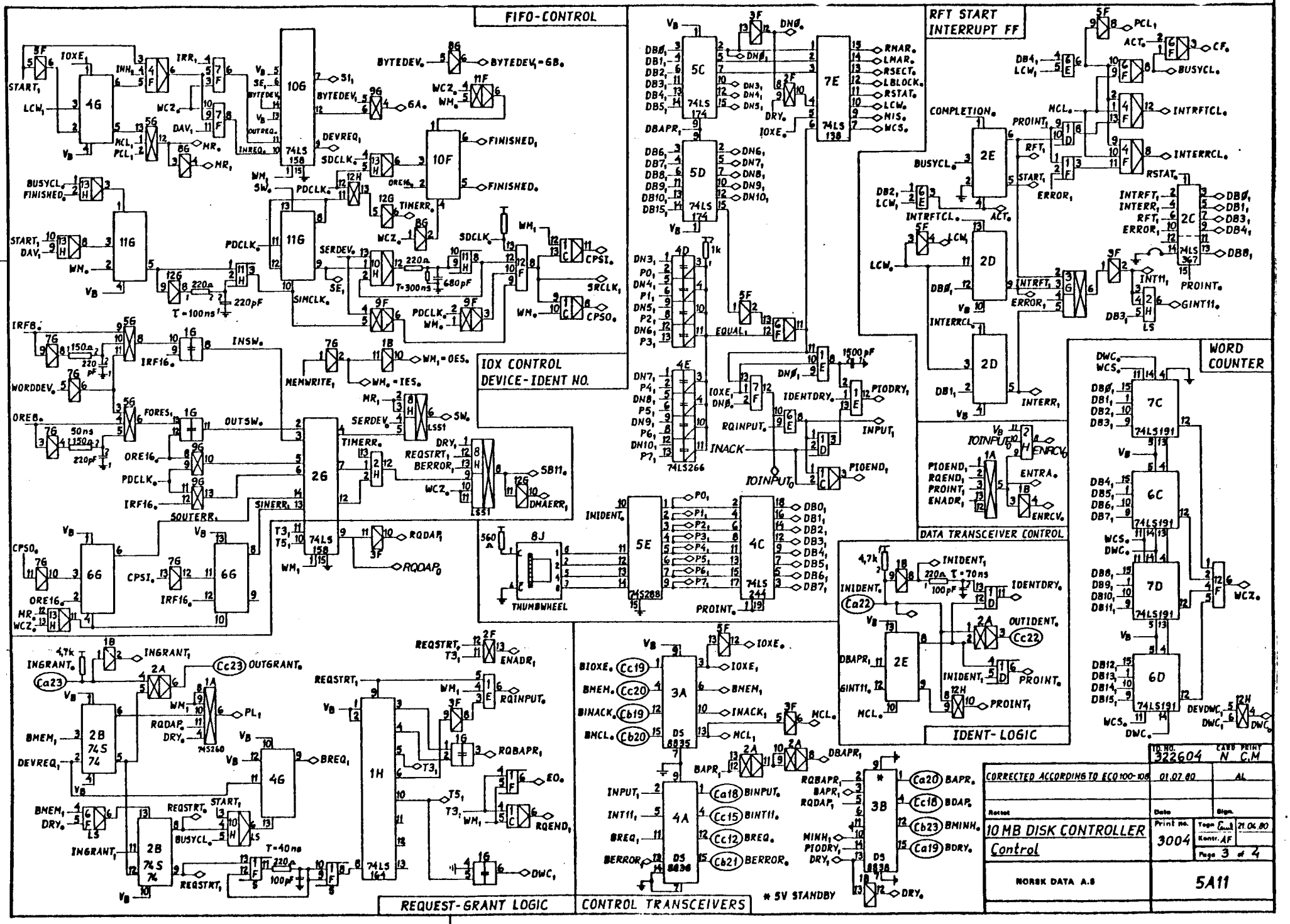
FIFO-CONTROL
RFT START INTERRUPT FF
IOX CONTROL DEVICE-IDENT NO.
WORD COUNTER
DATA TRANSCEIVER CONTROL
IDENT-LOGIC
REQUEST-GRANT LOGIC
CONTROL TRANSCEIVERS
THUMBWHEEL
* 5V STANDBY
CORRECTED ACCORDING TO ECO 100-108
10 MB DISK CONTROLLER
Control
NORSK DATA A.S
5A11
3004
Page 3 of 4

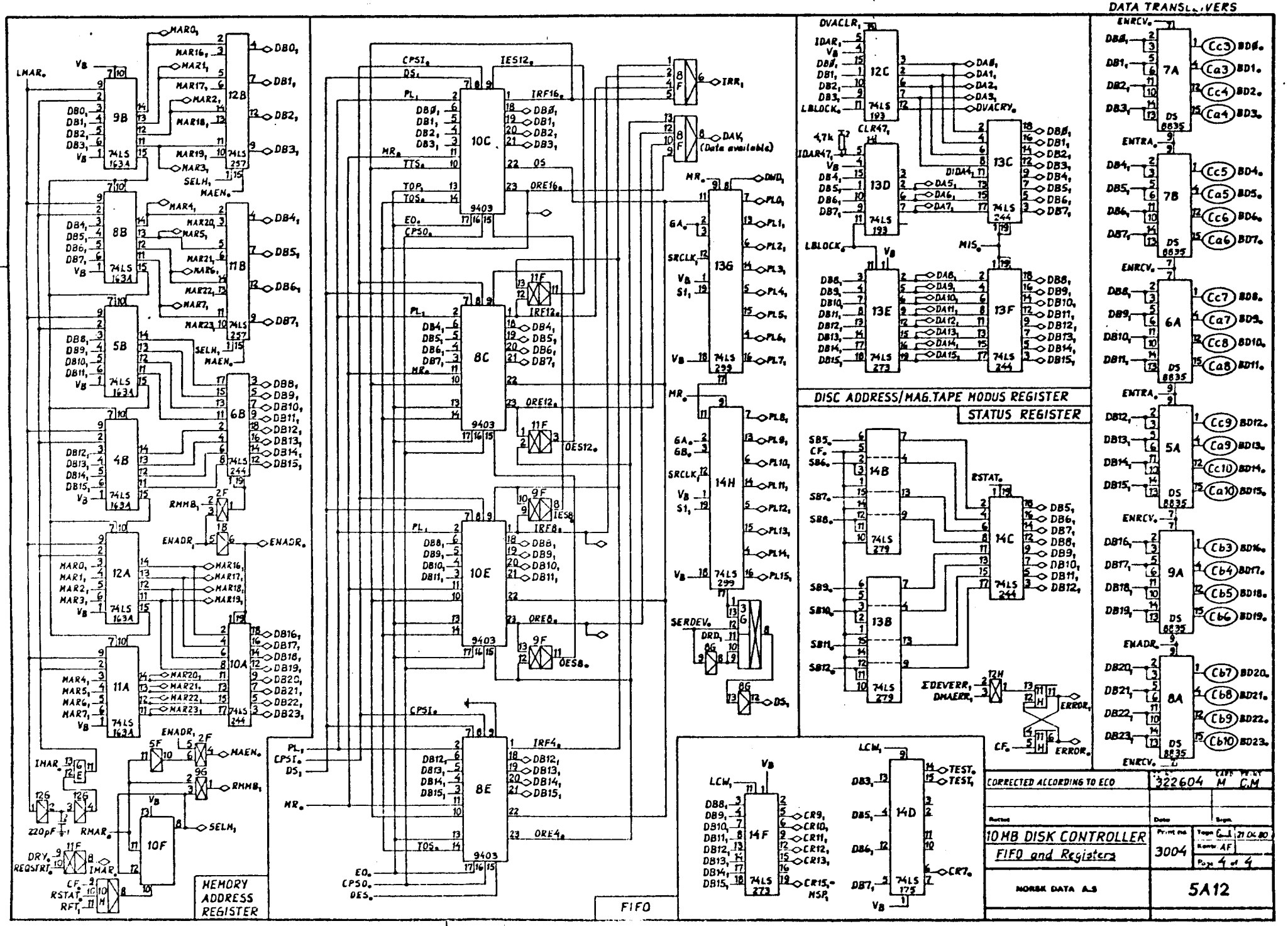
DATA TRANSLEIVERS
DISC ADDRESS/MAG.TAPE MODUS REGISTER
STATUS REGISTER
MEMORY ADDRESS REGISTER
FIFO
CORRECTED ACCORDING TO ECO
322604
10 MB DISK CONTROLLER
FIFO and Registers
3004
NORSK DATA A.S
5A12

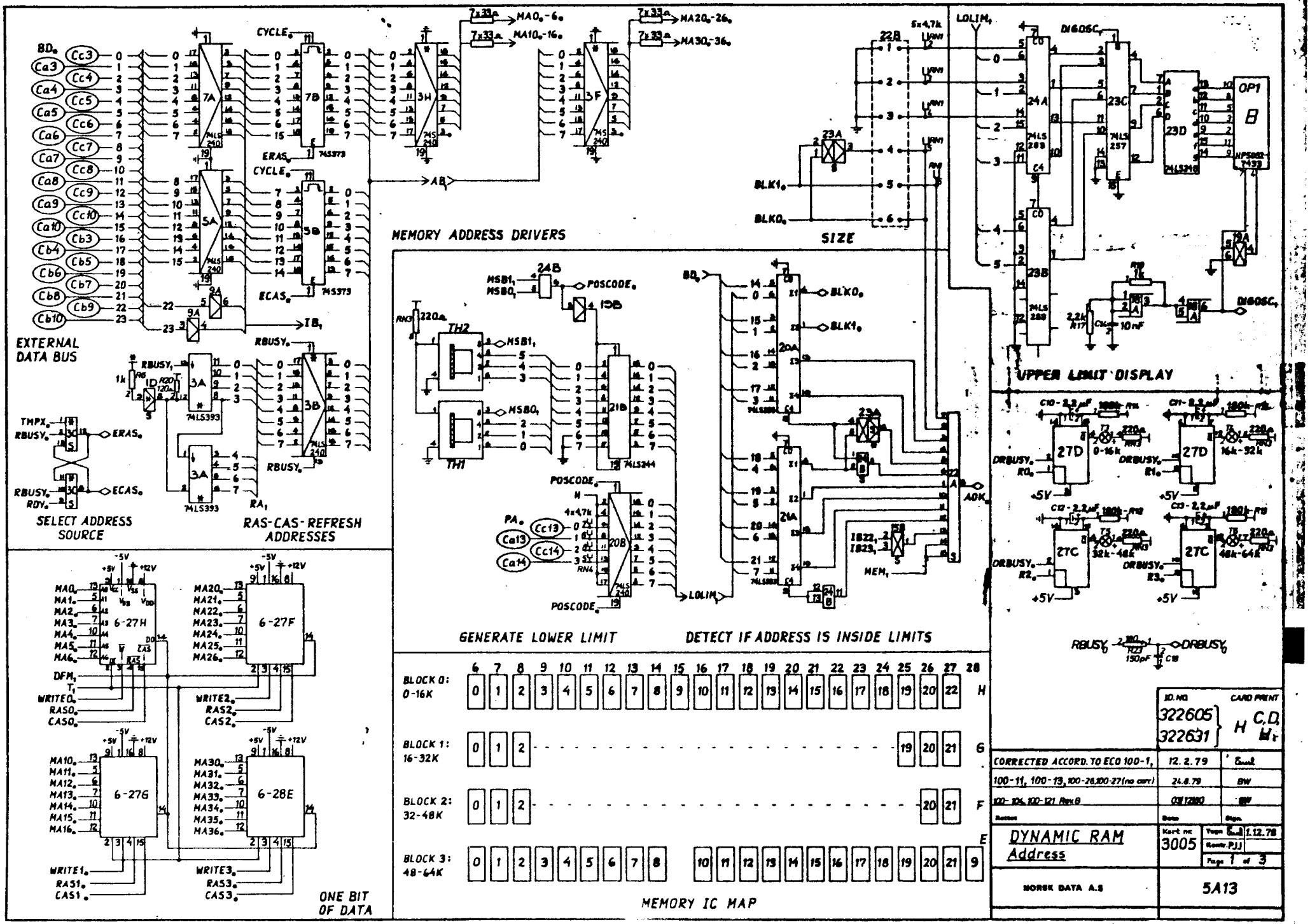
EXTERNAL DATA BUS
MEMORY ADDRESS DRIVERS
SIZE
UPPER LIMIT DISPLAY
SELECT ADDRESS SOURCE
RAS-CAS-REFRESH ADDRESSES
GENERATE LOWER LIMIT
DETECT IF ADDRESS IS INSIDE LIMITS
ONE BIT OF DATA
MEMORY IC MAP
BLOCK 0: 0-16K
BLOCK 1: 16-32K
BLOCK 2: 32-48K
BLOCK 3: 48-64K
DYNAMIC RAM Address
NORSK DATA A.S
5A13
3005
322605
322631
CORRECTED ACCORD. TO ECO 100-1,
100-11, 100-13, 100-26, 100-27 (no corr)
100-106, 100-121 Rev. B

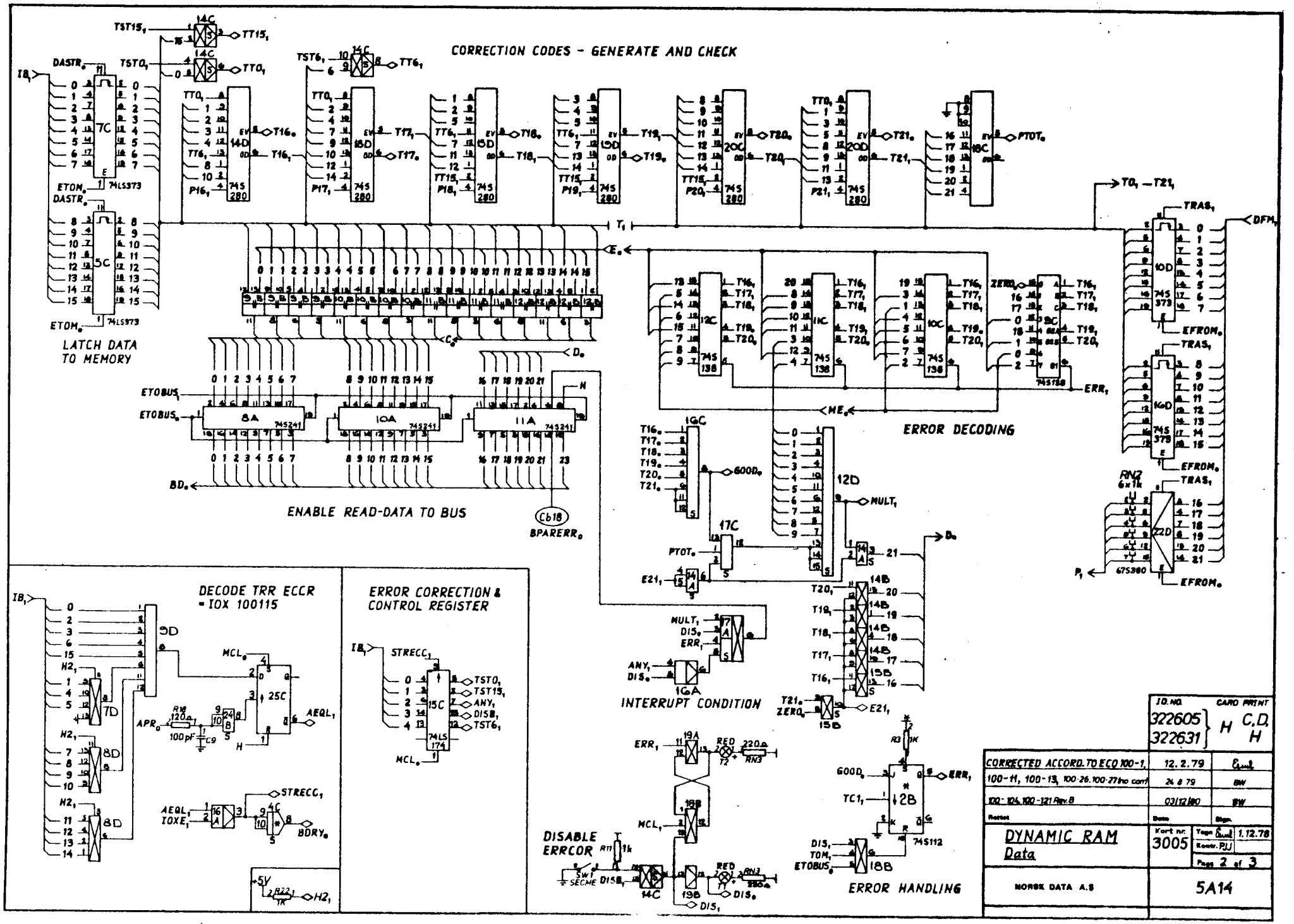
CORRECTION CODES - GENERATE AND CHECK
LATCH DATA TO MEMORY
ENABLE READ-DATA TO BUS
ERROR DECODING
DECODE TRR ECCR = IOX 100115
ERROR CORRECTION & CONTROL REGISTER
INTERRUPT CONDITION
DISABLE ERRCOR
ERROR HANDLING
DYNAMIC RAM Data
NORSK DATA A.S
5A14
Kort nr. 3005
Side 2 of 3
1.12.78
322605
322631
CARD PRINT
C.D.
CORRECTED ACCORD. TO ECO 100-1, 100-11, 100-13, 100-26, 100-27 ho corr
12.2.79
24.8.79
03/12/80
100-104, 100-121 Rev. B

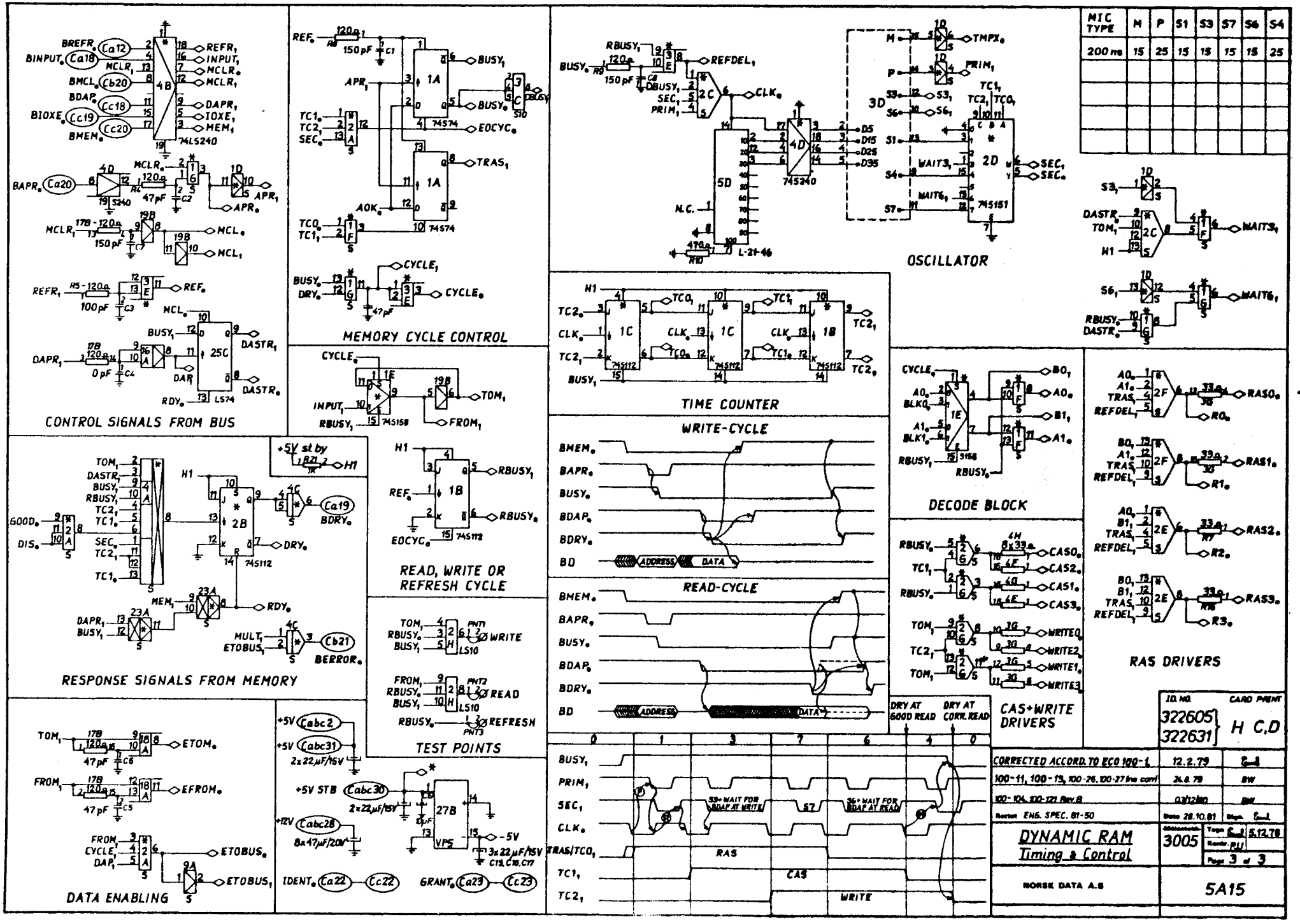
CONTROL SIGNALS FROM BUS
MEMORY CYCLE CONTROL
OSCILLATOR
TIME COUNTER
WRITE-CYCLE
READ-CYCLE
DECODE BLOCK
RAS DRIVERS
CAS+WRITE DRIVERS
RESPONSE SIGNALS FROM MEMORY
READ, WRITE OR REFRESH CYCLE
TEST POINTS
DATA ENABLING
DRY AT GOOD READ
DRY AT CORR. READ
ID. NO.
CARD PRINT
322605
322631
H C,D
CORRECTED ACCORD. TO ECO 100-1
DYNAMIC RAM
Timing & Control
3005
NORSK DATA A.S
5A15

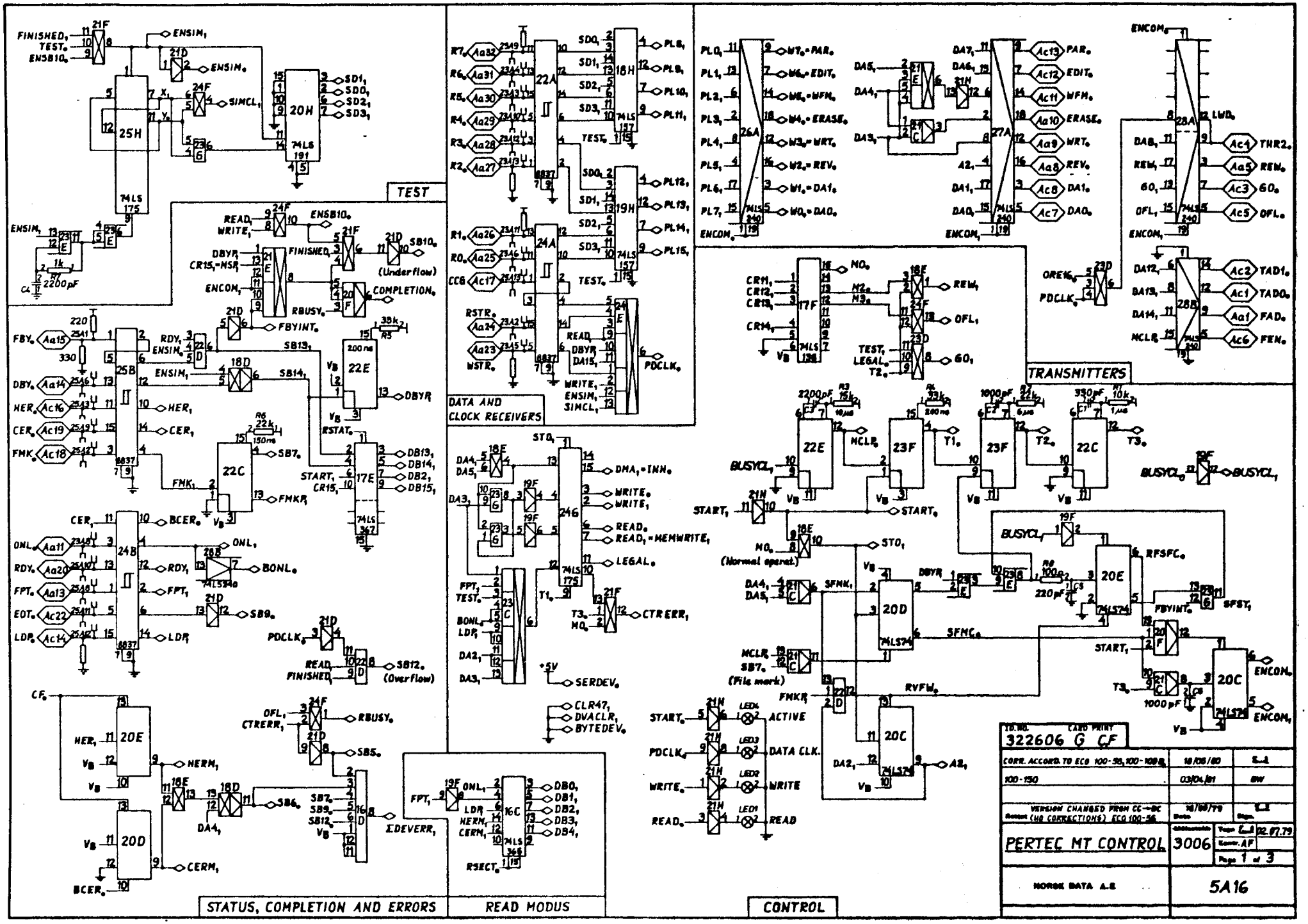
TEST
DATA AND CLOCK RECEIVERS
TRANSMITTERS
STATUS, COMPLETION AND ERRORS
READ MODUS
CONTROL
PERTEC MT CONTROL
3006
NORSK DATA A.S
5A16
322606 G CF
CORR. ACCORD. TO ECO 100-55, 100-108
100-150
03/04/81
VERSION CHANGED FROM CC→BC
(NO CORRECTIONS) ECO 100-56
12.07.79
Page 1 of 3

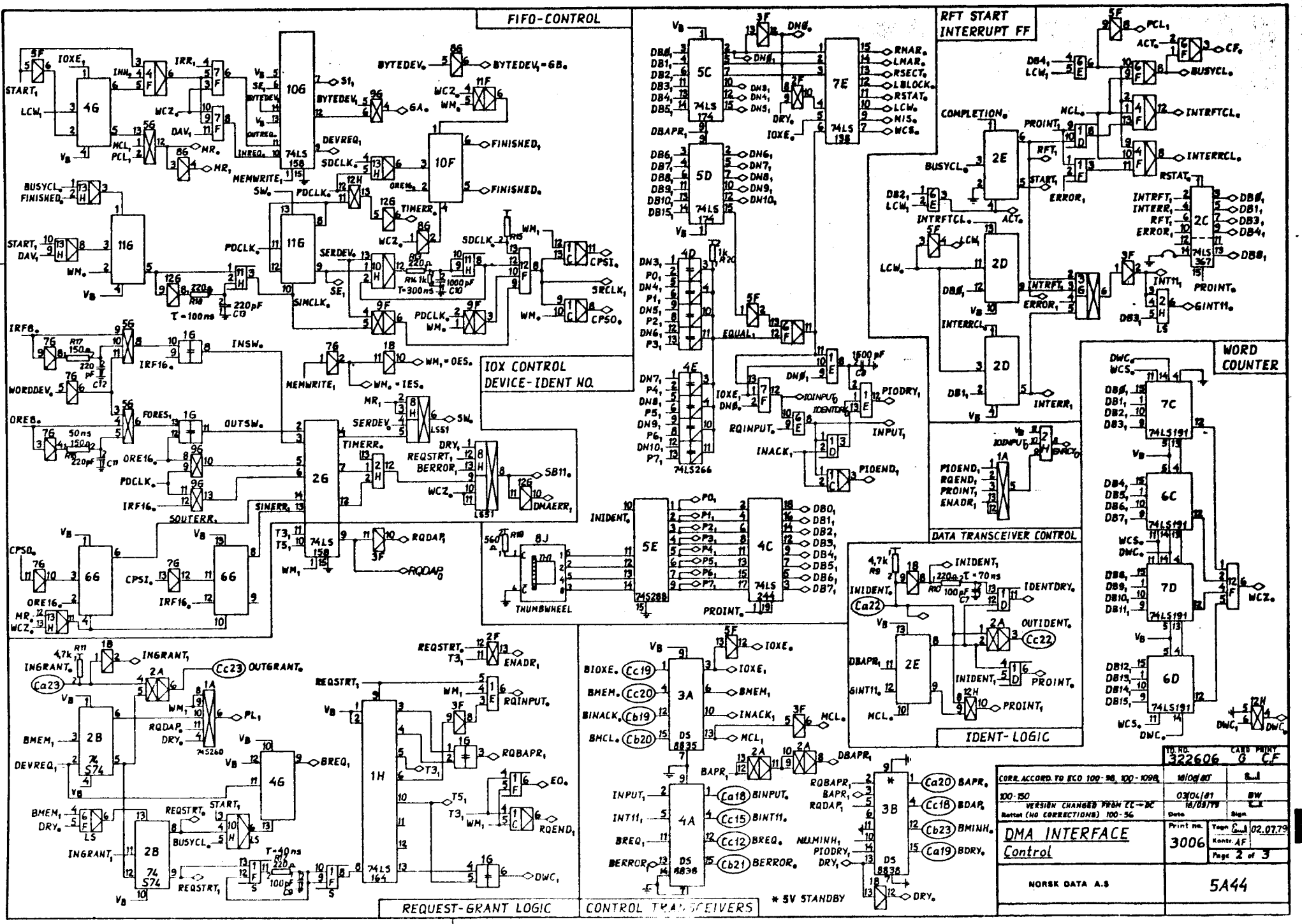
FIFO-CONTROL
RFT START INTERRUPT FF
IOX CONTROL DEVICE-IDENT NO.
WORD COUNTER
DATA TRANSCEIVER CONTROL
IDENT-LOGIC
REQUEST-GRANT LOGIC
CONTROL TRANSCEIVERS
THUMBWHEEL
* 5V STANDBY
DMA INTERFACE Control
NORSK DATA A.S
5A44
322606
Page 2 of 3

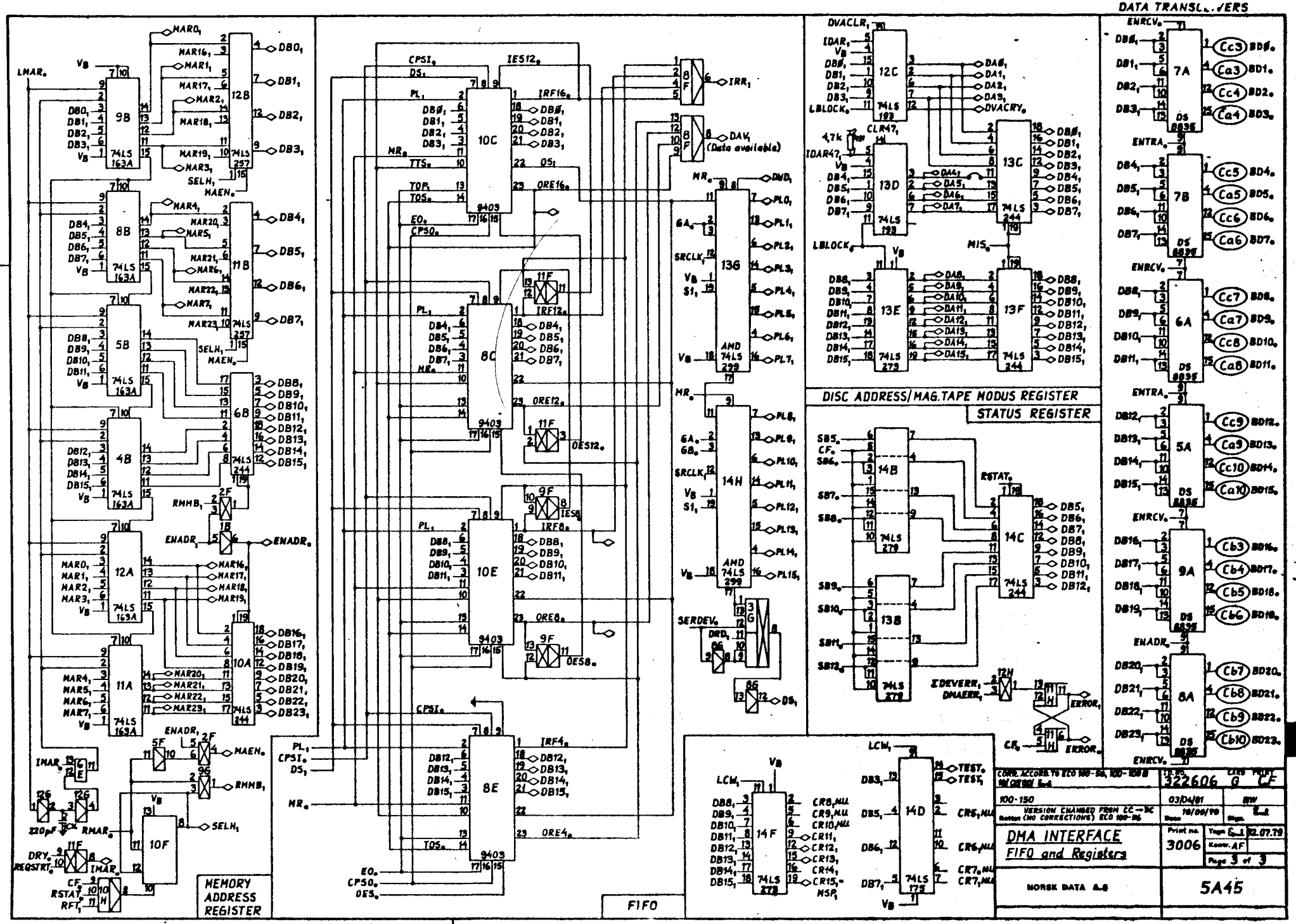
DATA TRANSLEVERS
MEMORY ADDRESS REGISTER
FIFO
DISC ADDRESS/MAG.TAPE MODUS REGISTER
STATUS REGISTER
DMA INTERFACE
FIFO and Registers
NORSK DATA A.S
5A45
3006
322606
100-150
03/04/81
16/09/79
92.07.79
Page 3 of 3

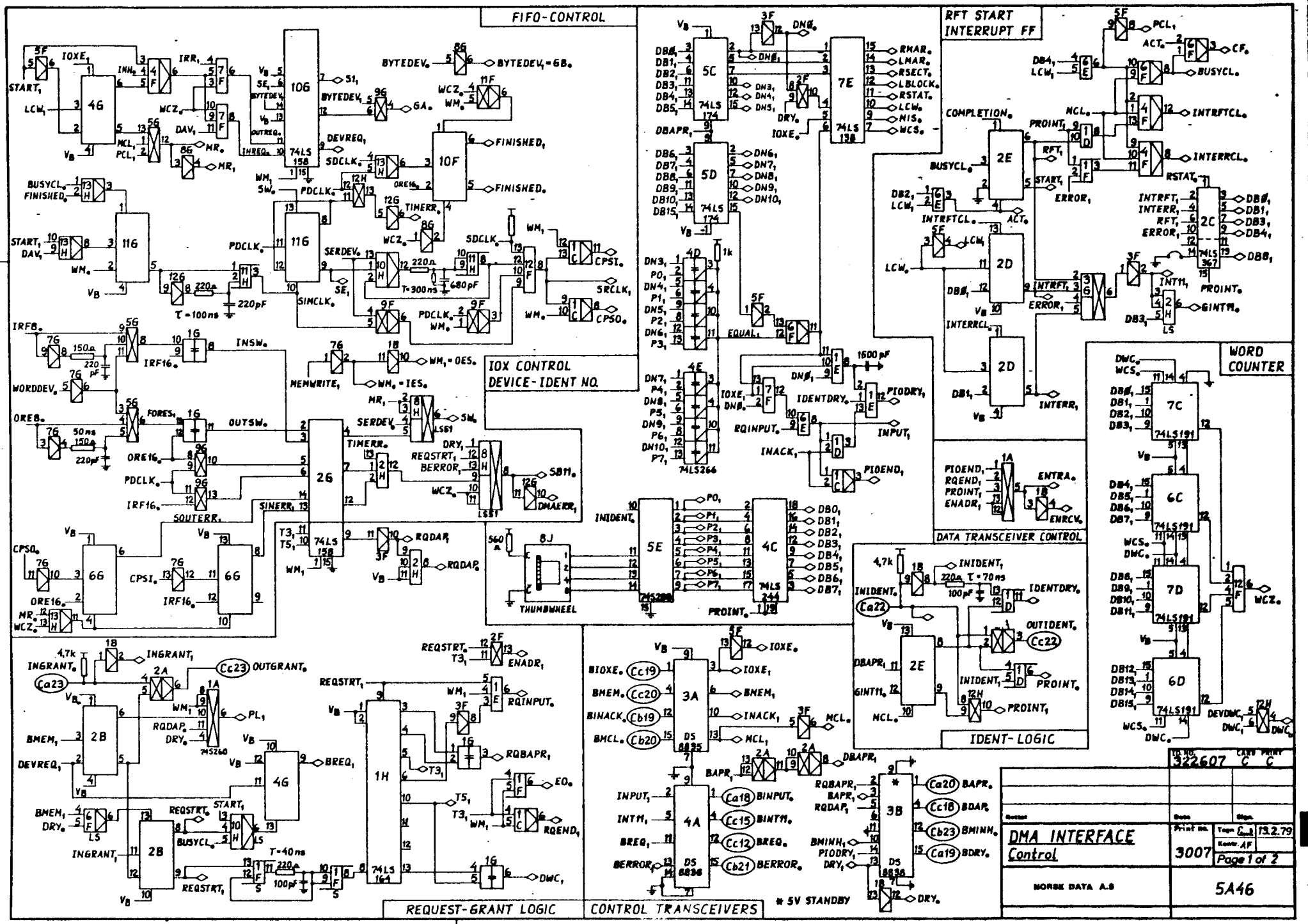
FIFO-CONTROL
RFT START INTERRUPT FF
IOX CONTROL DEVICE-IDENT NO.
WORD COUNTER
DATA TRANSCEIVER CONTROL
IDENT-LOGIC
REQUEST-GRANT LOGIC
CONTROL TRANSCEIVERS
THUMBWHEEL
* 5V STANDBY
DMA INTERFACE
Control
NORSK DATA A.S
3007
Page 1 of 2
5A46
322607

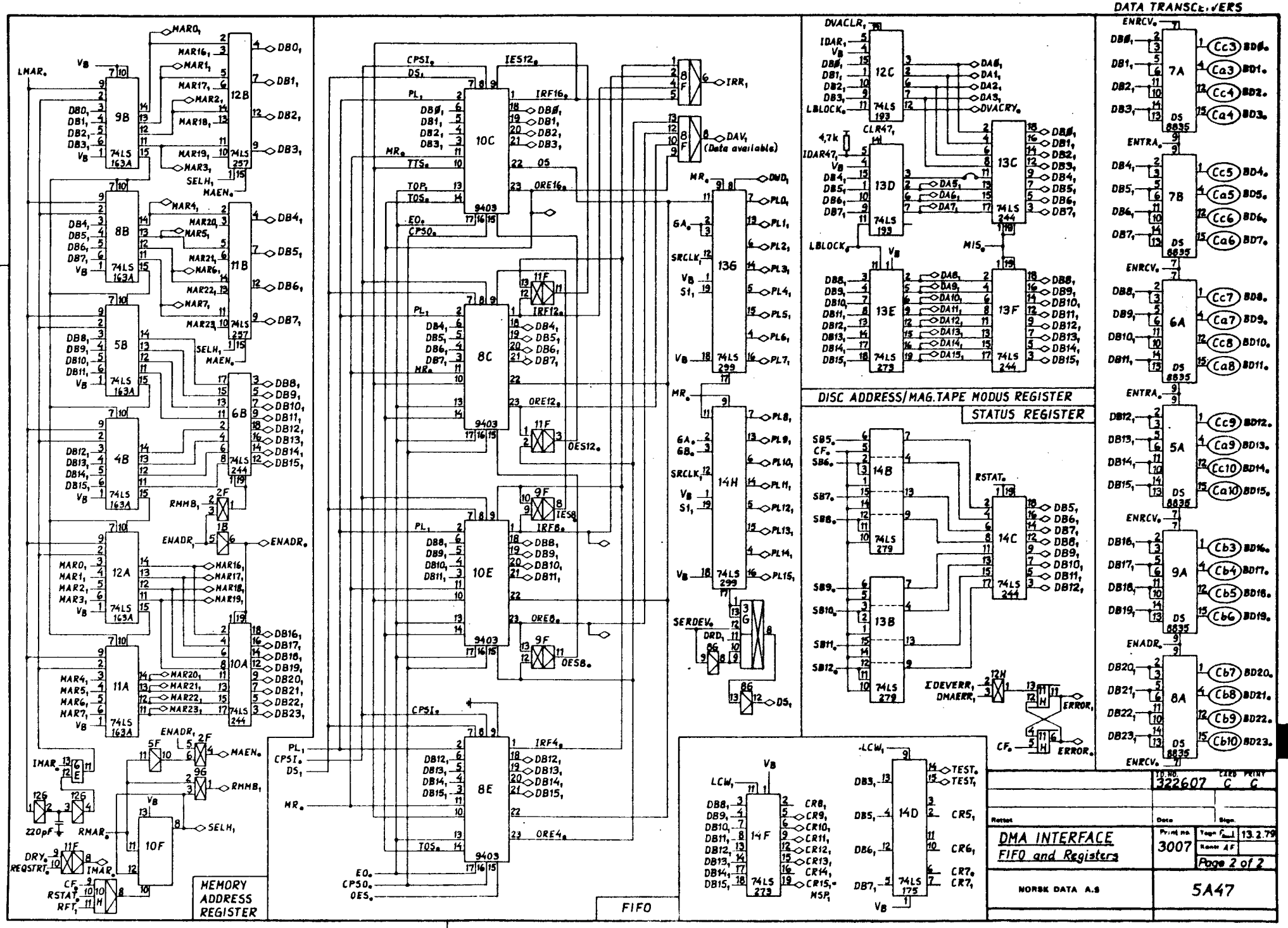
DATA TRANSCEIVERS
DISC ADDRESS/MAG.TAPE MODUS REGISTER
STATUS REGISTER
MEMORY ADDRESS REGISTER
FIFO
DMA INTERFACE
FIFO and Registers
NORSK DATA A.S
5A47
Page 2 of 2
3007
322607
13.2.79

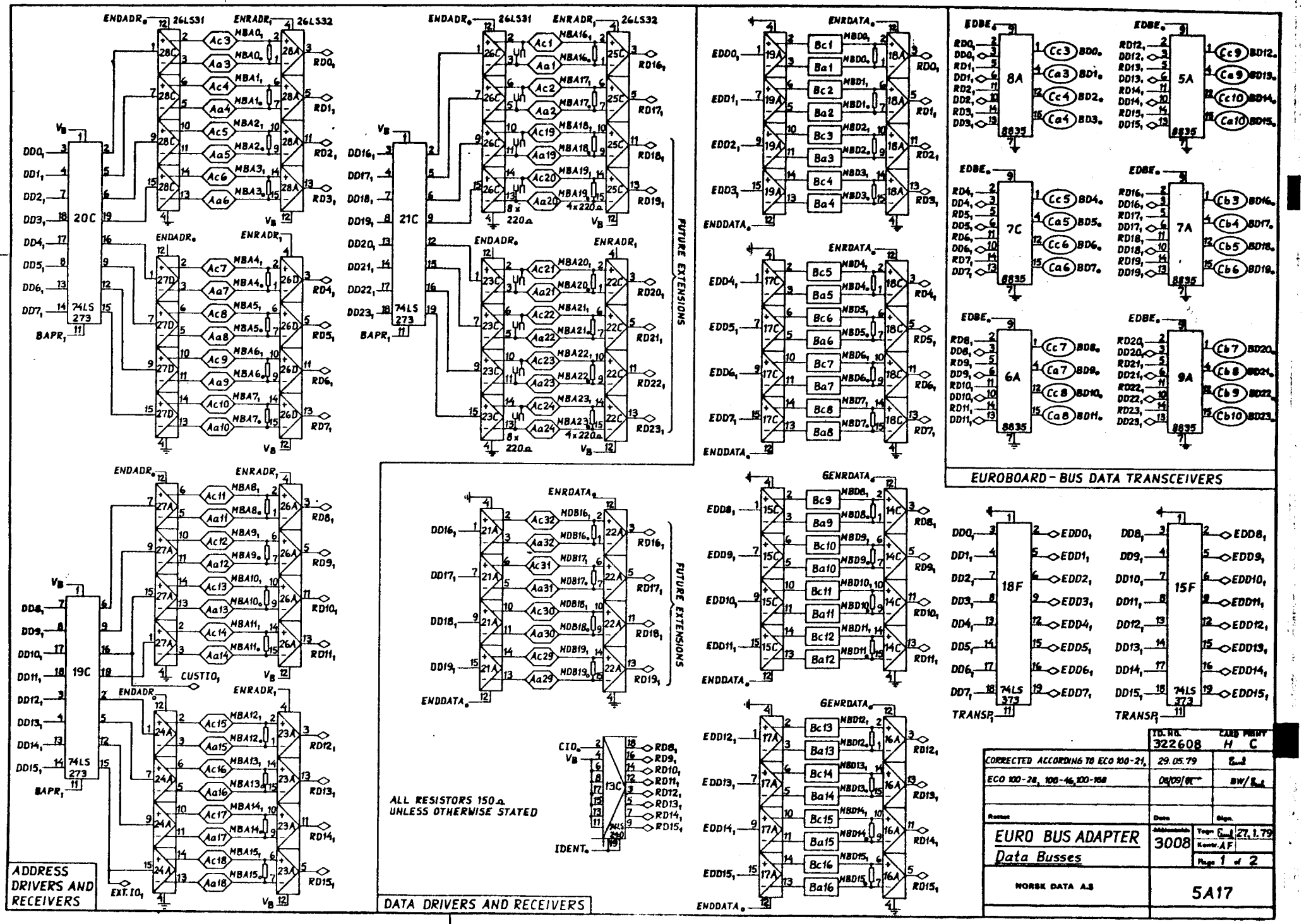
ADDRESS DRIVERS AND RECEIVERS
DATA DRIVERS AND RECEIVERS
EUROBOARD - BUS DATA TRANSCEIVERS
FUTURE EXTENSIONS
ALL RESISTORS 150Ω UNLESS OTHERWISE STATED
EURO BUS ADAPTER
Data Busses
NORSK DATA A.S
5A17
3008
322608
CORRECTED ACCORDING TO ECO 100-21
ECO 100-28, 100-46, 100-158
29.05.79
27.1.79
1 of 2

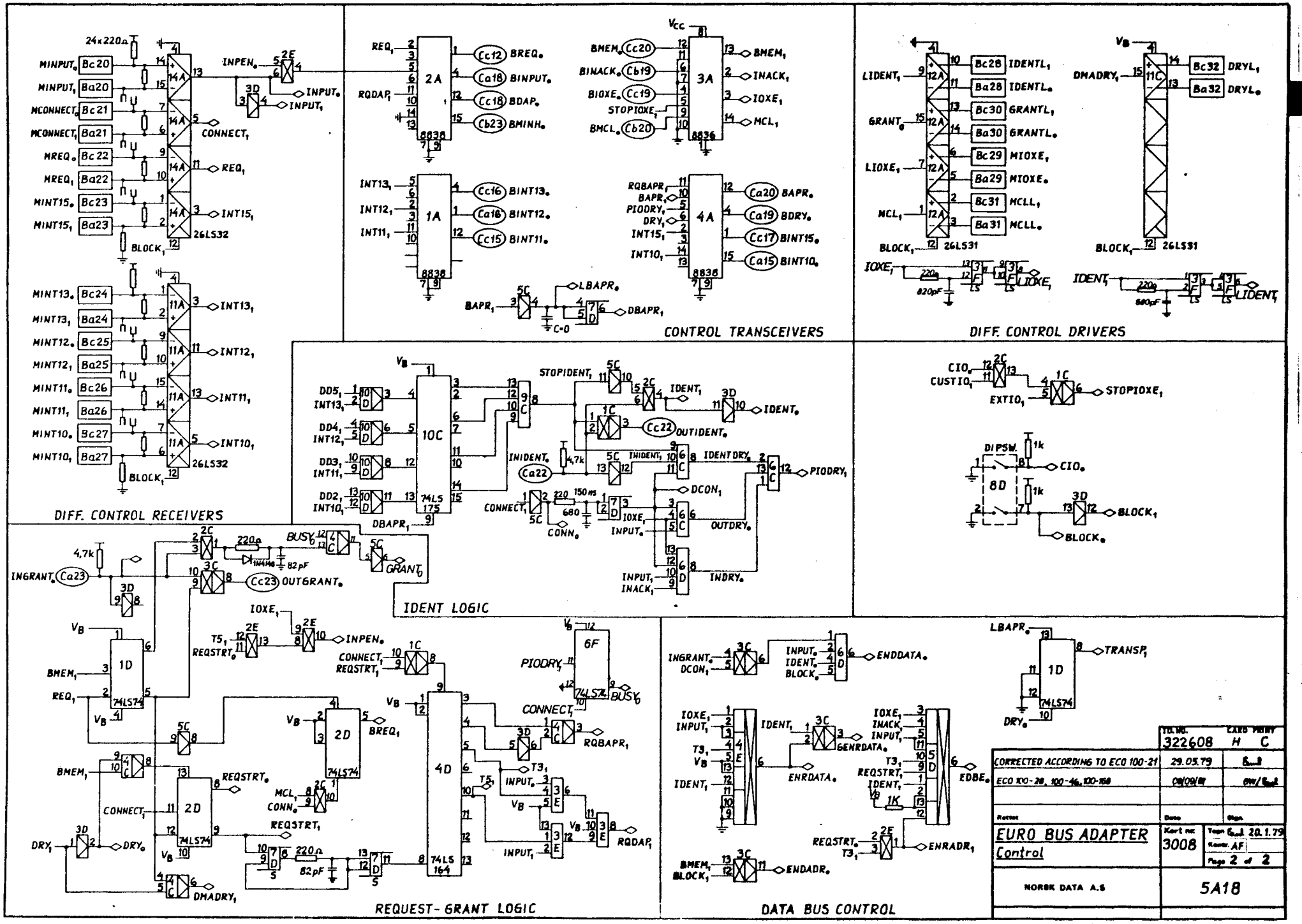
DIFF. CONTROL RECEIVERS
CONTROL TRANSCEIVERS
DIFF. CONTROL DRIVERS
IDENT LOGIC
REQUEST-GRANT LOGIC
DATA BUS CONTROL
26LS32
26LS31
8838
74LS 175
74LS 164
74LS74
EURO BUS ADAPTER
Control
3008
322608
H C
29.05.79
NORSK DATA A.S
5A18
Page 2 of 2

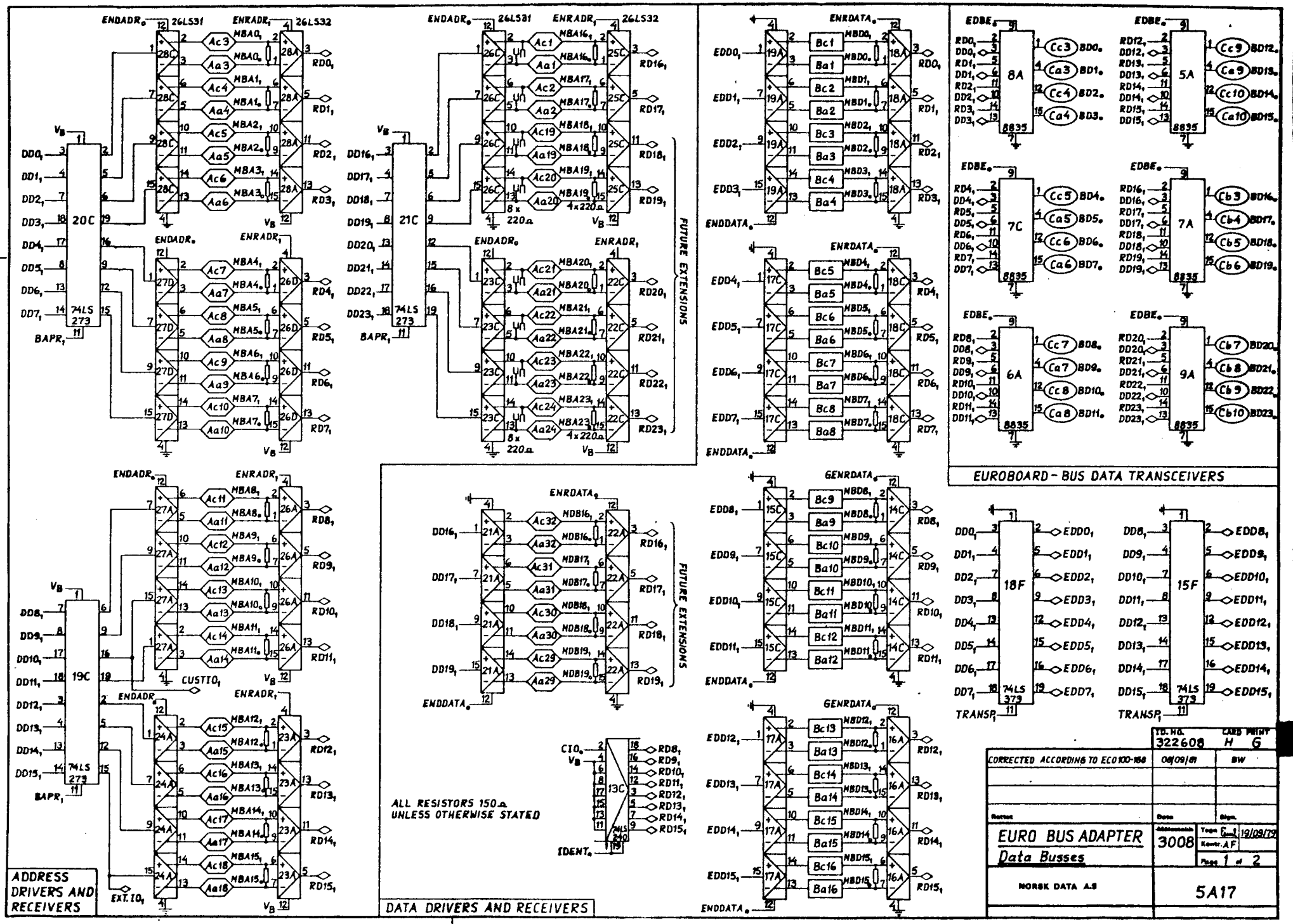
ADDRESS DRIVERS AND RECEIVERS
DATA DRIVERS AND RECEIVERS
EUROBOARD - BUS DATA TRANSCEIVERS
FUTURE EXTENSIONS
ALL RESISTORS 150Ω UNLESS OTHERWISE STATED
20C
21C
19C
74LS 273
26LS31
26LS32
8A
5A
7C
7A
6A
9A
18F
15F
74LS 373
13C
74LS 240
8835
EURO BUS ADAPTER
Data Busses
NORSK DATA A.S
5A17
3008
322608
CORRECTED ACCORDING TO ECO 100-168
08/09/81
19/09/79
Page 1 of 2

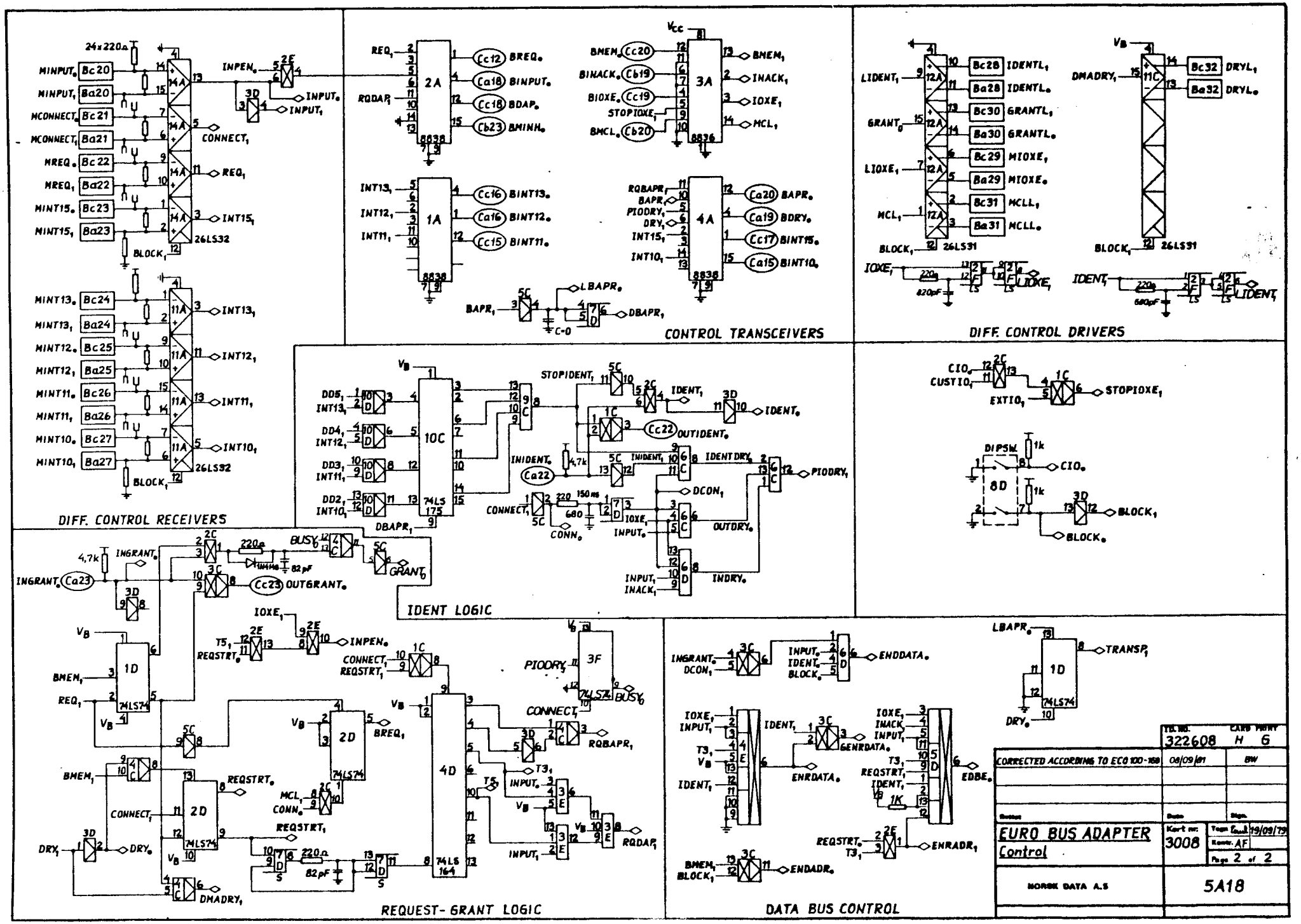
DIFF. CONTROL RECEIVERS
CONTROL TRANSCEIVERS
DIFF. CONTROL DRIVERS
IDENT LOGIC
REQUEST- GRANT LOGIC
DATA BUS CONTROL
EURO BUS ADAPTER
Control
NORSK DATA A.S
5A18
322608
H 6
3008
19/09/79
2 of 2

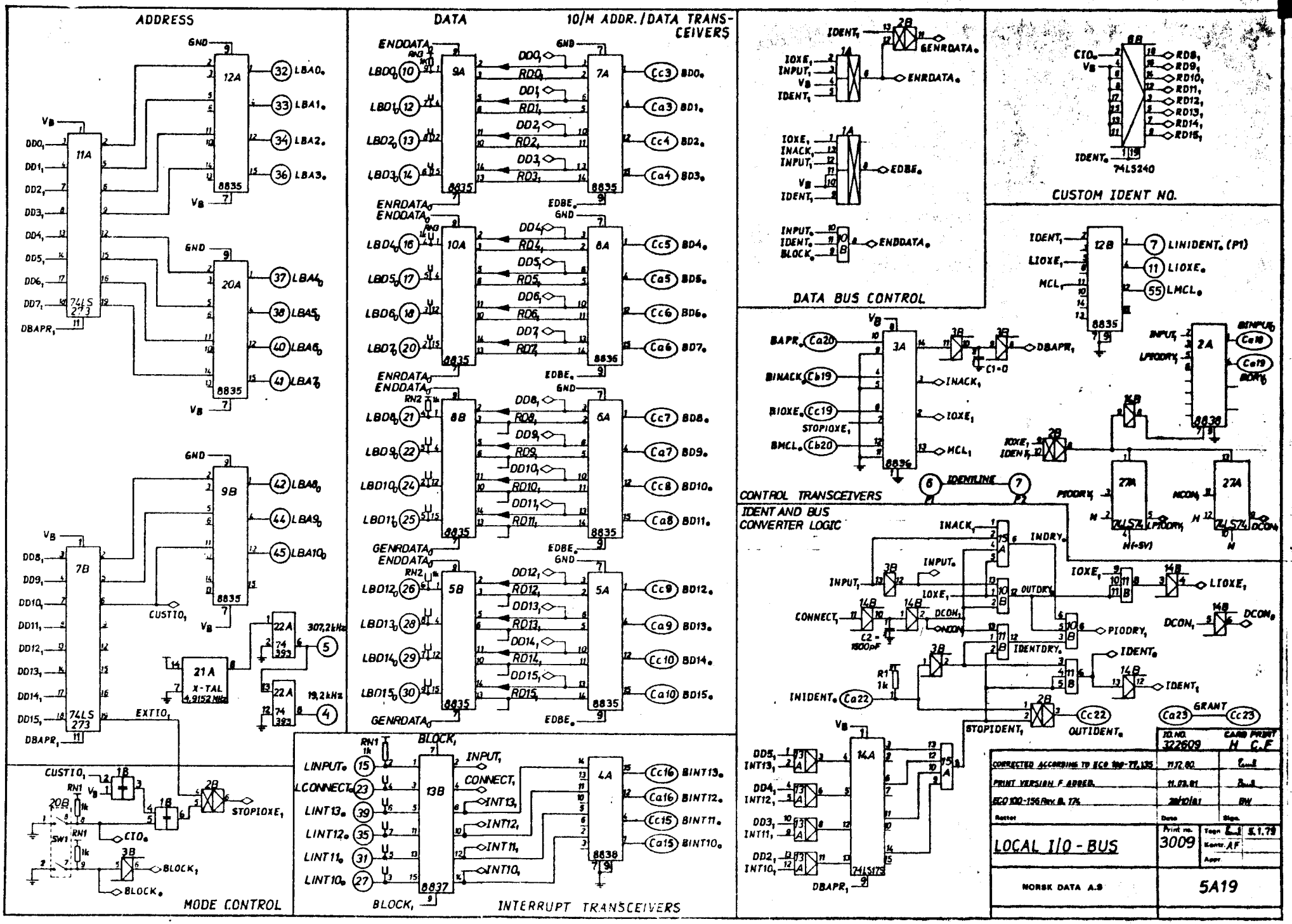
ADDRESS
DATA
10/M ADDR./DATA TRANSCEIVERS
CUSTOM IDENT NO.
DATA BUS CONTROL
CONTROL TRANSCEIVERS
IDENT AND BUS CONVERTER LOGIC
MODE CONTROL
INTERRUPT TRANSCEIVERS
LOCAL I/O - BUS
NORSK DATA A.S
5A19
3009
322609
H C.F
11.12.80
11.03.81
28/10/81
5.1.79

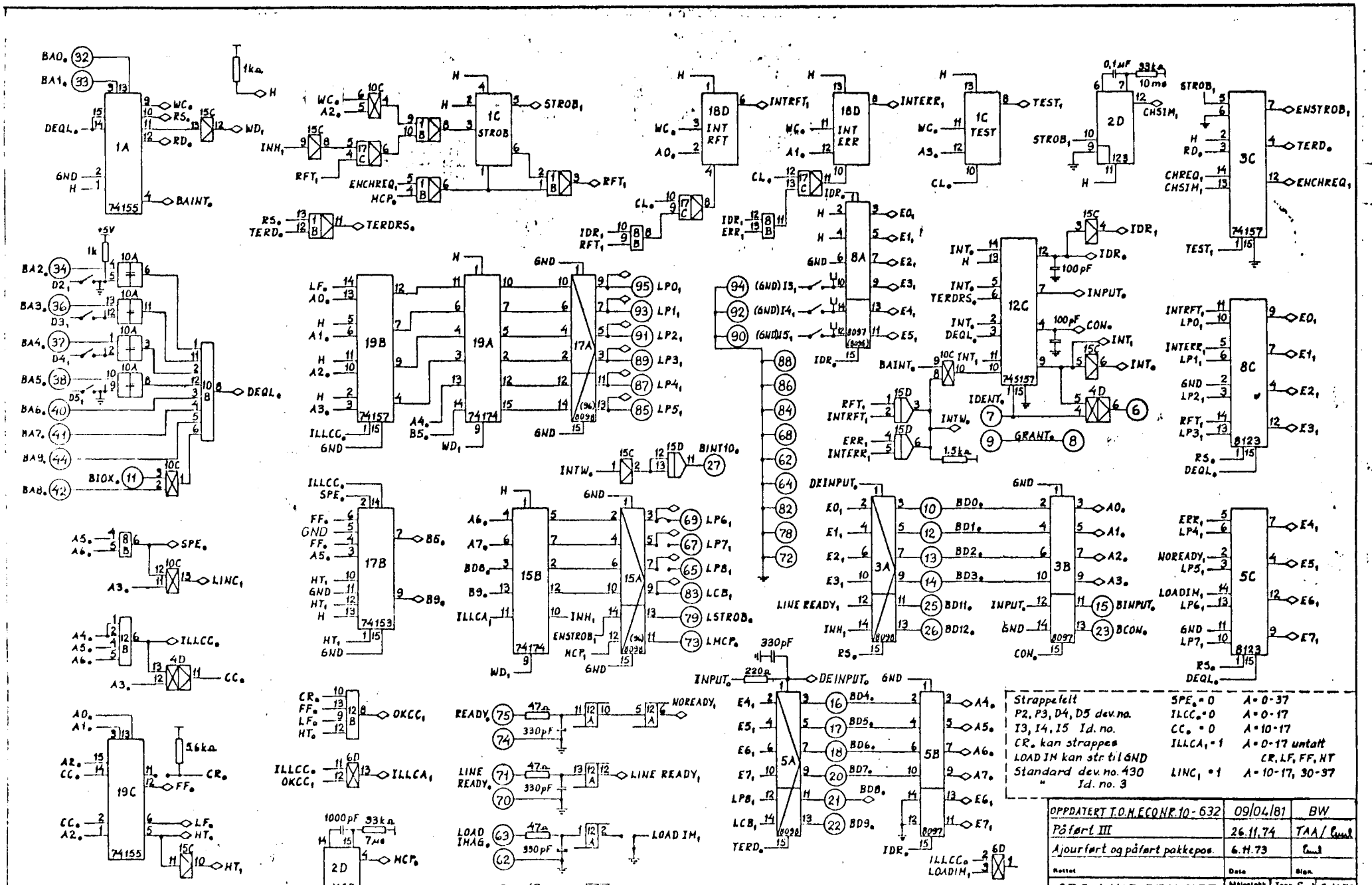
1A 74155
1C STROB
18D INT RFT
18D INT ERR
1C TEST
2D
3C 74157
19B 74157
19A 74174
17A 8098
8A 8097
12C 74157
8C 8123
17B 74153
15B 74174
15A 8098
3A 8098
3B 8097
5C 8123
19C 74155
2D MCP
5A 8098
5B 8097
Strappelelt
P2, P3, D4, D5 dev.no.
I3, I4, I5 Id. no.
CR. kan strappes
LOAD IN kan str. til GND
Standard dev. no. 430
Id. no. 3
SPE. = 0
ILCC. = 0
CC. = 0
ILLCA. = 1
LINC. = 1
A = 0-37
A = 0-17
A = 10-17
A = 0-17 untatt CR, LF, FF, HT
A = 10-17, 30-37
OPPDATERT T.O.M. ECO NR. 10-632 09/04/81 BW
Påført III 26.11.74 TAA
Ajourført og påført pakkepos. 6.11.73
Rettet Dato Sign.
CDC LINE PRINTER INTERFACE 1047/III
Tegn. 5.10.73
Kontr. E.J.
Appr.
A/S NORSK DATA-ELEKTRONIKK
2A47
1 pk. 7400
2 " 7402
1 " 74504
2 " 7408
1 " 7414
1 " 7420
1 pk. 7432
1 " 7438
2 " 7474
1 " 7486
1 " 74123
1 " 74153
2 pk. 74157
1 " 74174
3 " 8097
4 " 8098
2 " 8123

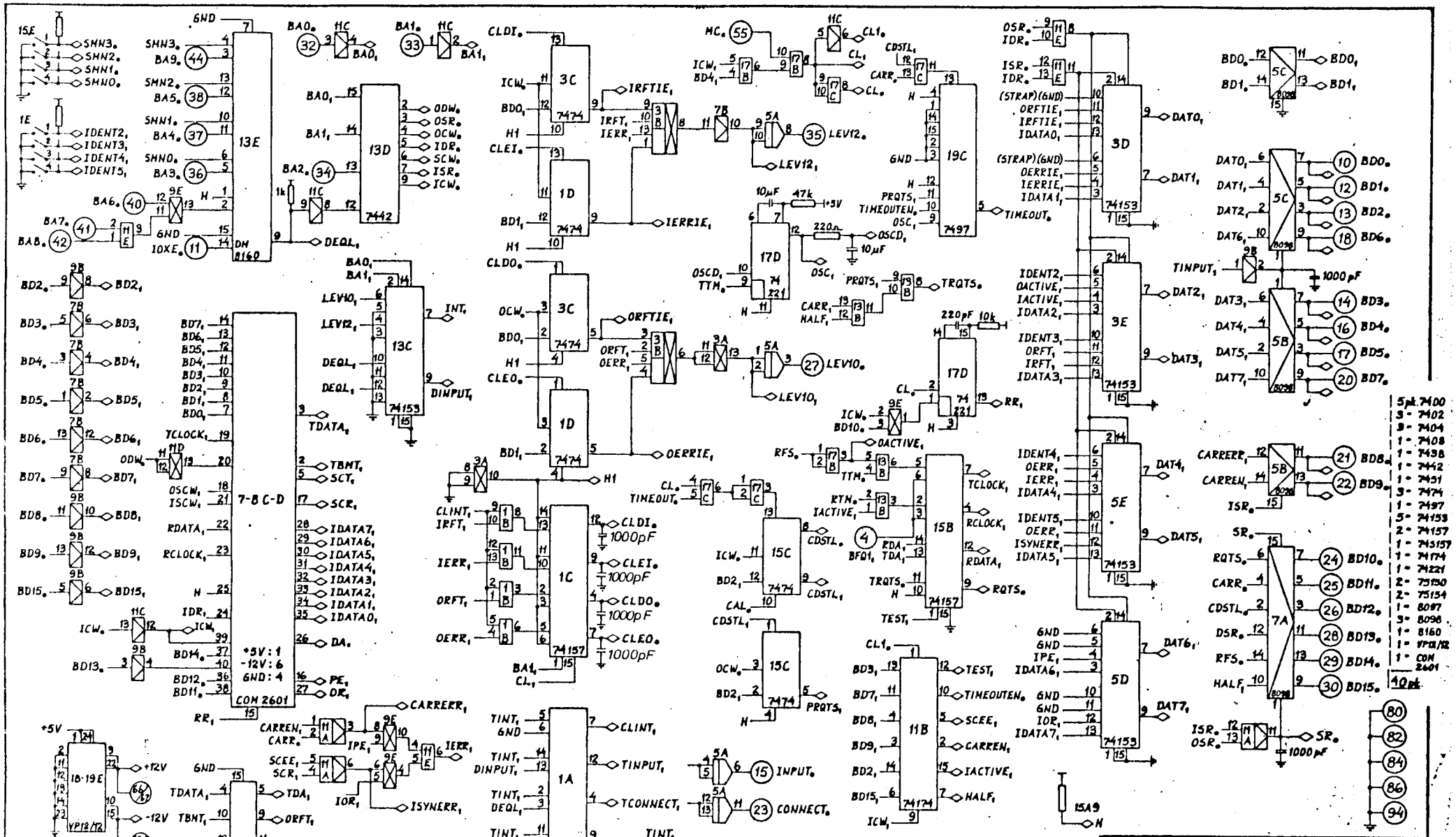
13E
DM 8160
13D
7442
7-8 C-D
COM 2601
13C
74153
3C
7474
1D
7474
1C
74157
1A
74157
7E
8097
17D
74221
19C
7497
15C
7474
15B
74157
11B
74174
3D
74153
3E
74153
5E
74153
5D
74153
5C
8098
5B
8098
7A
8098
18-19E
YP12/12
Oppdat. iflg. ECO 10-630
19/03/81
BW
Ajourført
20.11.73
TU / Gunn
Rettet
Dato
Sign.
SYNCHRONOUS MODEM BUFFER 1050
Målestokk
Tegn. Gunn
6.11.73
Kontr. TU
Appr.
A/S NORSK DATA-ELEKTRONIKK
2A50

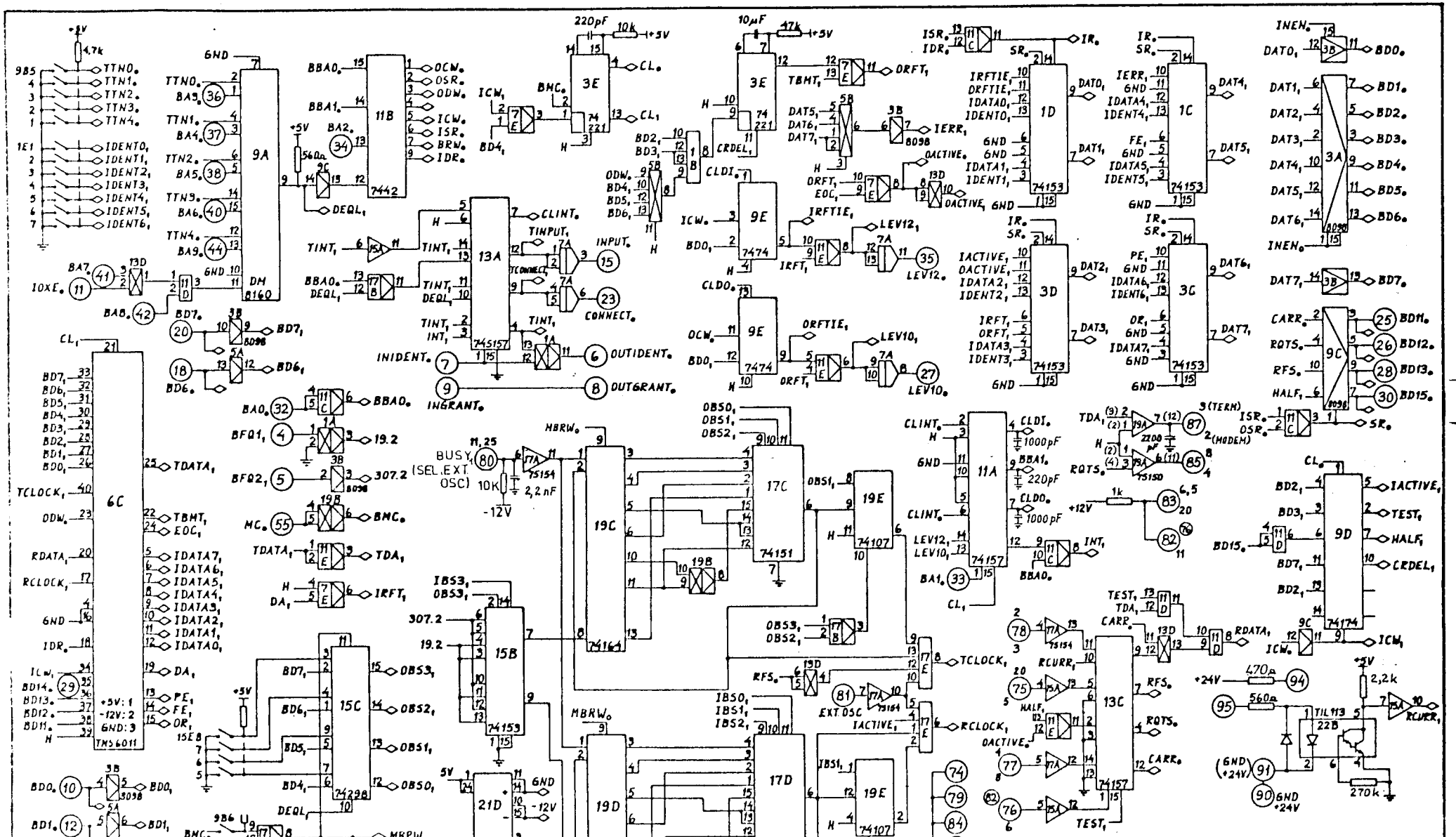
9A
DM 8160
11B
7442
3E
74221
9E
7474
13A
74S157
6C
TMS6011
19C
74151
17C
74151
19E
74107
11A
74157
3D
74153
1D
74153
1C
74153
3A
8098
9C
3C
74153
9D
74174
13C
74157
15B
74153
15C
74298
15D
74298
21D
21E
19D
74164
17D
74107
19E
74107
TIL113
2N3904
2N3906
1N4151
BUSY (SEL.EXT. OSC)
EXT.OSC
OUTIDENT.
OUTGRANT.
INGRANT.
CONNECT.
INPUT.
IOXE.
TCLOCK.
RCLOCK.
RCURR.
RQTS.
RFS.
CARR.
TEST.
HALF.
CREDEL.
IACTIVE.
INEN.
MBRW.
OPPDAT. IFLG.ECO 10-618 08/04/80 BW
Ajourf og forandr. f.A.t.C 18.6.75 TU/
Ajourf og påført A. 4.4.75 TU/
Rettet Dato Sign.
TERMINAL BUFFER
1095.F,G,H
Målestokk
Tegn. 3.3.75
Kontr. T.U.
Appr.
A/S NORSK DATA-ELEKTRONIKK
2A95

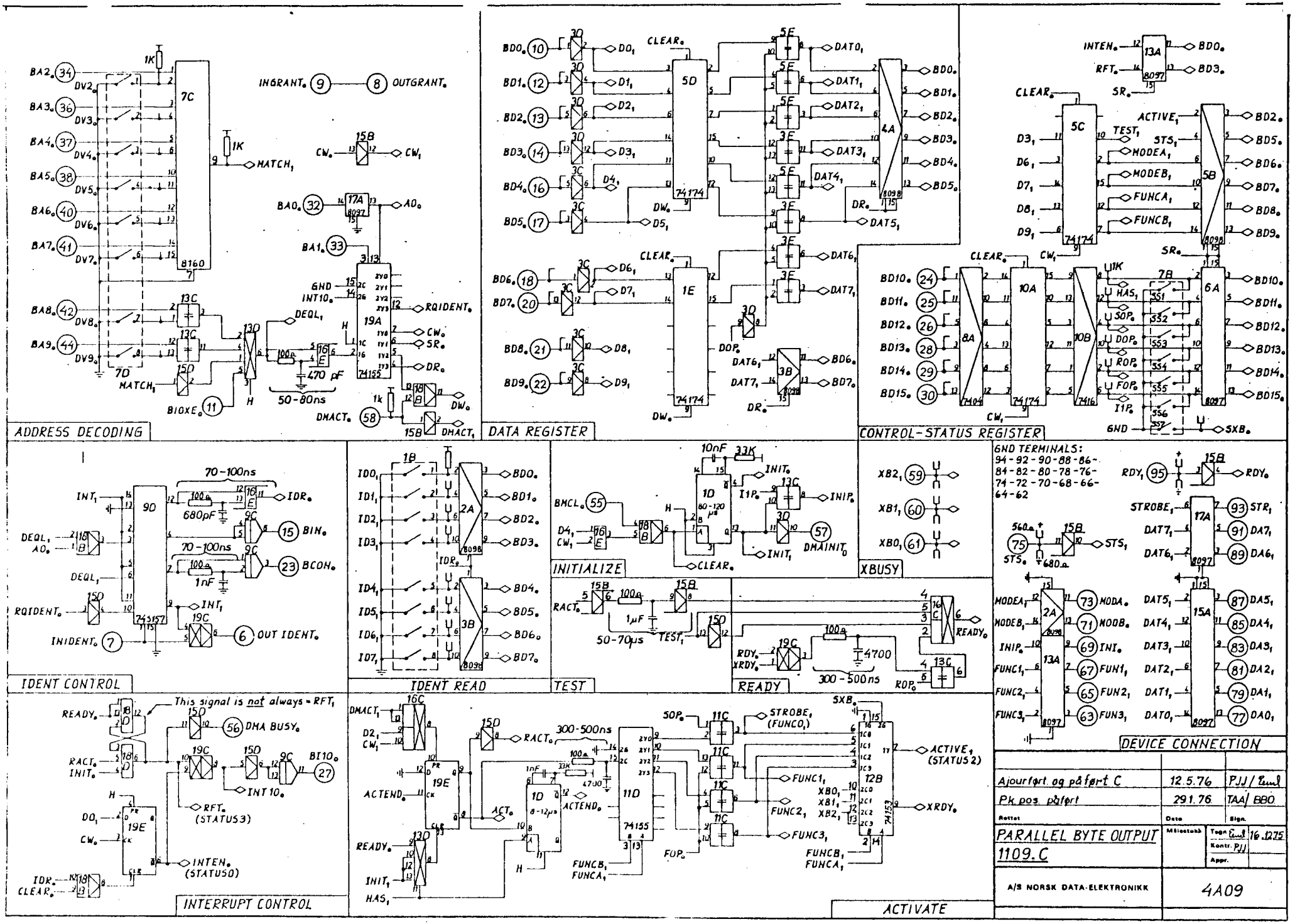
ADDRESS DECODING
DATA REGISTER
CONTROL-STATUS REGISTER
IDENT CONTROL
IDENT READ
INITIALIZE
TEST
XBUSY
READY
DEVICE CONNECTION
INTERRUPT CONTROL
ACTIVATE
GND TERMINALS:
94-92-90-88-86-
84-82-80-78-76-
74-72-70-68-66-
64-62
Ajourført og påført C
12.5.76
PJJ/
Pk.pos. påført
29.1.76
TAA/
Rettet
Dato
Sign.
PARALLEL BYTE OUTPUT
1109.C
A/S NORSK DATA-ELEKTRONIKK
4A09

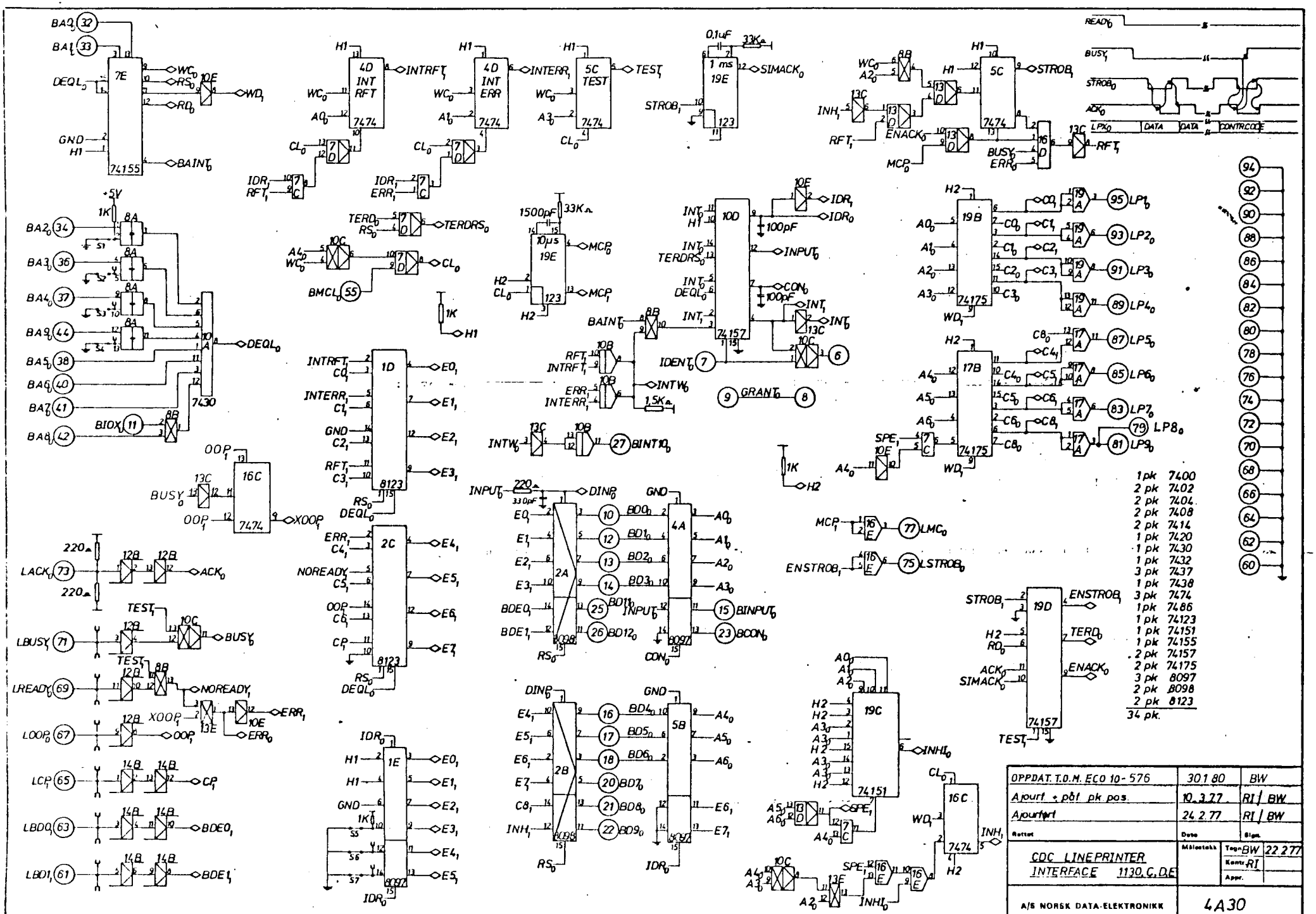
7E 74155
4D INT RFT 7474
4D INT ERR 7474
5C TEST 7474
1 ms 19E
5C 7474
19B 74175
17B 74175
10D 74157
19E
7430
1D 8123
2C 8123
1E 8097
2A 8098
2B 8098
4A 8097
5B 8097
16C 7474
19D 74157
19C 74151
16C 7474
READ0
BUSY1
STROB0
ACK0
LP0 DATA DATA CONTRCODE
1pk 7400
2pk 7402
2pk 7404
2pk 7408
2pk 7414
1pk 7420
1pk 7430
1pk 7432
3pk 7437
1pk 7438
3pk 7474
1pk 7486
1pk 74123
1pk 74151
1pk 74155
2pk 74157
2pk 74175
3pk 8097
2pk 8098
2pk 8123
34 pk.
OPPDAT. T.O.M. ECO 10-576 30.1.80 BW
Ajourf. + pöf pk pos. 10.3.77 RI / BW
Ajourfört 24.2.77 RI / BW
Rettet Dato Sign.
CDC LINEPRINTER INTERFACE 1130.C.D.E
Målestokk Tegn. BW 22.2.77
Kontr. RI
Appr.
A/S NORSK DATA-ELEKTRONIKK
4A30

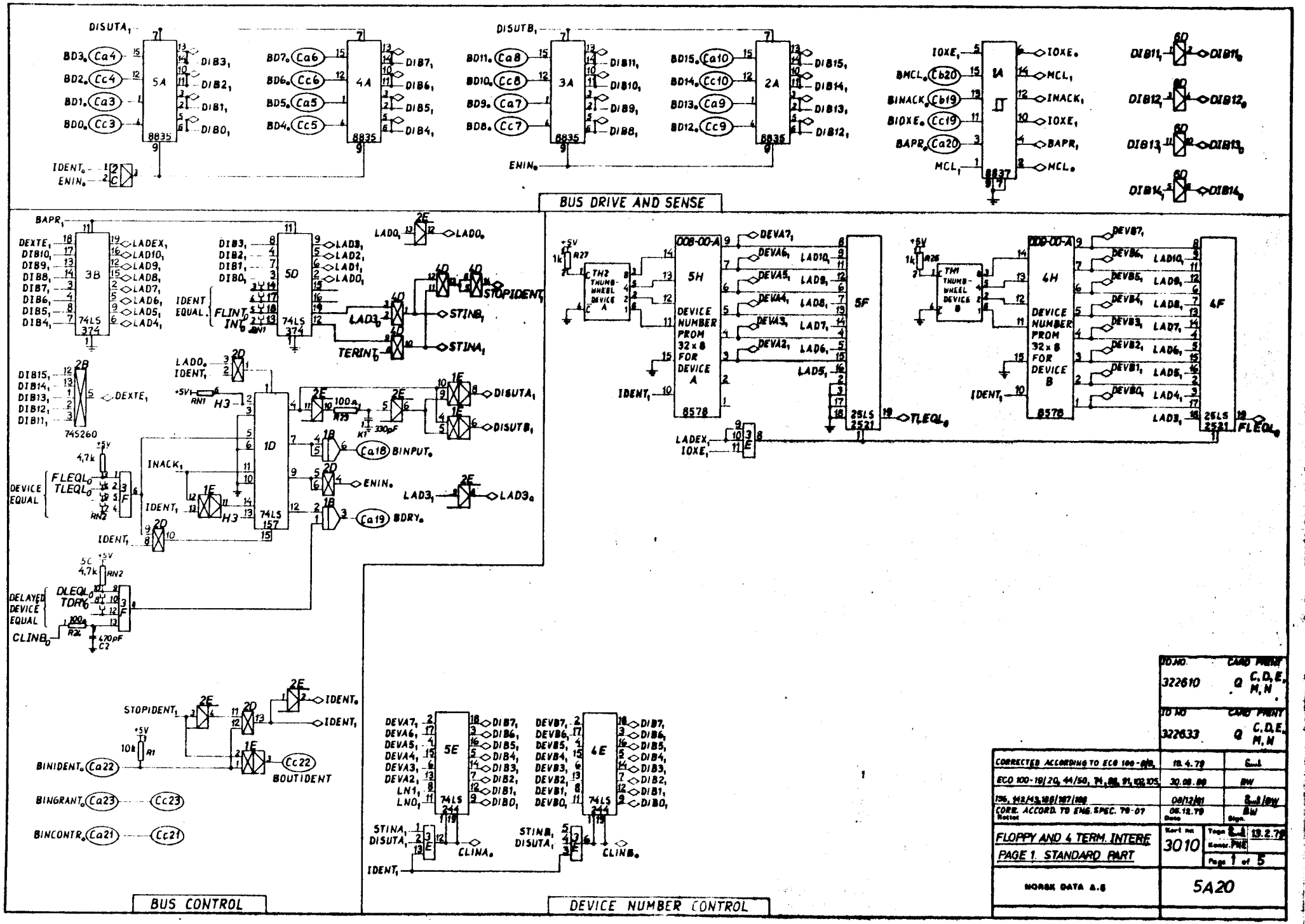

DOJNO.	CARD PRINT
322610 Q	C, D, E, M, N
TO NO	CARD PRINT
322633 Q	C, D, E, M, N

CORRECTED ACCORDING TO ECO 100-6/8.	18.4.79	[illegible]
ECO 100-19/20, 44/50, 74, 88, 91, 102, 105.	30.08.80	BW
136, 142/143, 166/167/168	08/12/81	[illegible]/BW
CORR. ACCORD. TO ENG. SPEC. 79-07 Notice	05.12.79 Date	BW Sign.

FLOPPY AND 4 TERM. INTERF.
PAGE 1. STANDARD PART

Kort no. 3010 | Tegn. [illegible] 13.2.79 | Konstr. PNE | Side 1 av 5

NORSK DATA A.S

5A20

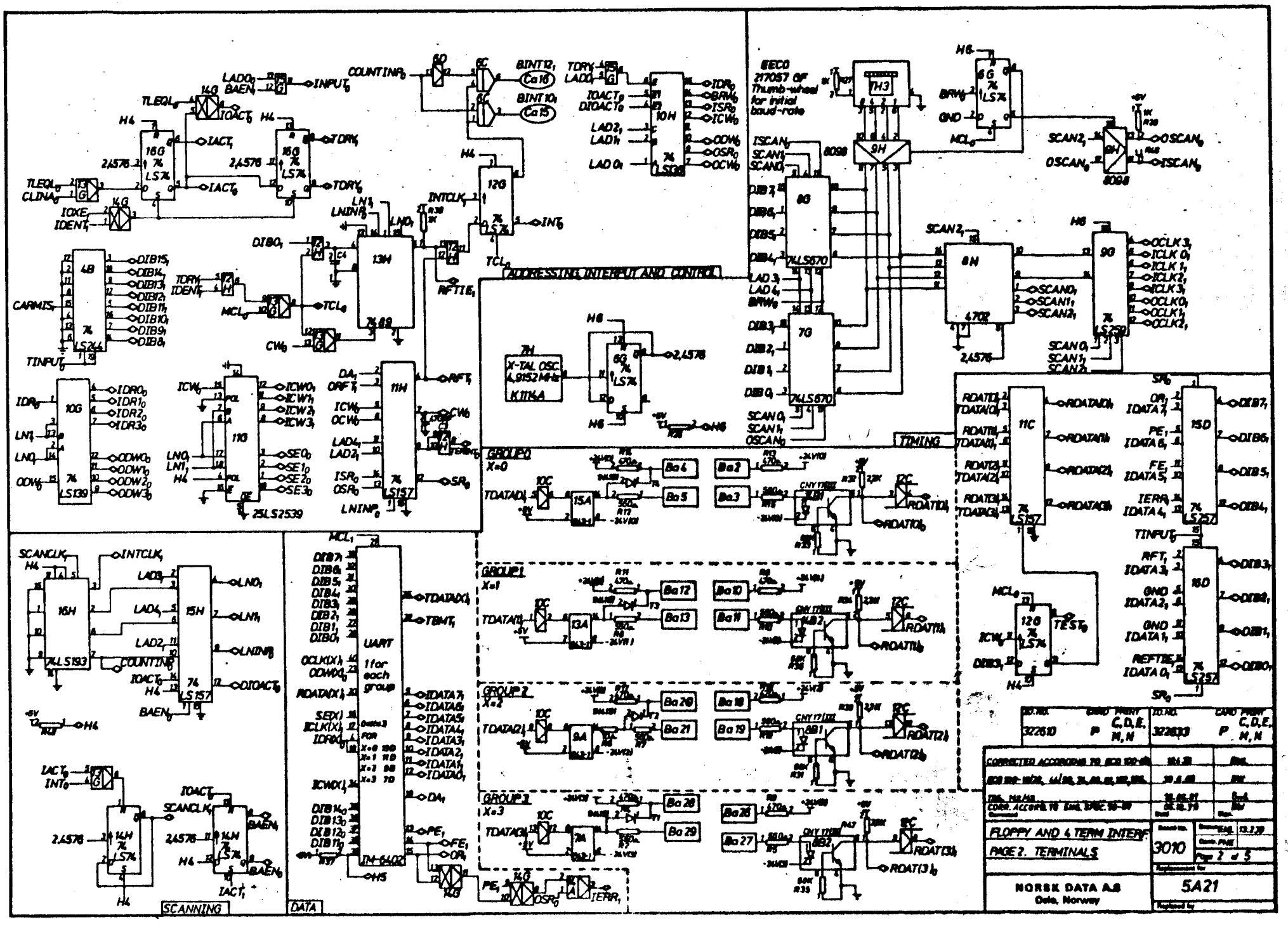
ADDRESSING, INTERRUPT AND CONTROL
TIMING
SCANNING
DATA
GROUP 0
X=0
GROUP 1
X=1
GROUP 2
X=2
GROUP 3
X=3
UART
1 for each group
TM-6402
EECO 217057 OF Thumb-wheel for initial baud-rate
X-TAL OSC. 4,9152 MHz
FLOPPY AND 4 TERM INTERF.
PAGE 2. TERMINALS
3010
Page 2 of 5
NORSK DATA A.S
Oslo, Norway
5A21

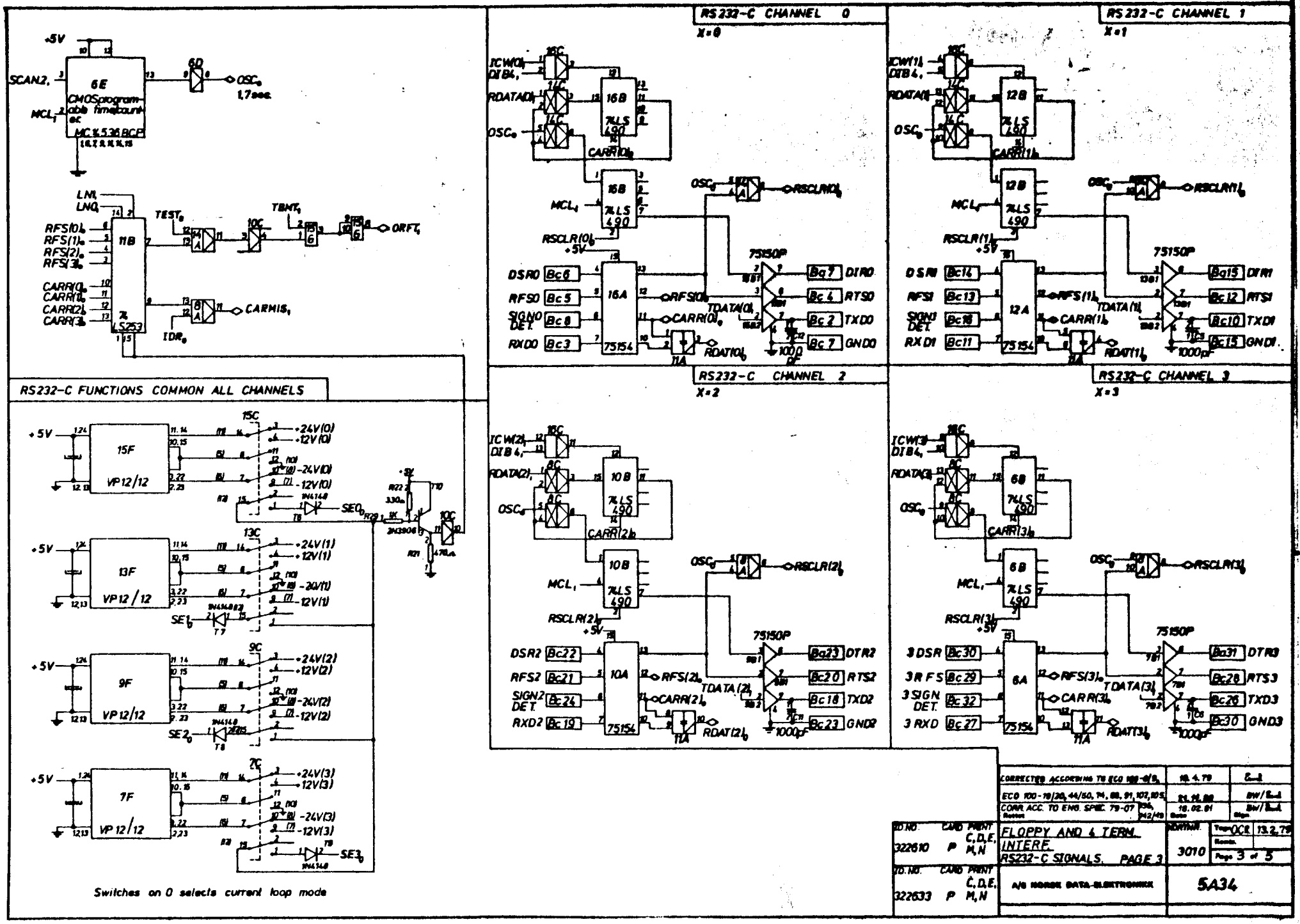
RS232-C CHANNEL 0
X=0
RS232-C CHANNEL 1
X=1
RS232-C CHANNEL 2
X=2
RS232-C CHANNEL 3
X=3
RS232-C FUNCTIONS COMMON ALL CHANNELS
+5V
SCAN2
MCL1
6E
CMOS programmable timebase etc
MC14536BCP
OSC0
1,7sec
LN1
LN0
TEST0
TBNT1
RFS(0)0
RFS(1)0
RFS(2)0
RFS(3)0
CARR(0)0
CARR(1)0
CARR(2)0
CARR(3)0
11B
74LS253
ORFT1
CARMIS1
IDR0
ICW(0)1
DIB4
RDATA(0)1
16B
74LS490
CARR(0)0
MCL1
RSCLR(0)0
RSCLR(0)1
DSR0
RFS0
SIGN0 DET.
RXD0
16A
75154
RFS(0)0
CARR(0)0
RDAT(0)0
TDATA(0)1
75150P
DTR0
RTS0
TXD0
GND0
1000 pF
ICW(1)1
DIB4
RDATA(1)1
12B
CARR(1)0
RSCLR(1)0
RSCLR(1)1
DSR1
RFS1
SIGN1 DET.
RXD1
12A
RFS(1)0
CARR(1)0
RDAT(1)0
TDATA(1)1
DTR1
RTS1
TXD1
GND1
1000pF
ICW(2)1
DIB4
RDATA(2)1
10B
CARR(2)0
RSCLR(2)0
RSCLR(2)1
DSR2
RFS2
SIGN2 DET.
RXD2
10A
RFS(2)0
CARR(2)0
RDAT(2)0
TDATA(2)1
DTR2
RTS2
TXD2
GND2
1000pF
ICW(3)1
DIB4
RDATA(3)1
6B
CARR(3)0
RSCLR(3)0
RSCLR(3)1
3 DSR
3 RFS
3 SIGN DET.
3 RXD
6A
RFS(3)0
CARR(3)0
RDAT(3)0
TDATA(3)1
DTR3
RTS3
TXD3
GND3
1000pF
15F
VP12/12
13F
VP12/12
9F
VP12/12
7F
VP12/12
15C
13C
9C
7C
+24V(0)
+12V(0)
-24V(0)
-12V(0)
+24V(1)
+12V(1)
-24V(1)
-12V(1)
+24V(2)
+12V(2)
-24V(2)
-12V(2)
+24V(3)
+12V(3)
-24V(3)
-12V(3)
SE0
SE1
SE2
SE3
1N4148
2N3906
R22 330Ω
R21 470Ω
Switches on 0 selects current loop mode
CORRECTED ACCORDING TO ECO 100-0/5
10.4.79
ECO 100-10/20, 44/50, 74, 88, 91, 107, 105
21.11.80
CORR ACC. TO ENG. SPEC. 79-07
18.02.81
BW/
FLOPPY AND 4 TERM. INTERF.
RS232-C SIGNALS. PAGE 3
322610 P C,D,E, M,N
322633 P C,D,E, M,N
3010
13.2.79
Page 3 of 5
A/S NORSK DATA-ELEKTRONIKK
5A34

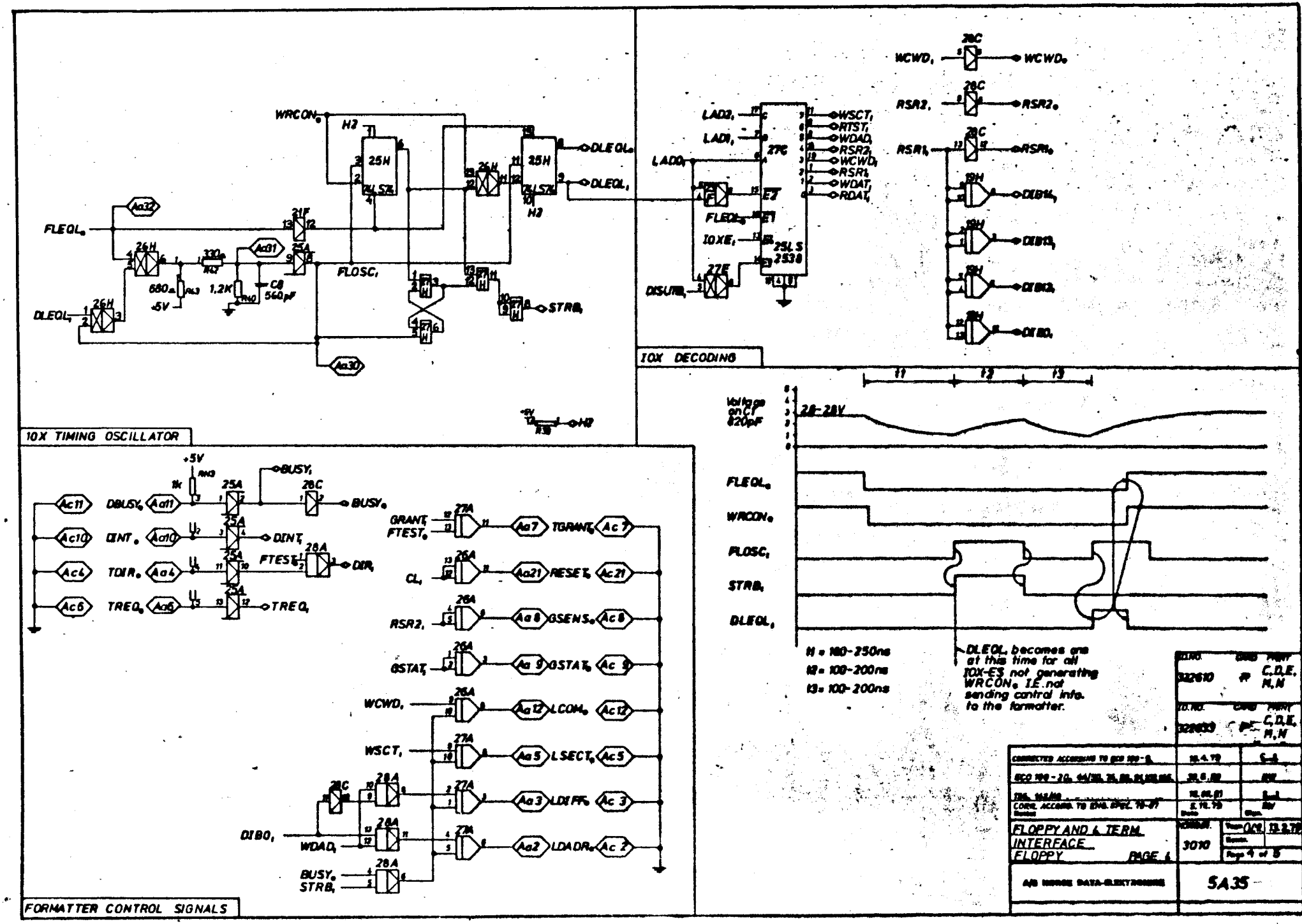
10X TIMING OSCILLATOR
WRCON
H2
25H
DLEOL
FLEOL
Aa32
Aa31
Aa30
26H
330Ω
680Ω
1.2K
C8 560pF
+5V
FLOSC
STRB
IOX DECODING
LAD2
LAD1
LAD0
FLEOL
IOXE
DISUB
27C
27E
25LS 2538
WSCT
RTST
WDAD
RSR2
WCWD
RSR1
WDAT
RDAT
DIB14
DIB13
DIB12
DIB0
FORMATTER CONTROL SIGNALS
DBUSY
DINT
TDIR
TREQ
BUSY
FTEST
GRANT
CL
GSTAT
LCOM
LSECT
LDIFF
LDADR
TGRANT
RESET
GSENS
Ac11
Ac10
Ac4
Ac6
Ac7
Ac21
Ac8
Ac9
Ac12
Ac5
Ac3
Ac2
Voltage on C1 820pF
28-28V
FLEOL
WRCON
FLOSC
STRB
DLEOL
t1 = 180-250ns
t2 = 100-200ns
t3 = 100-200ns
DLEOL becomes one at this time for all IOX-ES not generating WRCON. I.E. not sending control info. to the formatter.
FLOPPY AND 4 TERM. INTERFACE FLOPPY PAGE 4
3010
Page 4 of 8
A/S NORSK DATA-ELEKTRONIKK
5A35

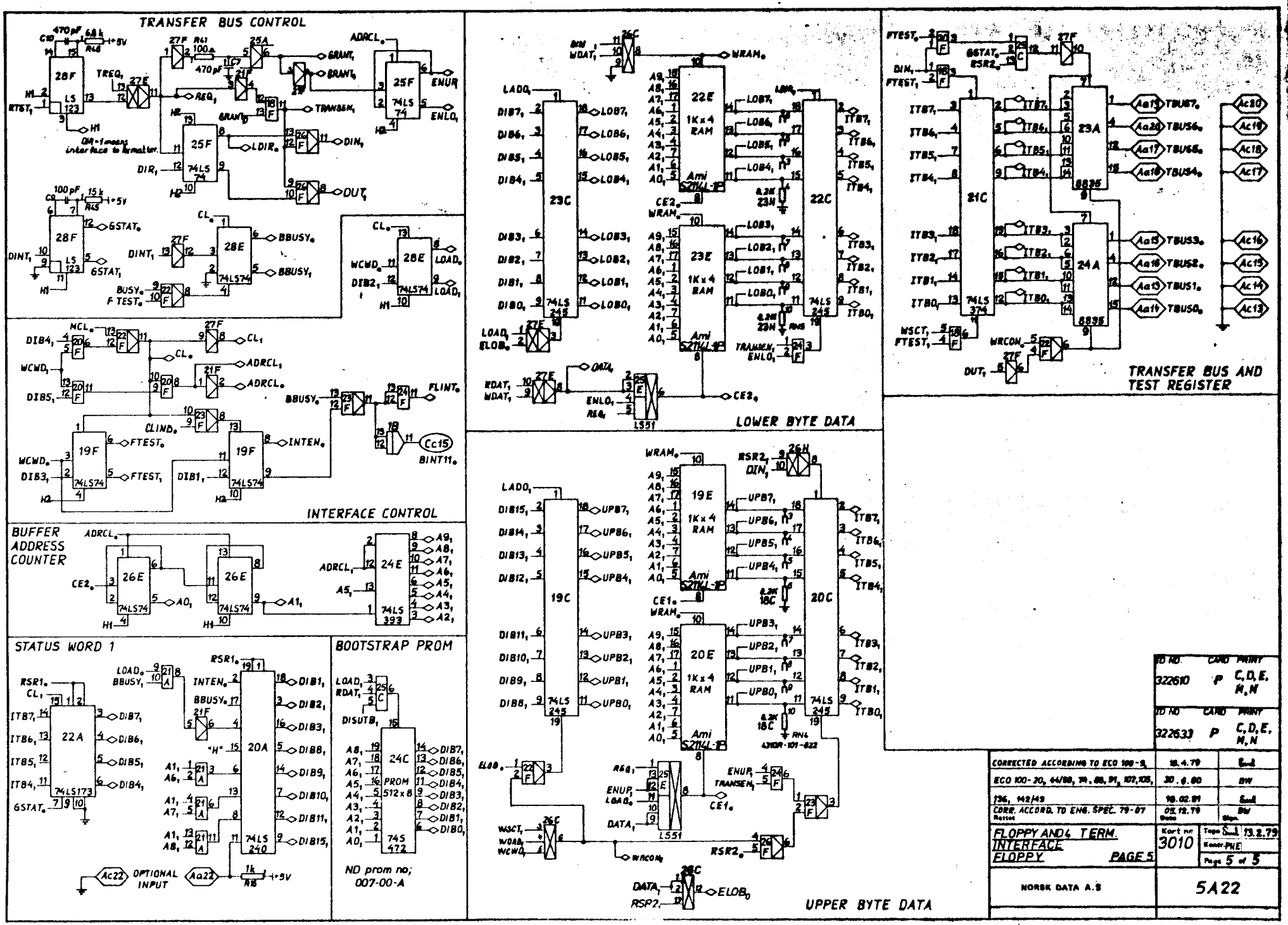
TRANSFER BUS CONTROL
DIR=1 means interface to formatter
INTERFACE CONTROL
BUFFER ADDRESS COUNTER
STATUS WORD 1
OPTIONAL INPUT
BOOTSTRAP PROM
ND prom no; 007-00-A
LOWER BYTE DATA
UPPER BYTE DATA
TRANSFER BUS AND TEST REGISTER
CORRECTED ACCORDING TO ECO 100-9, 18.4.79
ECO 100-20, 44/88, 74, 88, 91, 102, 105, 30.6.80
136, 142/43 18.02.81
CORR. ACCORD. TO ENG. SPEC. 79-07 05.12.79
FLOPPY AND TERM. INTERFACE FLOPPY PAGE 5
Kort nr 3010
Page 5 of 5
NORSK DATA A.S
5A22

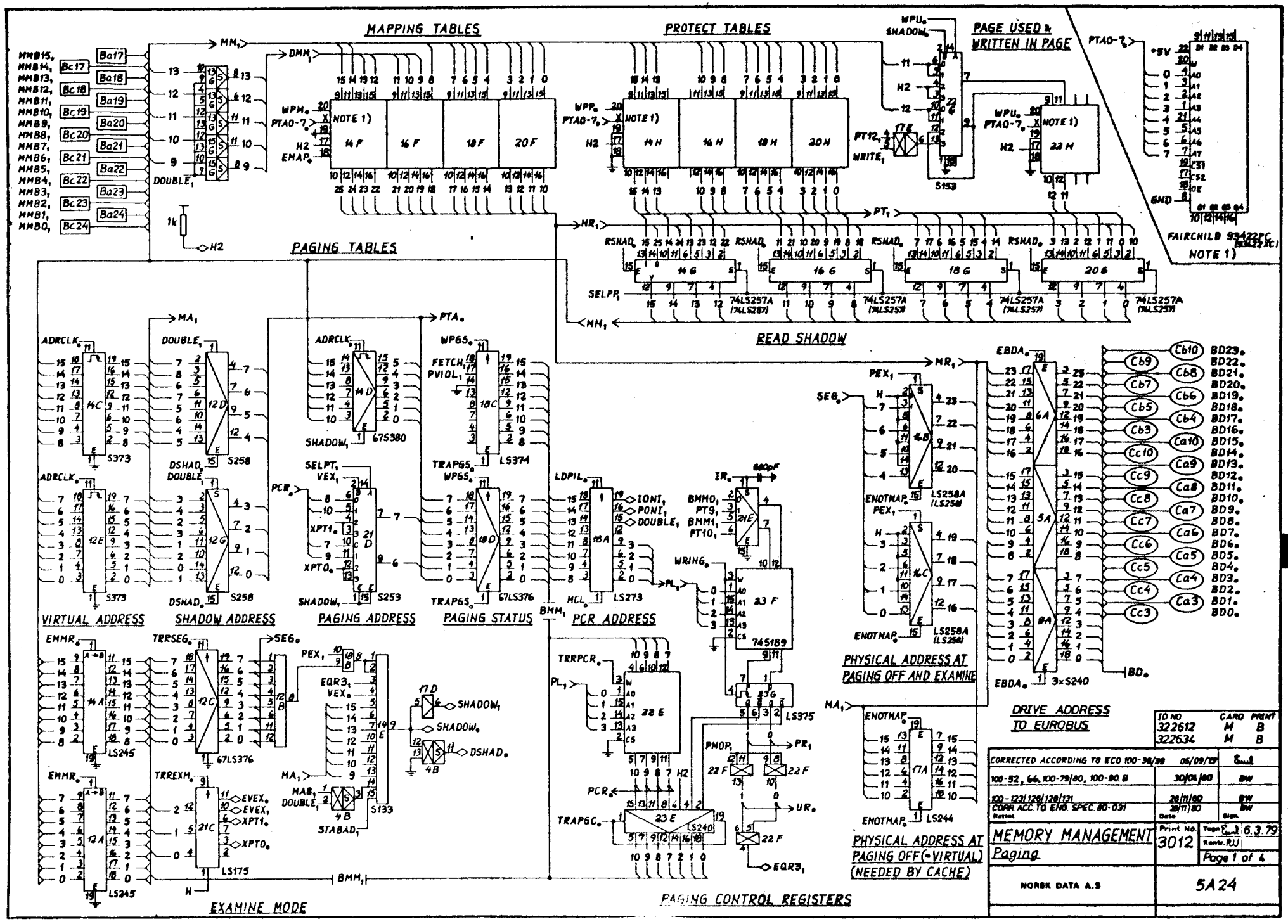
MAPPING TABLES
PROTECT TABLES
PAGE USED & WRITTEN IN PAGE
PAGING TABLES
READ SHADOW
VIRTUAL ADDRESS
SHADOW ADDRESS
PAGING ADDRESS
PAGING STATUS
PCR ADDRESS
PHYSICAL ADDRESS AT PAGING OFF AND EXAMINE
DRIVE ADDRESS TO EUROBUS
EXAMINE MODE
PAGING CONTROL REGISTERS
PHYSICAL ADDRESS AT PAGING OFF (=VIRTUAL) (NEEDED BY CACHE)
FAIRCHILD 93422PC
NOTE 1)
MEMORY MANAGEMENT
Paging
NORSK DATA A.S
5A24
Print No 3012
Page 1 of 4

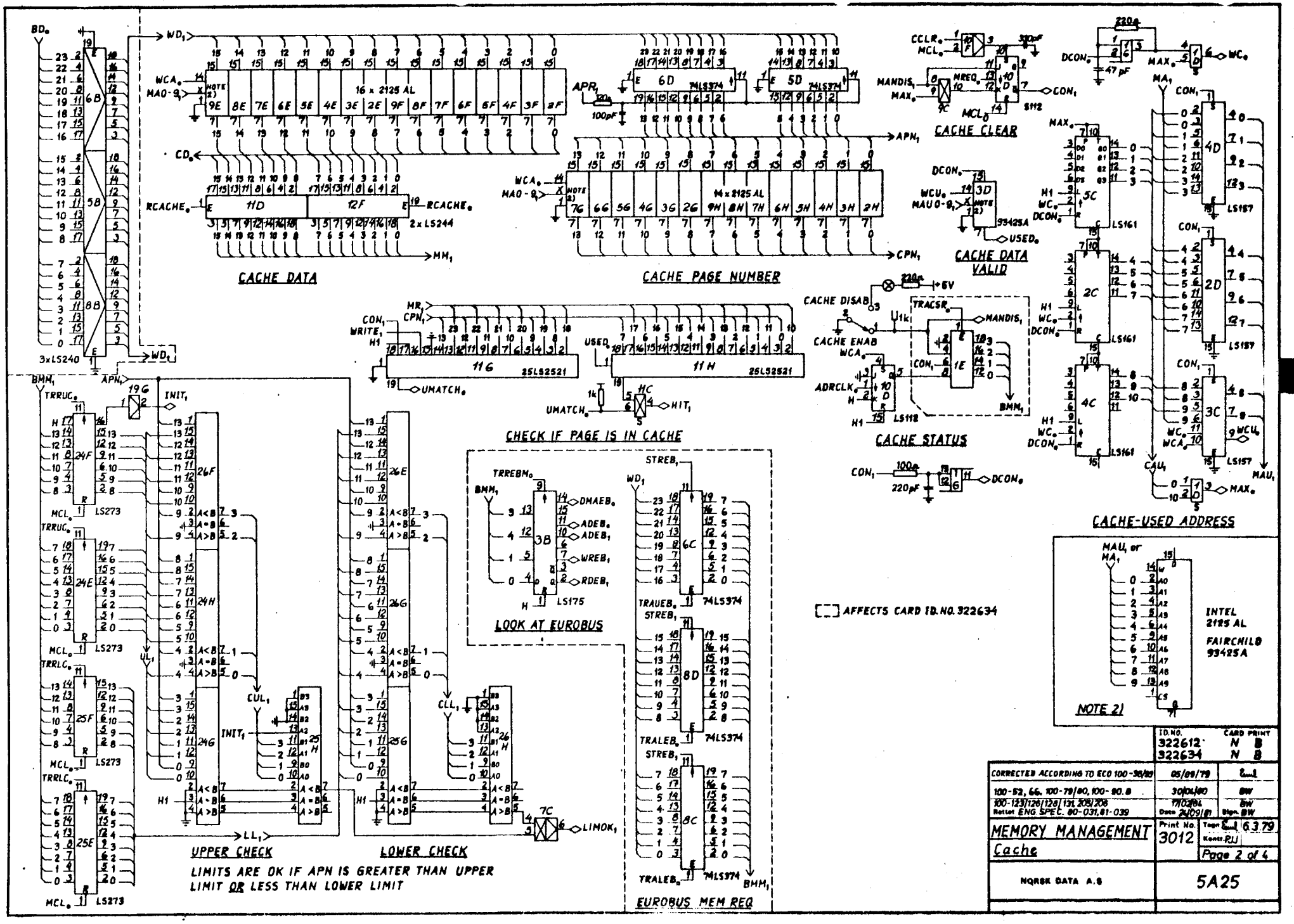
CACHE DATA
CACHE PAGE NUMBER
CACHE CLEAR
CACHE DATA VALID
CACHE STATUS
CACHE-USED ADDRESS
CHECK IF PAGE IS IN CACHE
LOOK AT EUROBUS
UPPER CHECK
LOWER CHECK
EUROBUS MEM REQ
LIMITS ARE OK IF APN IS GREATER THAN UPPER LIMIT OR LESS THAN LOWER LIMIT
AFFECTS CARD ID. NO. 322634
INTEL 2125 AL
FAIRCHILD 93425A
NOTE 2)
MEMORY MANAGEMENT
Cache
Page 2 of 4
NORSK DATA A.S
5A25

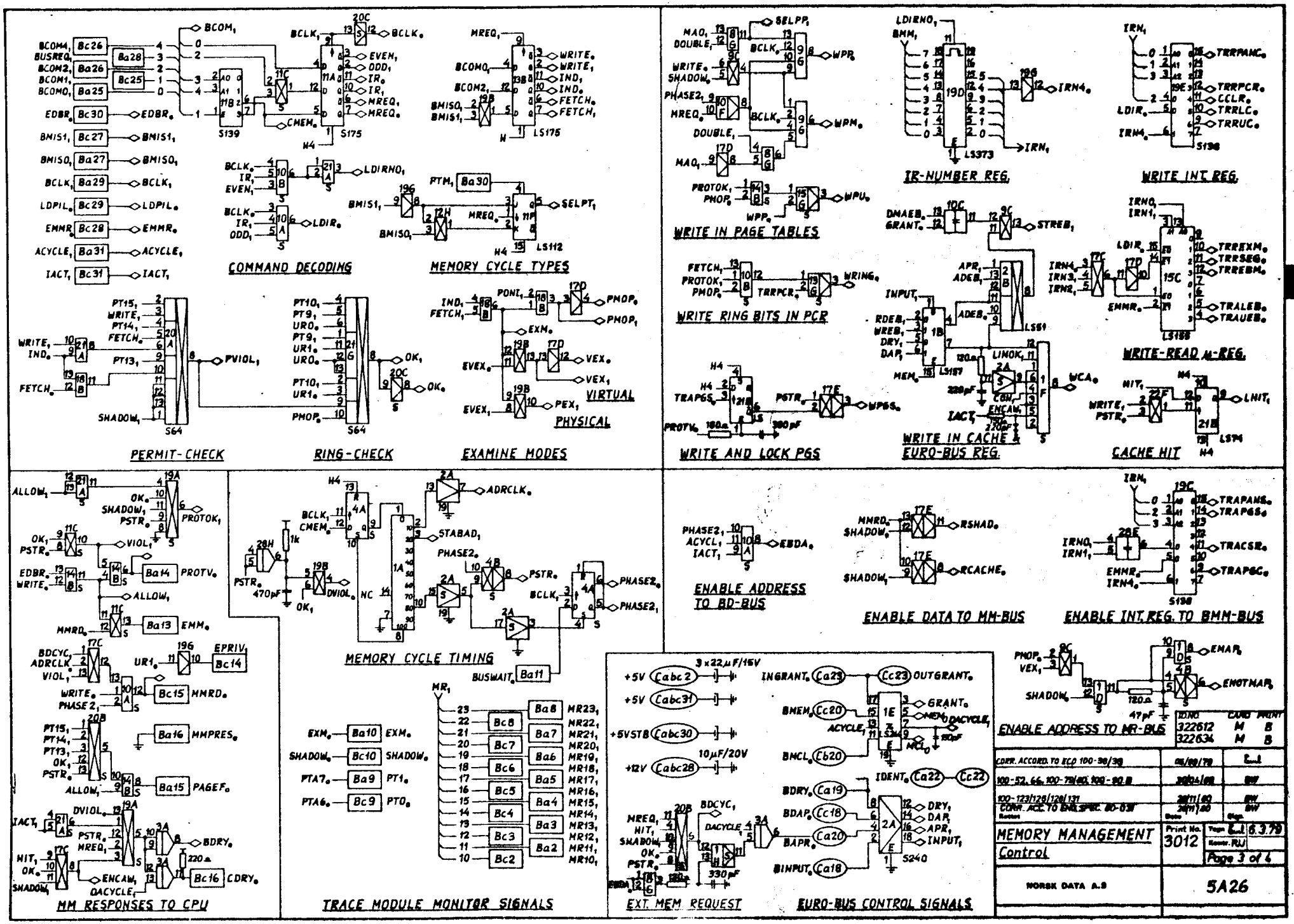
COMMAND DECODING
MEMORY CYCLE TYPES
PERMIT-CHECK
RING-CHECK
EXAMINE MODES
VIRTUAL
PHYSICAL
WRITE IN PAGE TABLES
IR-NUMBER REG.
WRITE INT REG.
WRITE RING BITS IN PCR
WRITE-READ M-REG.
WRITE AND LOCK PGS
WRITE IN CACHE
EURO-BUS REG.
CACHE HIT
ENABLE ADDRESS TO BD-BUS
ENABLE DATA TO MM-BUS
ENABLE INT.REG. TO BMM-BUS
MM RESPONSES TO CPU
MEMORY CYCLE TIMING
TRACE MODULE MONITOR SIGNALS
EXT. MEM REQUEST
EURO-BUS CONTROL SIGNALS
ENABLE ADDRESS TO MR-BUS
MEMORY MANAGEMENT
Control
NORSK DATA A.S
Page 3 of 4
5A26

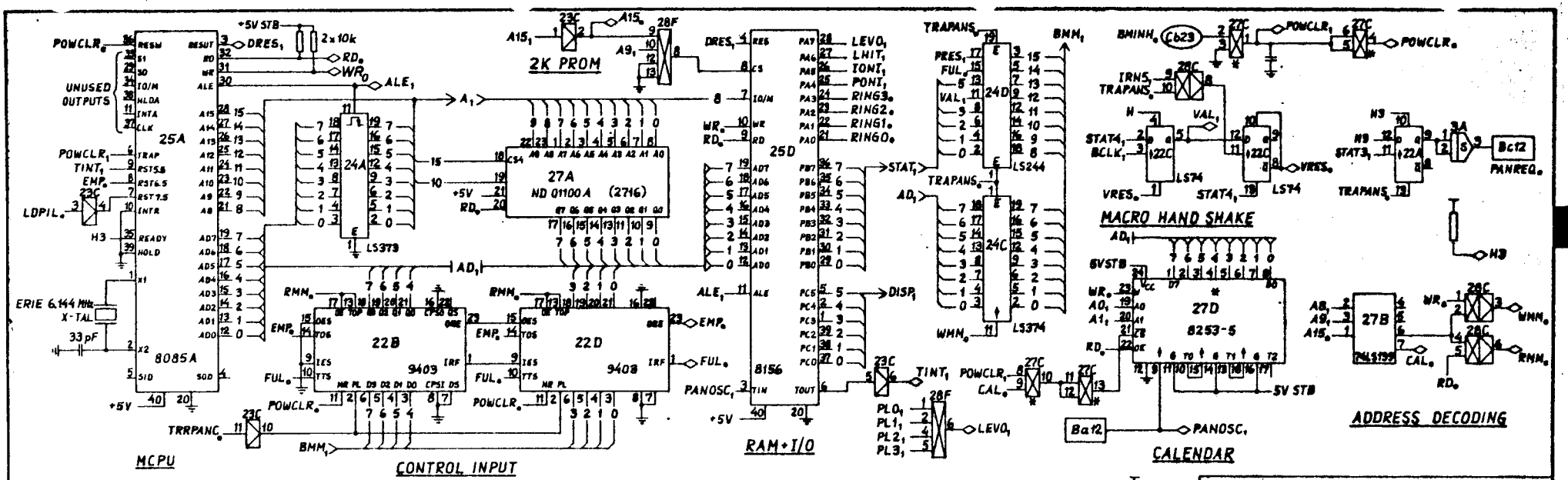

IDNO	CARD	PRINT
322612	M	B
322634	M	B

CORRECTED ACCORDING TO ECB 100-38/79	05/09/79	B.J
100-52, 66, 100-70/80, 100-80 B	30/04/80	BW
100-123/126/128/131	28/11/80	BW
CORR. ACC. TO ENG. SPEC 80-831	28/11/80	BW
Revision	Date	Sign.

MEMORY MANAGEMENT
Display

Print No. 3012

Tegn. B.J 6.3.79
Kontr. RJ

Page 4 of 4

NORSK DATA A.S

5A27

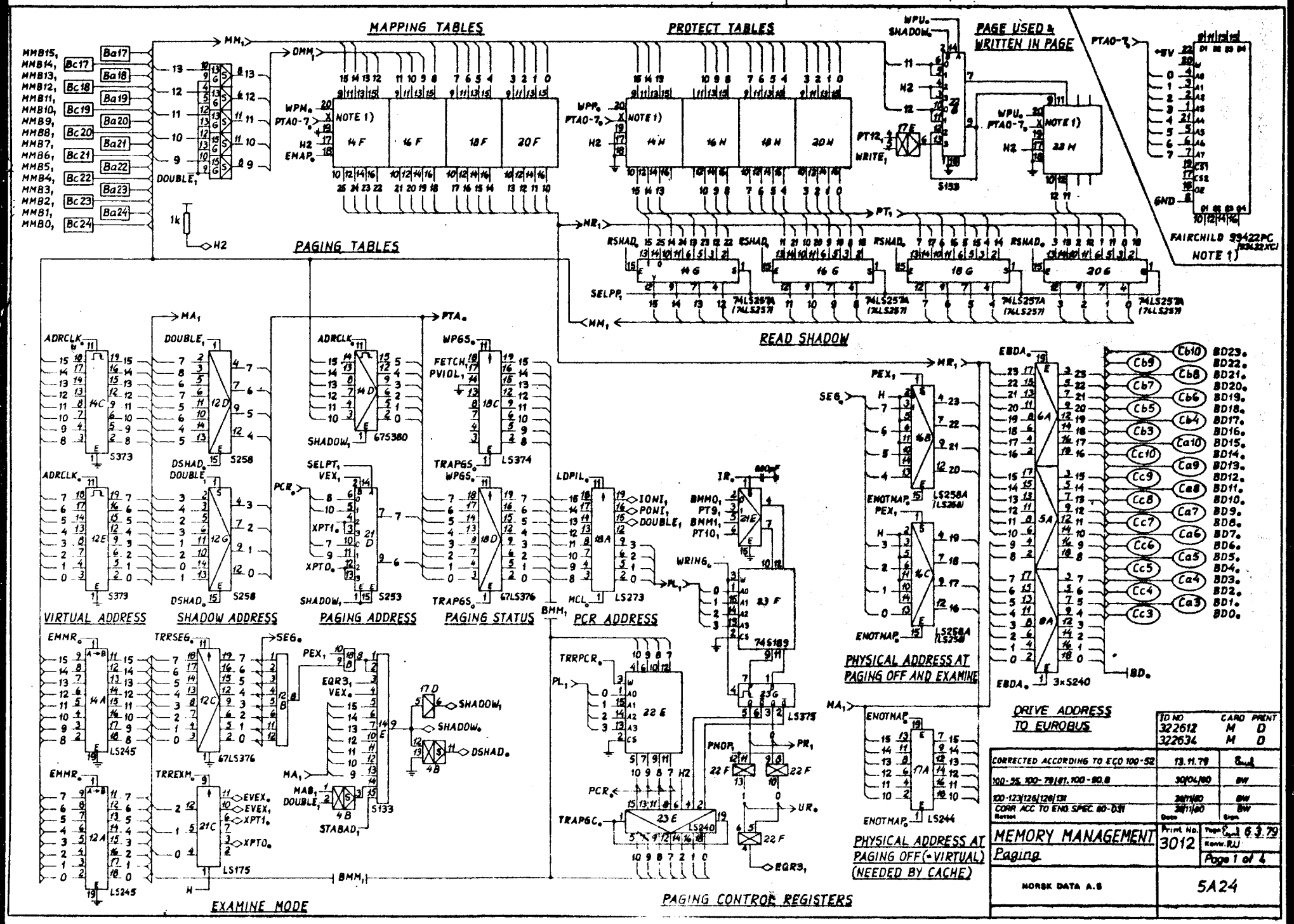
MAPPING TABLES
PROTECT TABLES
PAGE USED & WRITTEN IN PAGE
PAGING TABLES
READ SHADOW
FAIRCHILD 93422PC
NOTE 1)
VIRTUAL ADDRESS
SHADOW ADDRESS
PAGING ADDRESS
PAGING STATUS
PCR ADDRESS
PHYSICAL ADDRESS AT PAGING OFF AND EXAMINE
DRIVE ADDRESS TO EUROBUS
EXAMINE MODE
PAGING CONTROL REGISTERS
PHYSICAL ADDRESS AT PAGING OFF (=VIRTUAL) (NEEDED BY CACHE)
MEMORY MANAGEMENT
Paging
NORSK DATA A.S
5A24
Page 1 of 4

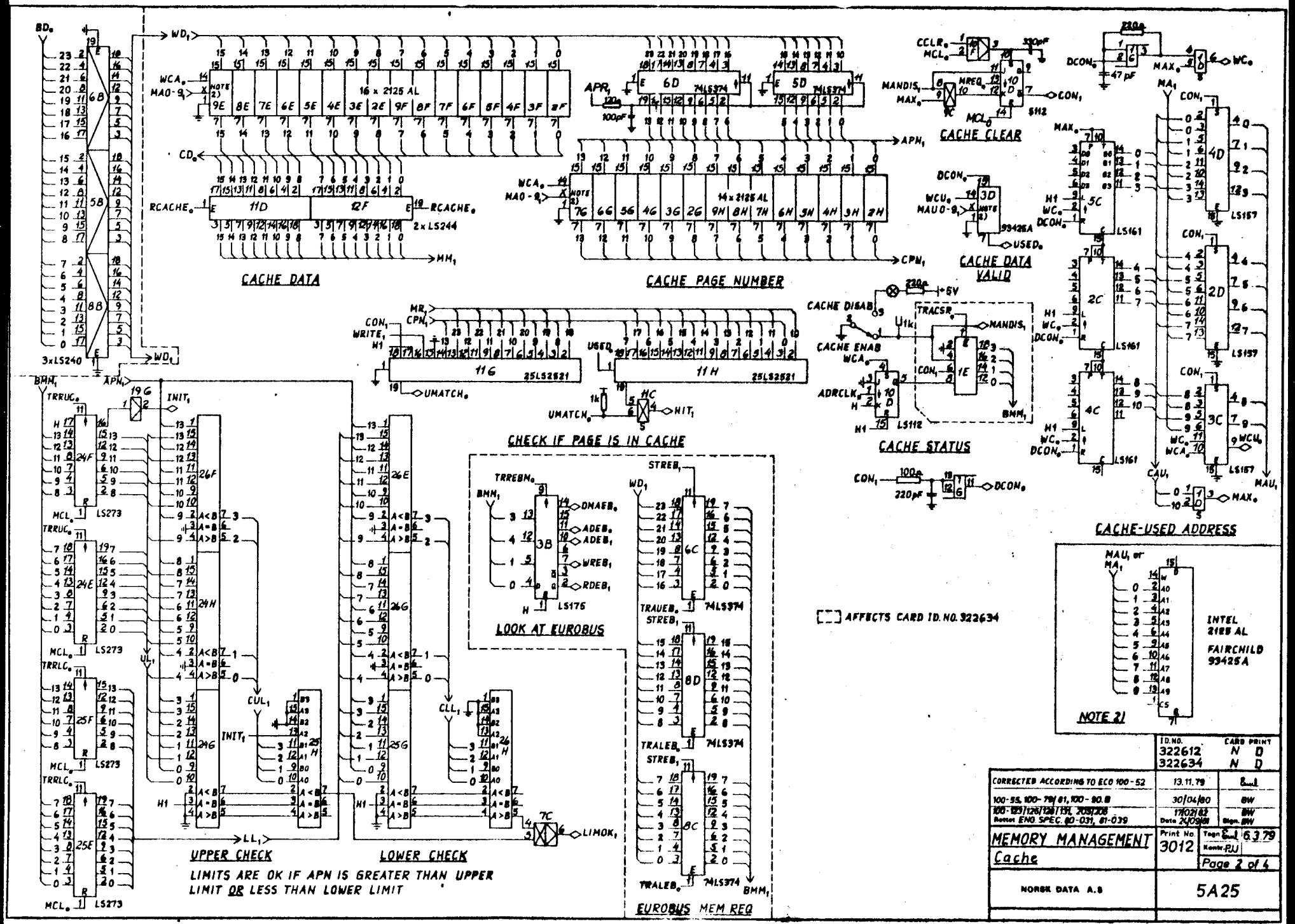
CACHE DATA
16 x 2125 AL
2 x LS244
CACHE PAGE NUMBER
14 x 2125 AL
CACHE CLEAR
CACHE DATA VALID
CACHE STATUS
CACHE-USED ADDRESS
CHECK IF PAGE IS IN CACHE
LOOK AT EUROBUS
UPPER CHECK
LOWER CHECK
LIMITS ARE OK IF APN IS GREATER THAN UPPER LIMIT OR LESS THAN LOWER LIMIT
EUROBUS MEM REQ
AFFECTS CARD ID. NO. 322634
INTEL 2125 AL
FAIRCHILD 93425A
NOTE 2)
MEMORY MANAGEMENT
Cache
Print No. 3012
Page 2 of 4
NORSK DATA A.S
5A25
ID.NO. 322612 N D
322634 N D
CORRECTED ACCORDING TO ECO 100-52 13.11.79
100-55, 100-79/81, 100-90.B 30/04/80 BW
100-125/126/128/131, 205/208 17/02/82 BW
Rettet ENO SPEC. 80-031, 81-039 Date 24/09/81 Sign. BW

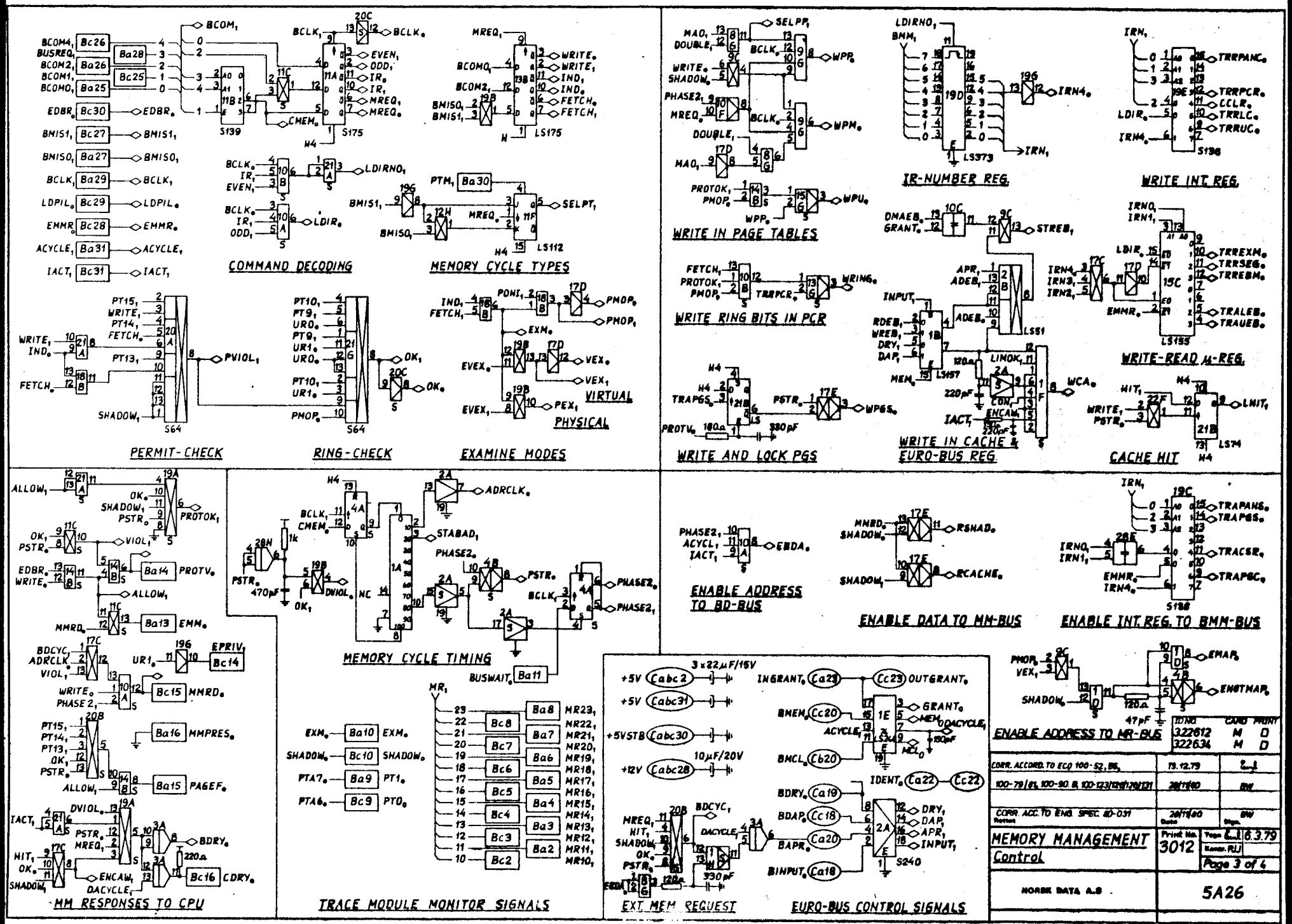
COMMAND DECODING
MEMORY CYCLE TYPES
WRITE IN PAGE TABLES
IR-NUMBER REG.
WRITE INT. REG.
WRITE RING BITS IN PCR
WRITE-READ µ-REG.
PERMIT-CHECK
RING-CHECK
EXAMINE MODES
VIRTUAL
PHYSICAL
WRITE AND LOCK PGS
WRITE IN CACHE & EURO-BUS REG.
CACHE HIT
MM RESPONSES TO CPU
MEMORY CYCLE TIMING
TRACE MODULE MONITOR SIGNALS
EXT. MEM REQUEST
EURO-BUS CONTROL SIGNALS
ENABLE ADDRESS TO BD-BUS
ENABLE DATA TO MM-BUS
ENABLE INT. REG. TO BMM-BUS
ENABLE ADDRESS TO MR-BUS
MEMORY MANAGEMENT
Control
NORSK DATA A.S
5A26
Page 3 of 4

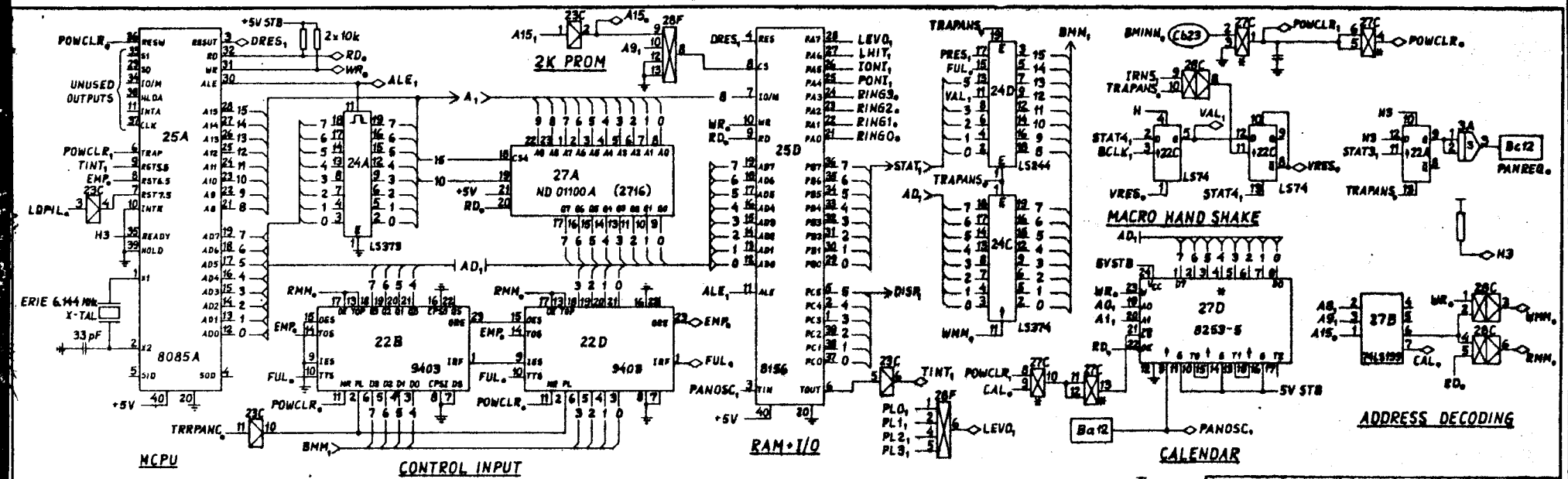

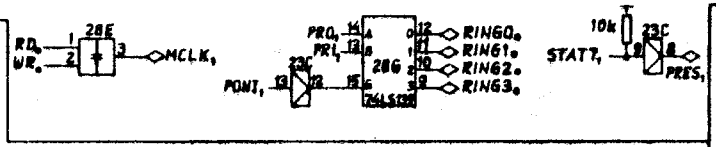

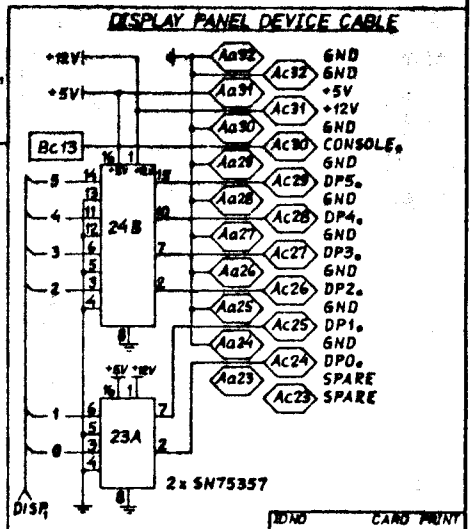

	IDNO	CARD PRINT
	322612	M D
	322634	M D
CORRECTED ACCORDING TO ECO 100-52	13.11.79	Sund
100-55, 100-79/81, 100-80 B	30/06/80	BW
100-123/126/128/131	29/11/80	BW
CORR ACC. TO ENG SPEC 80-031	29/11/80	BW
Rettet	Dato	Sign.
MEMORY MANAGEMENT	Print No. 3012	Tegn. Sund 6.3.79
Display		Konstr. PJJ
		Page 4 of 4
NORSK DATA A.S	5A27	

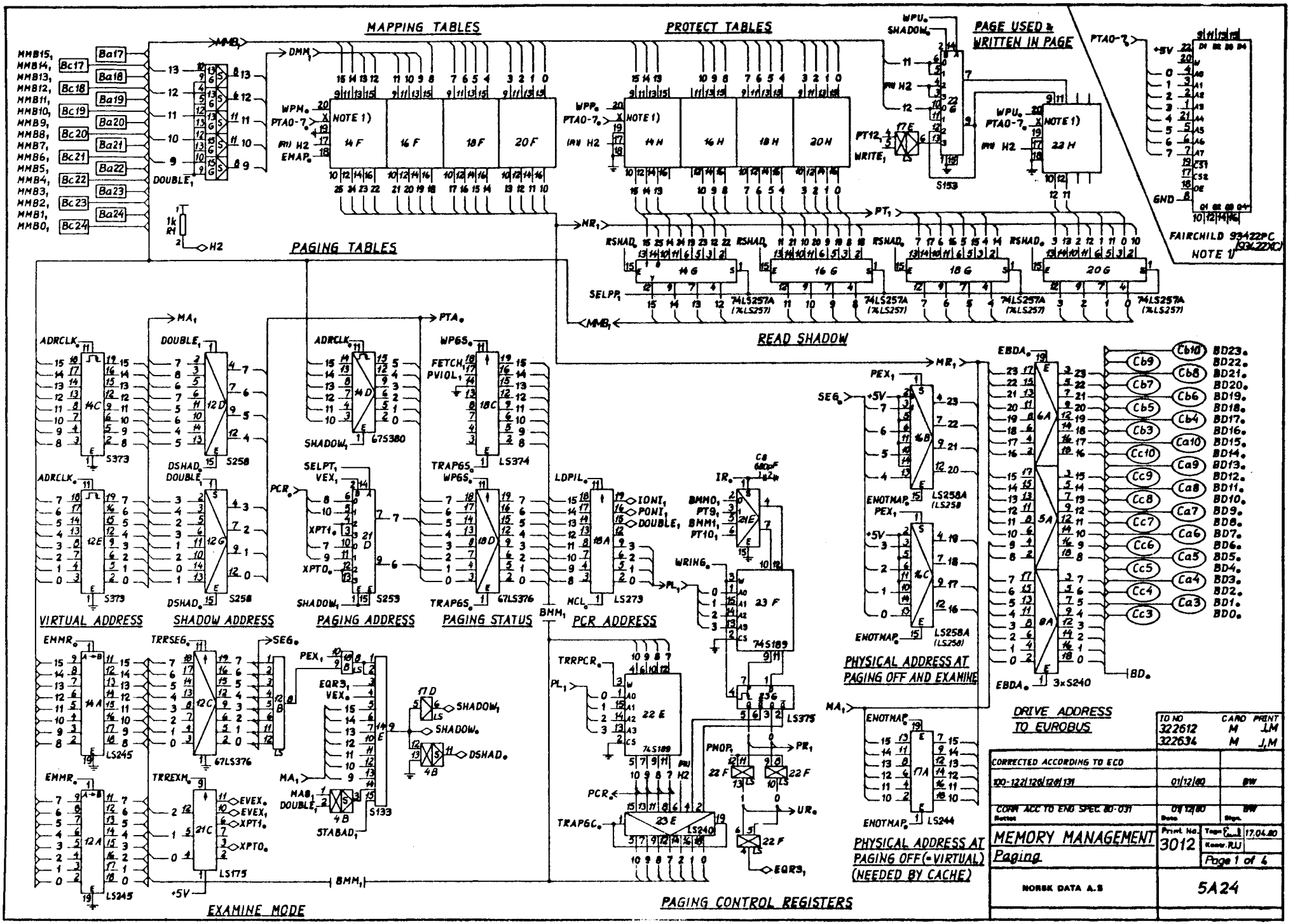
MAPPING TABLES
PROTECT TABLES
PAGE USED & WRITTEN IN PAGE
PAGING TABLES
READ SHADOW
VIRTUAL ADDRESS
SHADOW ADDRESS
PAGING ADDRESS
PAGING STATUS
PCR ADDRESS
PHYSICAL ADDRESS AT PAGING OFF AND EXAMINE
PHYSICAL ADDRESS AT PAGING OFF (=VIRTUAL) (NEEDED BY CACHE)
DRIVE ADDRESS TO EUROBUS
EXAMINE MODE
PAGING CONTROL REGISTERS
FAIRCHILD 93422PC (93L22PC)
NOTE 1)
MEMORY MANAGEMENT
Paging
3012
Page 1 of 4
NORSK DATA A.S
5A24
CORRECTED ACCORDING TO ECO
CORR ACC TO ENG SPEC 80-031
17.04.80

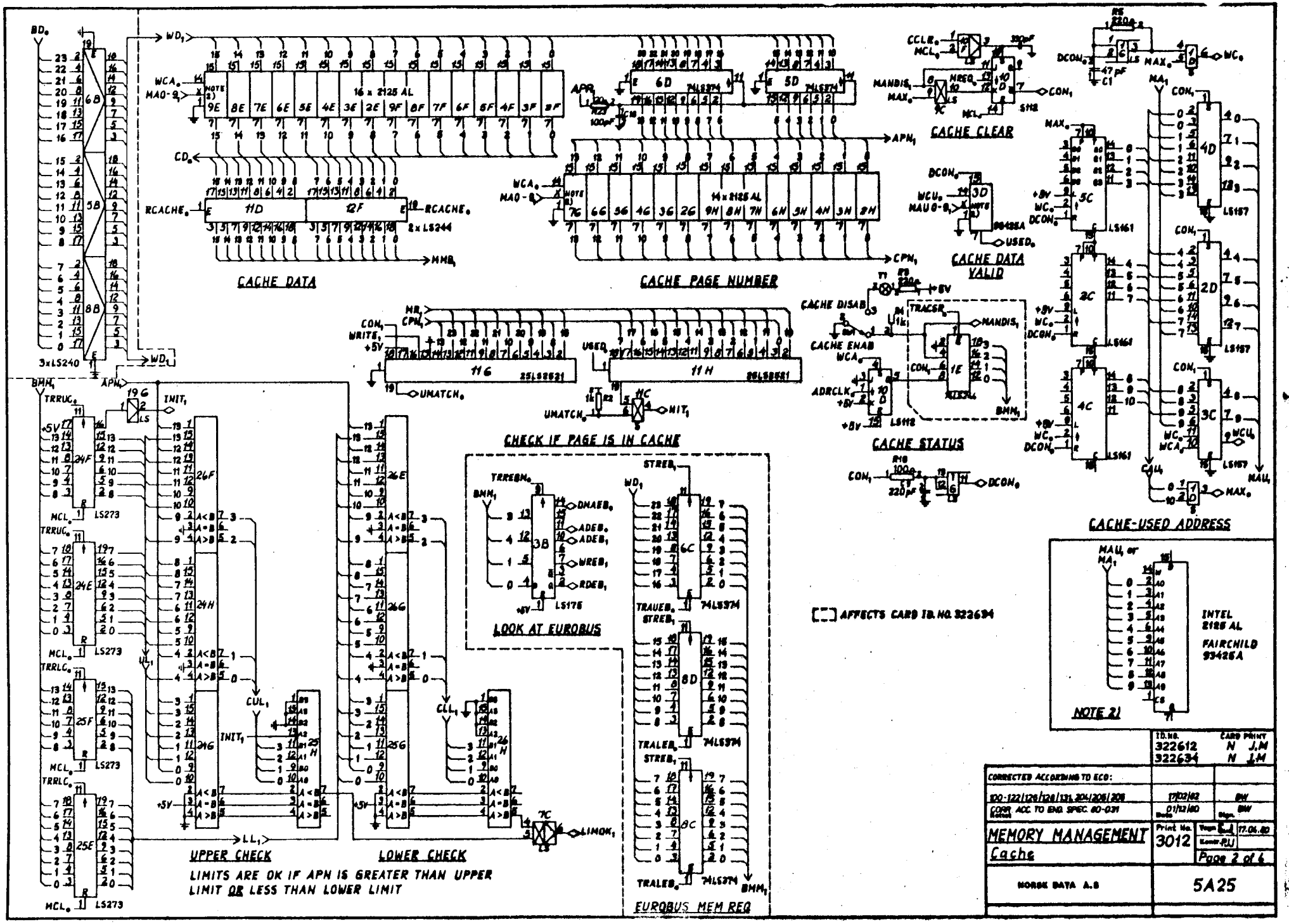
CACHE DATA
16 x 2125 AL
2 x LS244
3 x LS240
CACHE PAGE NUMBER
14 x 2125 AL
CACHE CLEAR
CACHE DATA VALID
CACHE STATUS
CACHE-USED ADDRESS
CHECK IF PAGE IS IN CACHE
LOOK AT EUROBUS
UPPER CHECK
LOWER CHECK
LIMITS ARE OK IF APN IS GREATER THAN UPPER LIMIT OR LESS THAN LOWER LIMIT
EUROBUS MEM REQ
AFFECTS CARD ID. NO. 322634
INTEL 2125 AL
FAIRCHILD 93425A
NOTE 2)
MEMORY MANAGEMENT
Cache
Print No. 3012
Page 2 of 6
NORSK DATA A.S
5A25
322612
322634

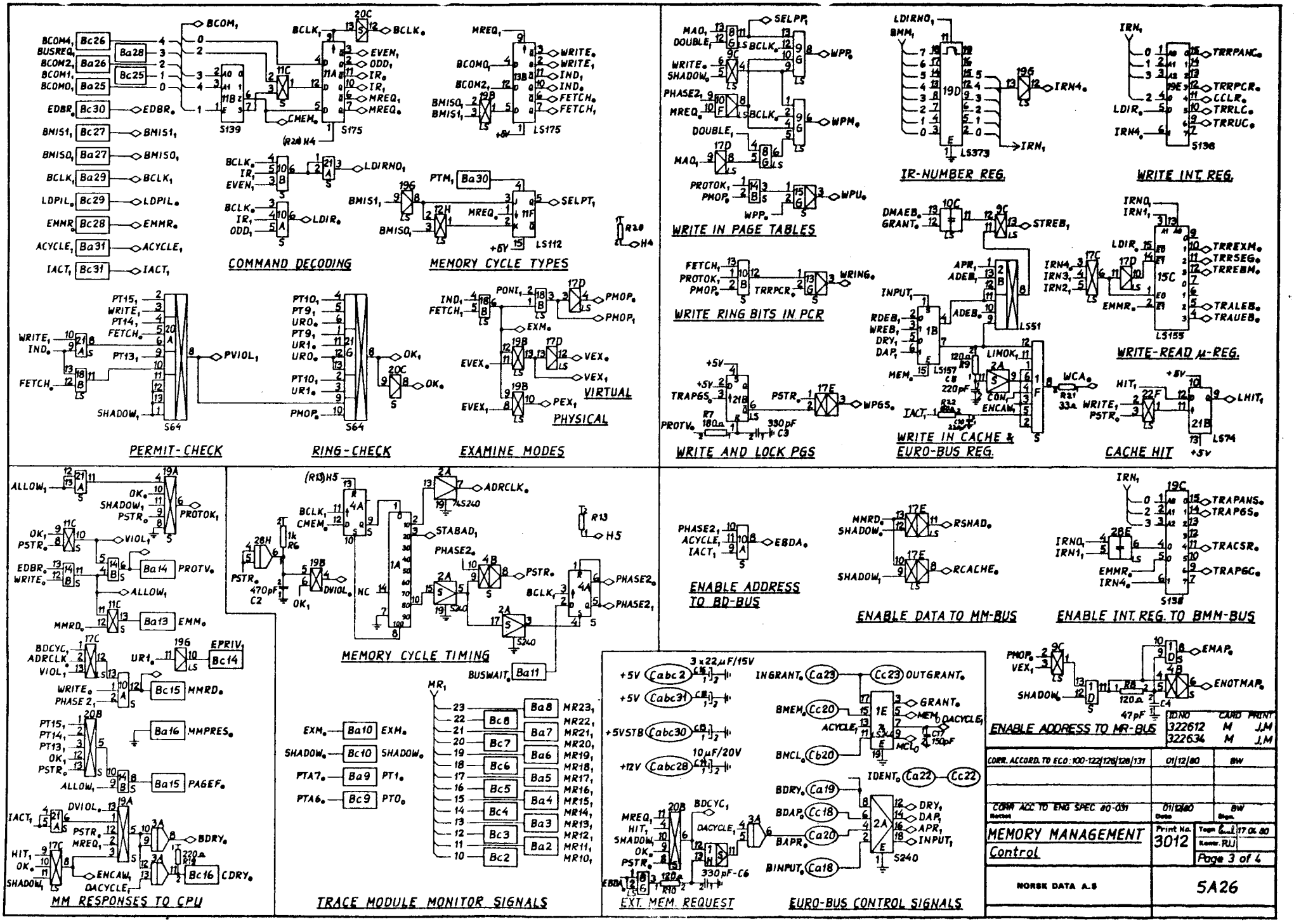
COMMAND DECODING
MEMORY CYCLE TYPES
WRITE IN PAGE TABLES
IR-NUMBER REG.
WRITE INT. REG.
WRITE RING BITS IN PCR
WRITE-READ µ-REG.
WRITE AND LOCK PGS
WRITE IN CACHE & EURO-BUS REG.
CACHE HIT
PERMIT-CHECK
RING-CHECK
EXAMINE MODES
VIRTUAL
PHYSICAL
ENABLE ADDRESS TO BD-BUS
ENABLE DATA TO MM-BUS
ENABLE INT. REG. TO BMM-BUS
MEMORY CYCLE TIMING
MM RESPONSES TO CPU
TRACE MODULE MONITOR SIGNALS
EXT. MEM. REQUEST
EURO-BUS CONTROL SIGNALS
ENABLE ADDRESS TO MR-BUS
MEMORY MANAGEMENT
Control
NORSK DATA A.S
5A26
Page 3 of 4

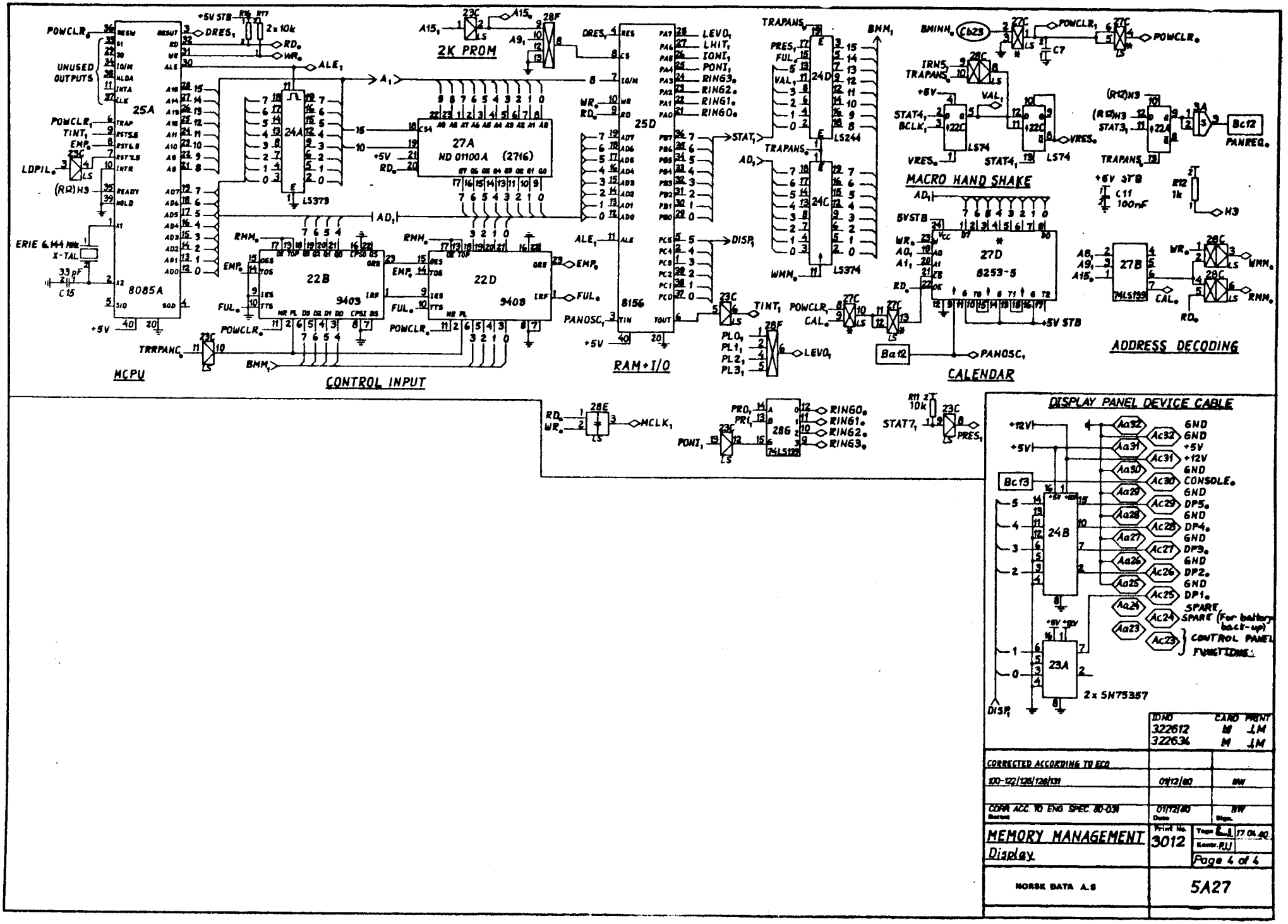
MCPU
8085A
25A
UNUSED OUTPUTS
CONTROL INPUT
22B
9403
22D
9403
24A
LS373
2K PROM
27A
ND 01100A (2716)
RAM+I/O
25D
8156
24D
LS244
24C
LS374
MACRO HAND SHAKE
27D
8253-5
CALENDAR
ADDRESS DECODING
27B
74LS139
DISPLAY PANEL DEVICE CABLE
24B
23A
2 x SN75357
GND
+5V
+12V
CONSOLE.
DP5.
DP4.
DP3.
DP2.
DP1.
SPARE
SPARE (For battery back-up)
CONTROL PANEL FUNCTIONS
IDNO
322612
322634
CARD PRINT
CORRECTED ACCORDING TO ECO
100-122/126/128/131
01/12/80
BW
CORR ACC. TO ENG SPEC. 80-031
01/12/80
BW
MEMORY MANAGEMENT
Display
Print No.
3012
Page 4 of 4
NORSK DATA A.S
5A27

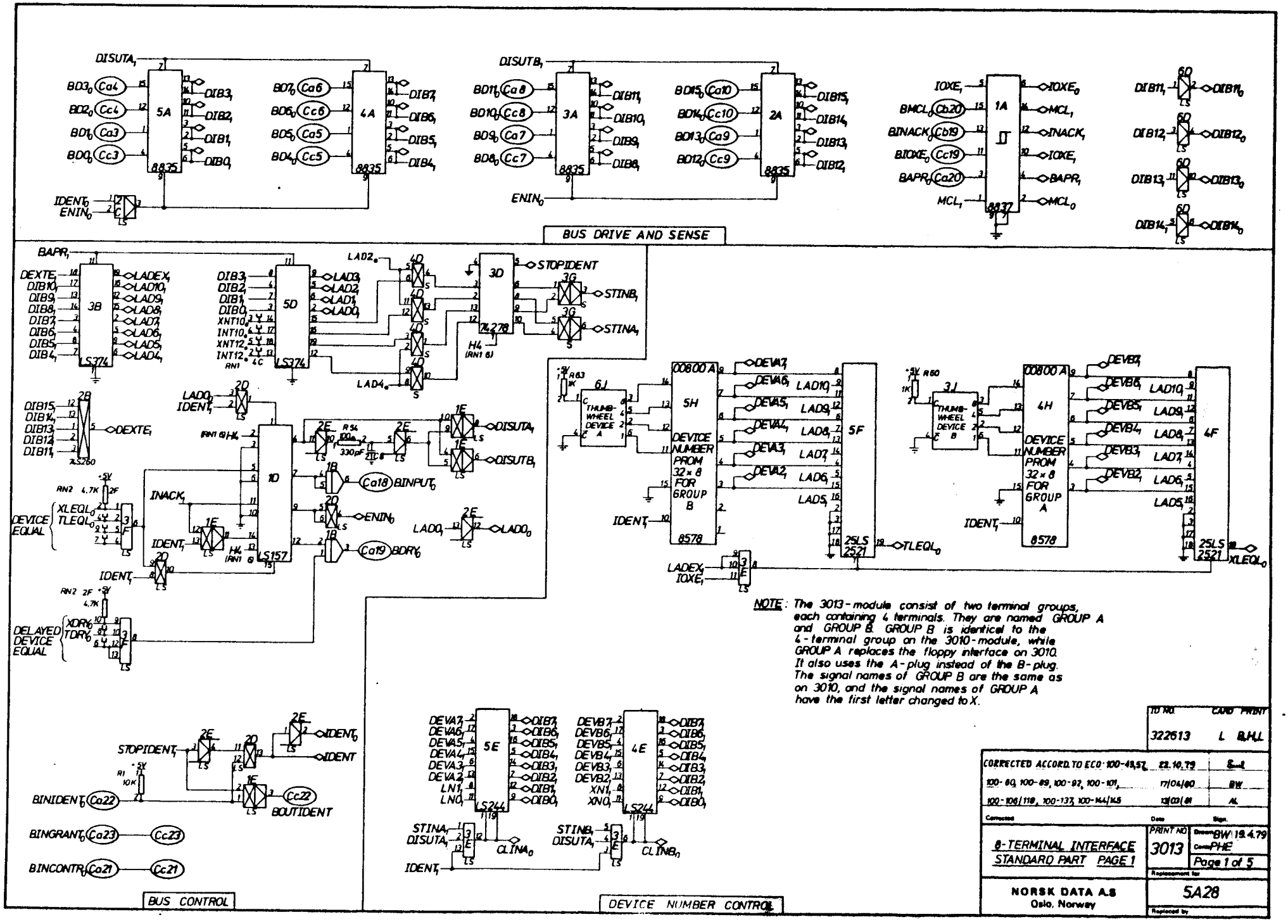

NOTE: The 3013-module consist of two terminal groups, each containing 4 terminals. They are named GROUP A and GROUP B. GROUP B is identical to the 4-terminal group on the 3010-module, while GROUP A replaces the floppy interface on 3010. It also uses the A-plug instead of the B-plug. The signal names of GROUP B are the same as on 3010, and the signal names of GROUP A have the first letter changed to X.

ID NO.	CARD PRINT
322613	L BJLL

CORRECTED ACCORD. TO ECO 100-48,57,	22.10.79	[illegible]
100-80, 100-89, 100-92, 100-101,	17/04/80	BW
100-106/118, 100-137, 100-144/145	13/03/81	AL
Corrected	Date	Sign.

8-TERMINAL INTERFACE STANDARD PART PAGE 1

PRINT NO 3013

Drawn BW 19.4.79
Conf PHE

Page 1 of 5

Replacement for

NORSK DATA A.S
Oslo, Norway

5A28

Replaced by

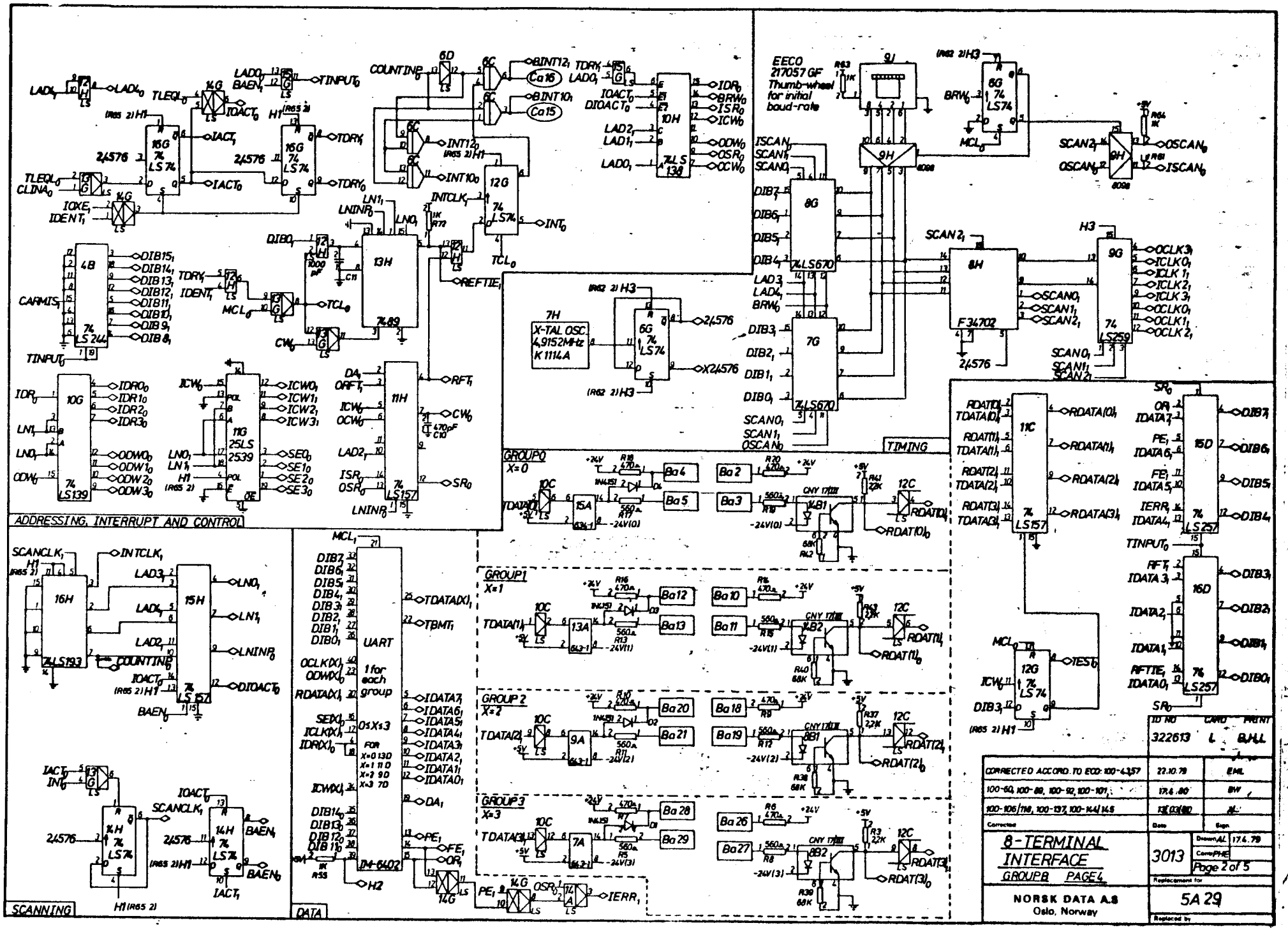
ADDRESSING, INTERRUPT AND CONTROL
SCANNING
DATA
GROUP0 X=0
GROUP1 X=1
GROUP2 X=2
GROUP3 X=3
TIMING
EECO 217057 GF Thumb-wheel for initial baud-rate
X-TAL OSC. 4,9152MHz K 1114A
UART 1 for each group
IM-6402
8-TERMINAL INTERFACE
GROUP8 PAGE4
NORSK DATA A.S
Oslo, Norway
3013
Page 2 of 5
5A 29
322613
CORRECTED ACCORD. TO ECO: 100-4357
100-60, 100-88, 100-92, 100-101
100-106/118, 100-137, 100-144/145

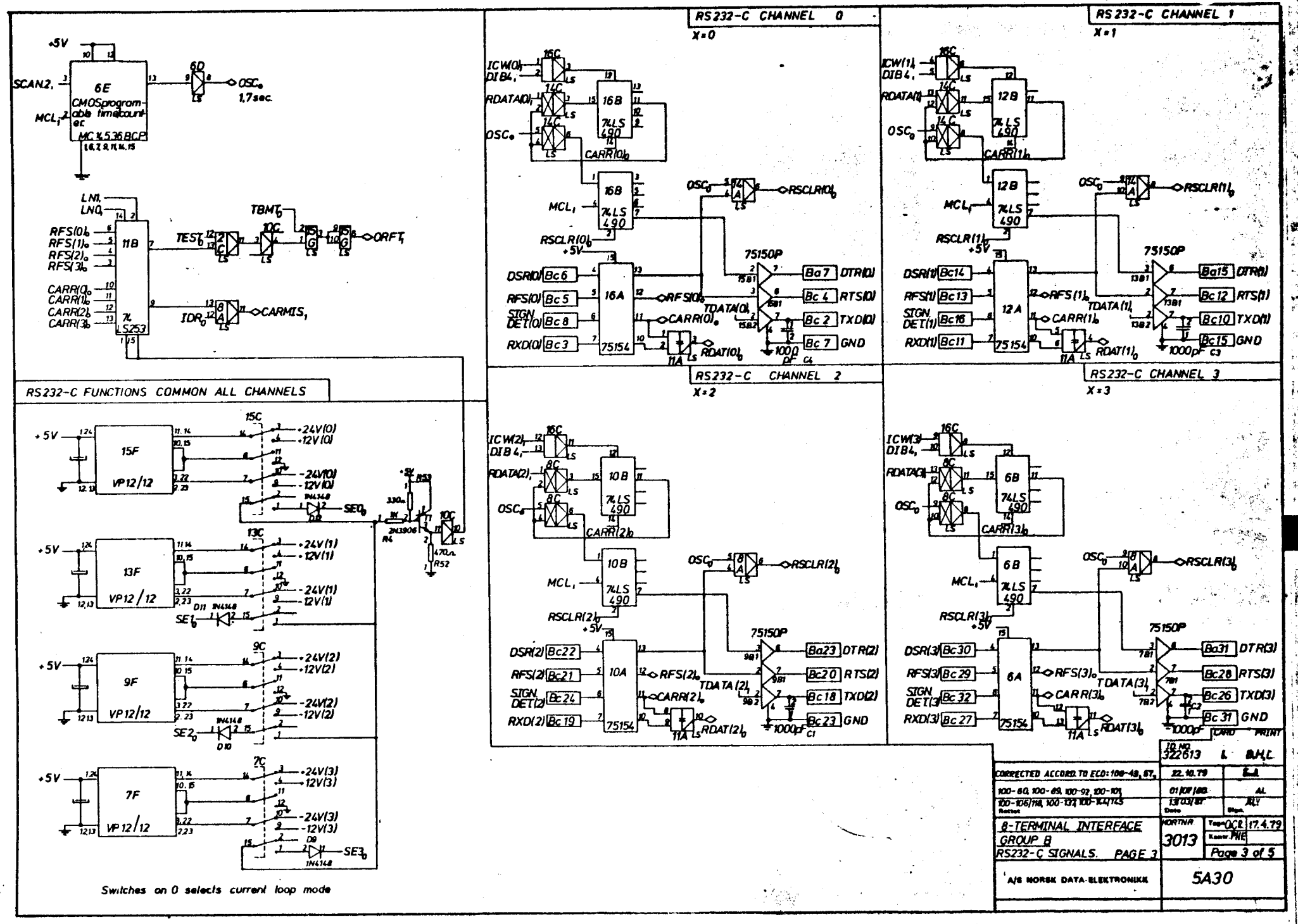
RS232-C CHANNEL 0
X=0
RS232-C CHANNEL 1
X=1
RS232-C CHANNEL 2
X=2
RS232-C CHANNEL 3
X=3
RS232-C FUNCTIONS COMMON ALL CHANNELS
+5V
SCAN2,
6E
CMOSprogram-
able timecount-
er
MC 14536BCP
MCL1
6D
OSC0
1,7sec.
LN1,
LN0,
11B
RFS(0)0
RFS(1)0
RFS(2)0
RFS(3)0
CARR(0)0
CARR(1)0
CARR(2)0
CARR(3)0
74 LS253
TEST0
TBM0
10C
ORFT1
IDR0
CARMIS1
ICW(0),
DIB4,
RDATA(0),
OSC0
16C
14C
16B
74LS 490
CARR(0)0
MCL1
RSCLR(0)0
16A
DSR(0) Bc6
RFS(0) Bc5
SIGN DET(0) Bc8
RXD(0) Bc3
75154
RFS(0)0
CARR(0)0
11A
RDAT(0)0
75150P
TDATA(0)
Ba7 DTR(0)
Bc4 RTS(0)
Bc2 TXD(0)
Bc7 GND
100pF C4
ICW(1),
DIB4,
RDATA(1)
12B
CARR(1)0
RSCLR(1)0
12A
DSR(1) Bc14
RFS(1) Bc13
SIGN DET(1) Bc16
RXD(1) Bc11
RFS(1)0
CARR(1)0
RDAT(1)0
TDATA(1)
Ba15 DTR(1)
Bc12 RTS(1)
Bc10 TXD(1)
Bc15 GND
1000pF C3
ICW(2),
DIB4,
RDATA(2),
8C
10B
CARR(2)0
RSCLR(2)0
10A
DSR(2) Bc22
RFS(2) Bc21
SIGN DET(2) Bc24
RXD(2) Bc19
RFS(2)0
CARR(2)0
RDAT(2)0
TDATA(2)
Ba23 DTR(2)
Bc20 RTS(2)
Bc18 TXD(2)
Bc23 GND
1000pF C1
ICW(3),
DIB4,
RDATA(3)
6B
CARR(3)0
RSCLR(3)0
6A
DSR(3) Bc30
RFS(3) Bc29
SIGN DET(3) Bc32
RXD(3) Bc27
RFS(3)0
CARR(3)0
RDAT(3)0
TDATA(3)
Ba31 DTR(3)
Bc28 RTS(3)
Bc26 TXD(3)
Bc31 GND
1000pF C2
15F
VP12/12
15C
+24V(0)
+12V(0)
-24V(0)
-12V(0)
SE0
13F
13C
+24V(1)
+12V(1)
-24V(1)
-12V(1)
SE1
D11 1N4148
9F
9C
+24V(2)
+12V(2)
-24V(2)
-12V(2)
SE2
D10
7F
7C
+24V(3)
+12V(3)
-24V(3)
-12V(3)
SE3
D9
1N4148
R53
330Ω
2N3906
R4
470Ω
R52
Switches on 0 selects current loop mode
CARD PRINT
10 NO
322613 L B.H.L
CORRECTED ACCORD. TO ECO: 100-48, 87, 22.10.79
100-60, 100-69, 100-92, 100-101, 01/07/80
100-106/114, 100-137, 100-144/125, 13/03/81
8-TERMINAL INTERFACE
GROUP B
RS232-C SIGNALS. PAGE 3
KORTNR
3013
17.4.79
Page 3 of 5
A/S NORSK DATA-ELEKTRONIKK
5A30

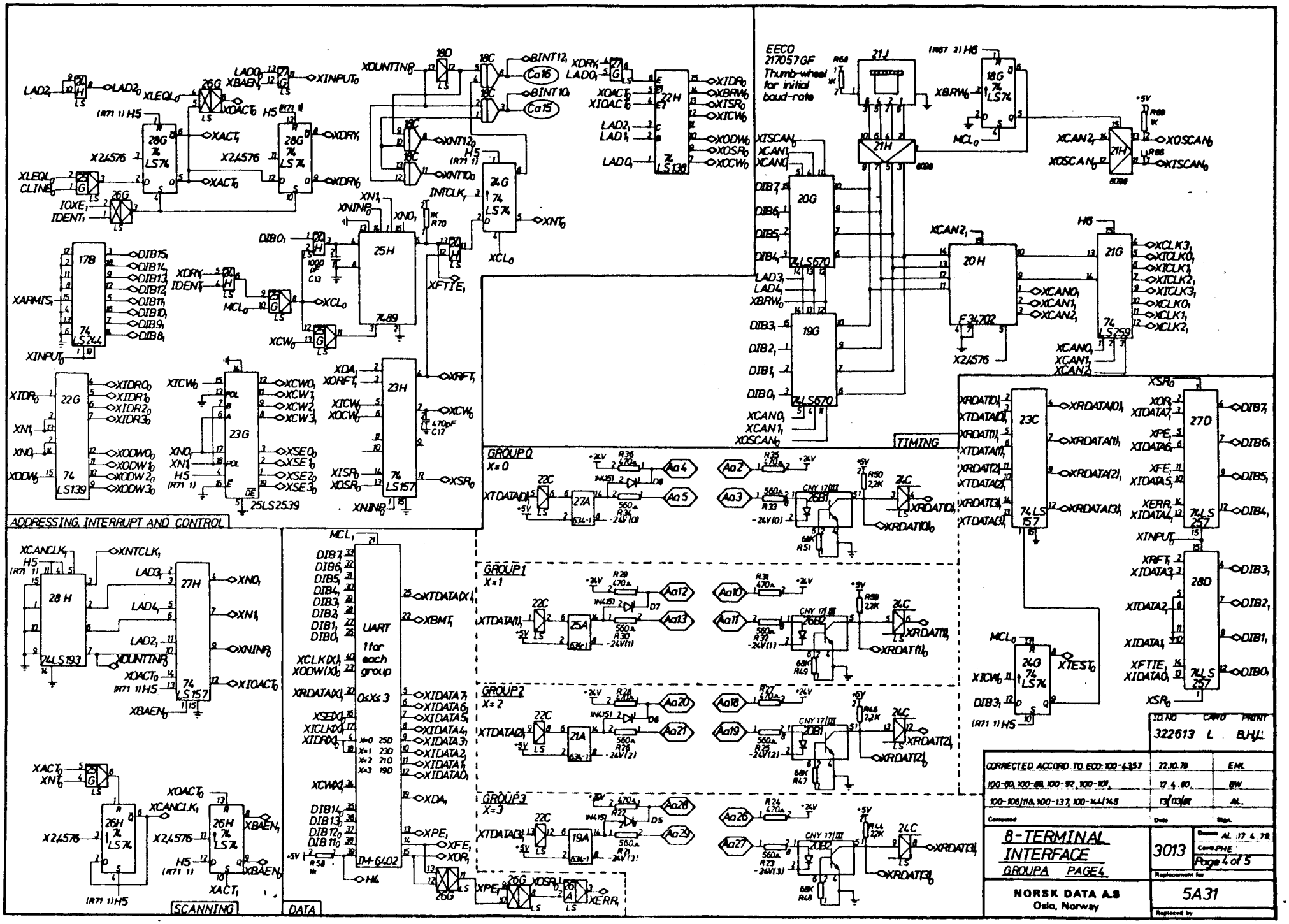
ADDRESSING, INTERRUPT AND CONTROL
SCANNING
DATA
TIMING
GROUP 0
X=0
GROUP 1
X=1
GROUP 2
X=2
GROUP 3
X=3
EECO
217057GF
Thumb-wheel
for initial
baud-rate
UART
1 for
each
group
TM-6402
8-TERMINAL
INTERFACE
GROUPA PAGE4
NORSK DATA A.S
Oslo, Norway
3013
5A31
322613
CORRECTED ACCORD. TO ECO: 100-6357
22.10.79
17.4.80
13/03/81
Page 4 of 5

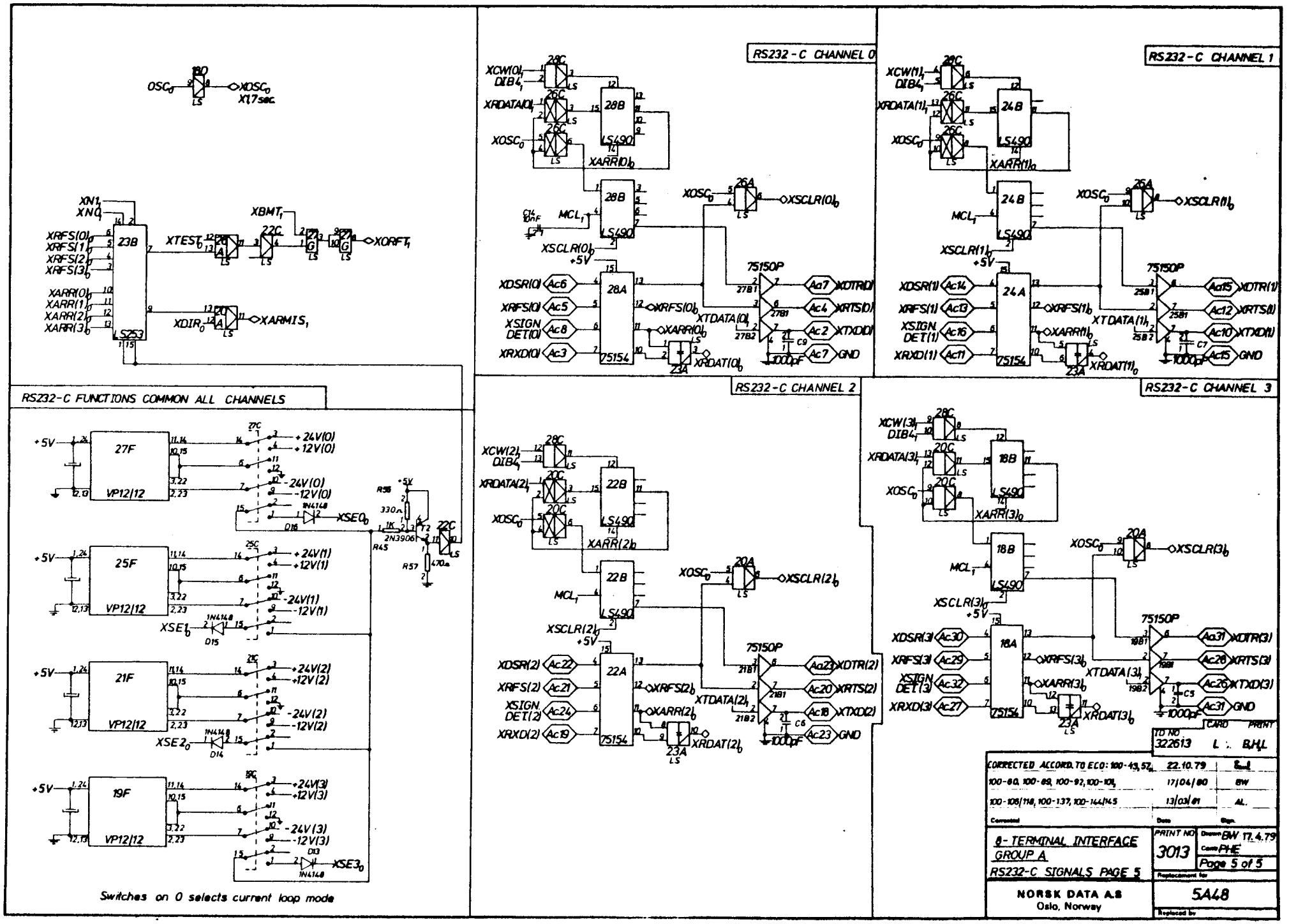
RS232-C CHANNEL 0
RS232-C CHANNEL 1
RS232-C CHANNEL 2
RS232-C CHANNEL 3
RS232-C FUNCTIONS COMMON ALL CHANNELS
Switches on 0 selects current loop mode
8-TERMINAL INTERFACE GROUP A
RS232-C SIGNALS PAGE 5
NORSK DATA A.S
Oslo, Norway
PRINT NO 3013
Page 5 of 5
5A48
CORRECTED ACCORD. TO ECO: 100-43, 57, 22.10.79
100-80, 100-89, 100-92, 100-101, 17/04/80
100-108/118, 100-137, 100-144/145 13/03/81
TD NO 322613
L. BJ.L

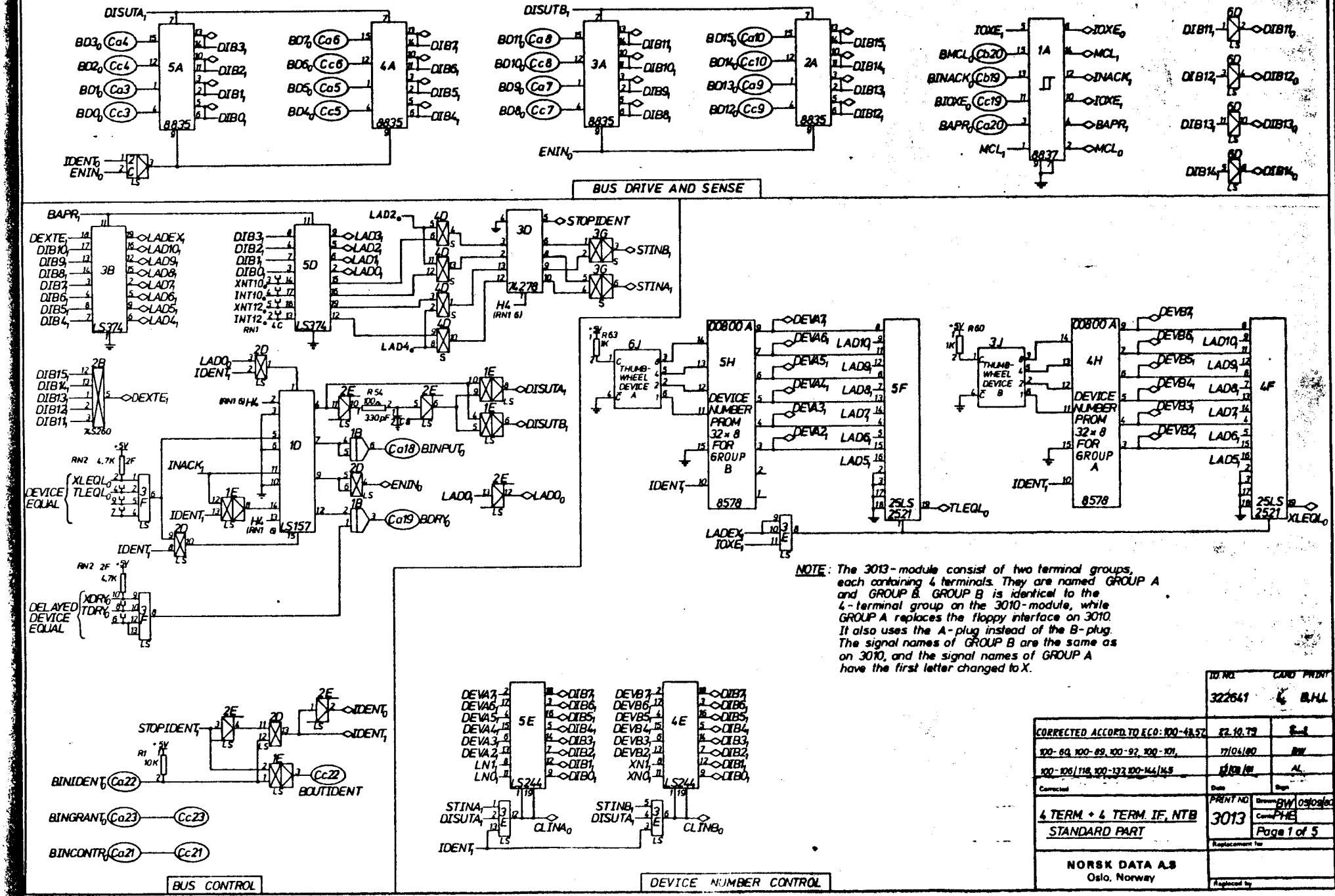
BUS DRIVE AND SENSE
BUS CONTROL
DEVICE NUMBER CONTROL
DEVICE NUMBER PROM 32 x 8 FOR GROUP B
DEVICE NUMBER PROM 32 x 8 FOR GROUP A
THUMB-WHEEL DEVICE A
THUMB-WHEEL DEVICE B
DEVICE EQUAL
DELAYED DEVICE EQUAL
NOTE: The 3013-module consist of two terminal groups, each containing 4 terminals. They are named GROUP A and GROUP B. GROUP B is identical to the 4-terminal group on the 3010-module, while GROUP A replaces the floppy interface on 3010. It also uses the A-plug instead of the B-plug. The signal names of GROUP B are the same as on 3010, and the signal names of GROUP A have the first letter changed to X.
ID NO. 322641
CARD PRINT B.H.L.
CORRECTED ACCORD. TO ECO: 100-48,57 22.10.79
100-60, 100-89, 100-97, 100-101, 17/04/80
100-106/118, 100-137, 100-144/145
Corrected
4 TERM. + 4 TERM. IF, NTB
STANDARD PART
PRINT NO. 3013
Page 1 of 5
NORSK DATA A.S
Oslo, Norway

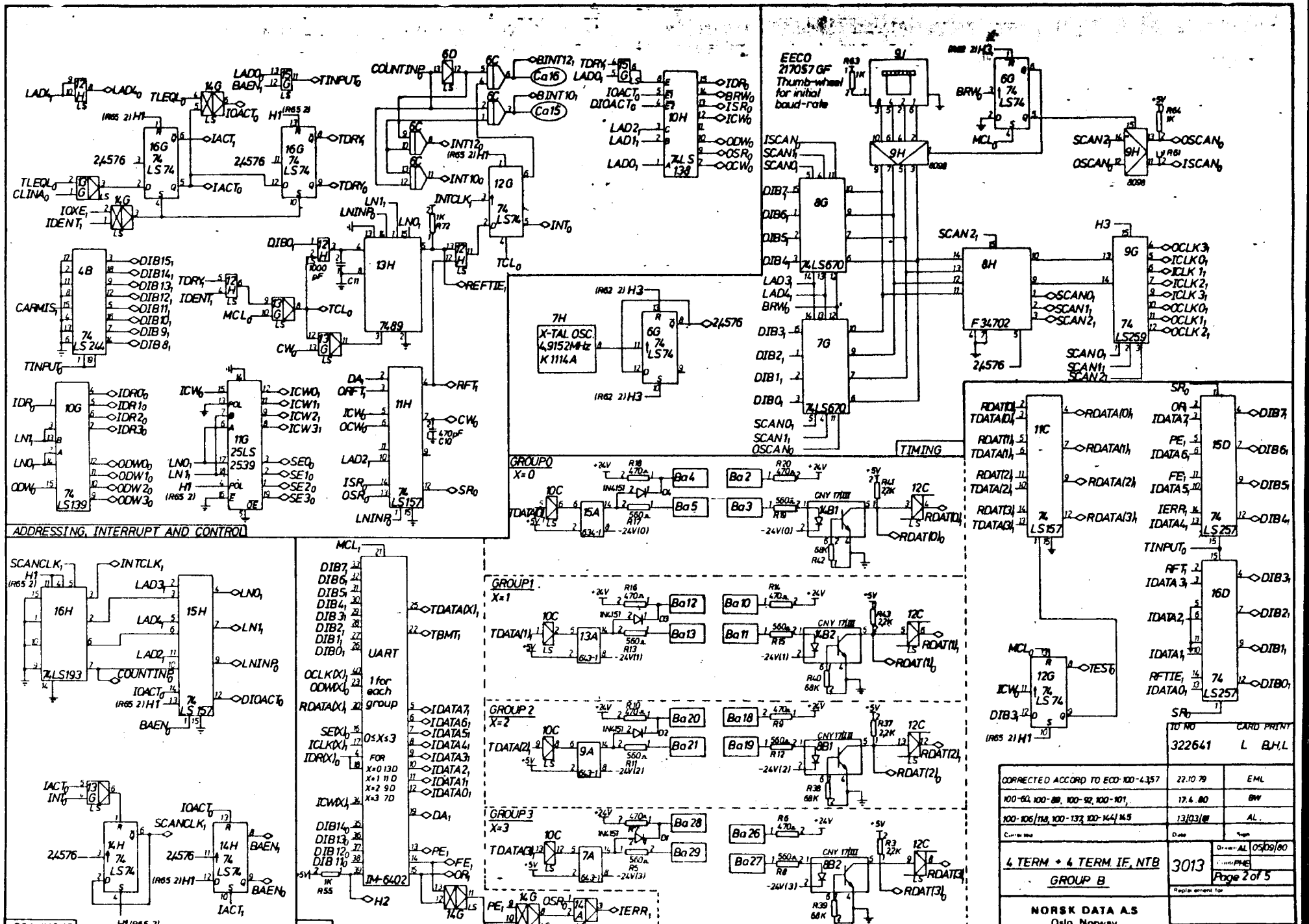
ADDRESSING, INTERRUPT AND CONTROL
SCANNING
DATA
GROUP 0
X=0
GROUP 1
X=1
GROUP 2
X=2
GROUP 3
X=3
TIMING
EECO
217057 GF
Thumb-wheel
for inital
baud-rate
X-TAL OSC.
4,9152MHz
K 1114.A
UART
1 for
each
group
IM-6402
74 LS 244
74 LS 139
74 LS 157
74 LS 257
74 LS 259
74 LS 670
74 LS 138
74 LS 74
74 LS 193
74 LS 152
74 LS 245
74 LS 257
F 34702
25LS
2539
74,89
CNY 17 III
TO NO
322641
CARD PRINT
L BJH,L
CORRECTED ACCORD TO ECO 100-4357
22.10.79
EML
100-60, 100-89, 100-92, 100-101,
17.4.80
BW
100-106/118, 100-137, 100-144/145
13/03/81
AL.
4 TERM. + 4 TERM. IF, NTB
GROUP B
3013
Page 2 of 5
NORSK DATA A.S
Oslo, Norway

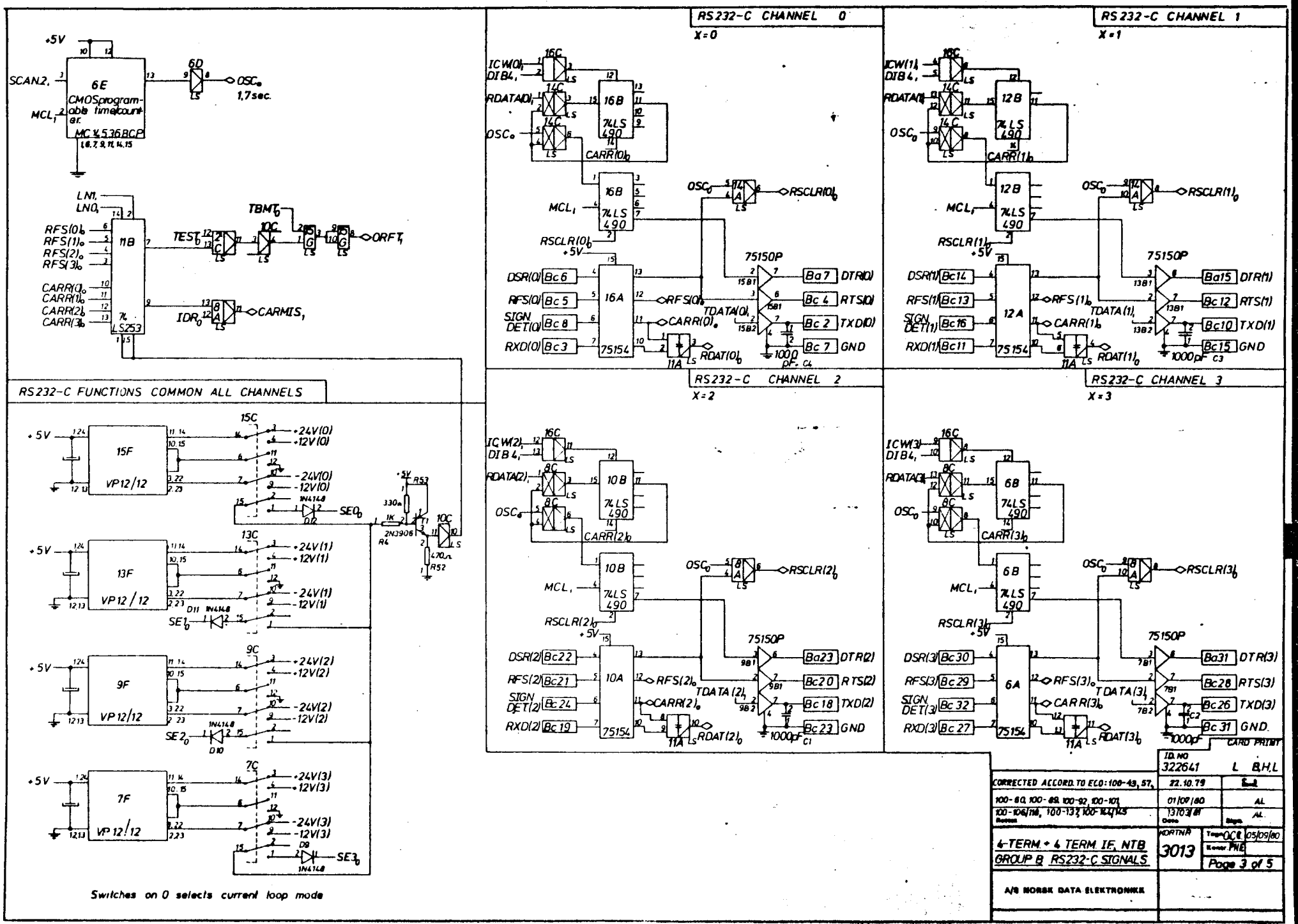
RS232-C CHANNEL 0
X=0
RS232-C CHANNEL 1
X=1
RS232-C CHANNEL 2
X=2
RS232-C CHANNEL 3
X=3
RS232-C FUNCTIONS COMMON ALL CHANNELS
+5V
SCAN2
MCL1
6E
CMOS programmable timecounter
MC 14536BCP
OSC0
1,7sec.
6D
LN1
LN0
RFS(0)
RFS(1)
RFS(2)
RFS(3)
CARR(0)
CARR(1)
CARR(2)
CARR(3)
11B
74 LS253
TEST0
TBMT0
10C
ORFT1
IDR0
CARMIS1
ICW(0)
DIB4
RDATA(0)
16C
14C
16B
74LS 490
CARR(0)
RSCLR(0)
16A
75154
DSR(0)
RFS(0)
SIGN DET(0)
RXD(0)
Bc6
Bc5
Bc8
Bc3
75150P
Ba7
DTR(0)
Bc4
RTS(0)
Bc2
TXD(0)
Bc7
GND
TDATA(0)
RDAT(0)
11A
1000 pF C4
ICW(1)
RDATA(1)
12B
12A
CARR(1)
RSCLR(1)
DSR(1)
RFS(1)
SIGN DET(1)
RXD(1)
Bc14
Bc13
Bc16
Bc11
Ba15
DTR(1)
Bc12
RTS(1)
Bc10
TXD(1)
Bc15
GND
TDATA(1)
RDAT(1)
1000pF C3
ICW(2)
DIB4
RDATA(2)
8C
10B
10A
CARR(2)
RSCLR(2)
DSR(2)
RFS(2)
SIGN DET(2)
RXD(2)
Bc22
Bc21
Bc24
Bc19
Ba23
DTR(2)
Bc20
RTS(2)
Bc18
TXD(2)
Bc23
GND
TDATA(2)
RDAT(2)
1000pF C1
ICW(3)
DIB4
RDATA(3)
6B
6A
CARR(3)
RSCLR(3)
DSR(3)
RFS(3)
SIGN DET(3)
RXD(3)
Bc30
Bc29
Bc32
Bc27
Ba31
DTR(3)
Bc28
RTS(3)
Bc26
TXD(3)
Bc31
GND
TDATA(3)
RDAT(3)
1000pF C2
CARD PRINT
15F
VP12/12
15C
+24V(0)
+12V(0)
-24V(0)
-12V(0)
SE0
D12
13F
VP12/12
13C
+24V(1)
+12V(1)
-24V(1)
-12V(1)
SE1
D11
9F
VP12/12
9C
+24V(2)
+12V(2)
-24V(2)
-12V(2)
SE2
D10
7F
VP12/12
7C
+24V(3)
+12V(3)
-24V(3)
-12V(3)
SE3
D9
1N4148
RS3
330Ω
1K
2N3906
R4
470Ω
RS2
Switches on 0 selects current loop mode
ID NO
322641
L B.H.L
CORRECTED ACCORD. TO ECO: 100-43, 57,
22.10.79
100-60, 100-89, 100-92, 100-101
01/09/80
AL
100-106/116, 100-137, 100-144/145
13/03/81
AL
4-TERM. + 4 TERM IF, NTB
GROUP B RS232-C SIGNALS
NORTN/A
3013
05/09/80
Page 3 of 5
A/S NORSK DATA ELEKTRONIKK

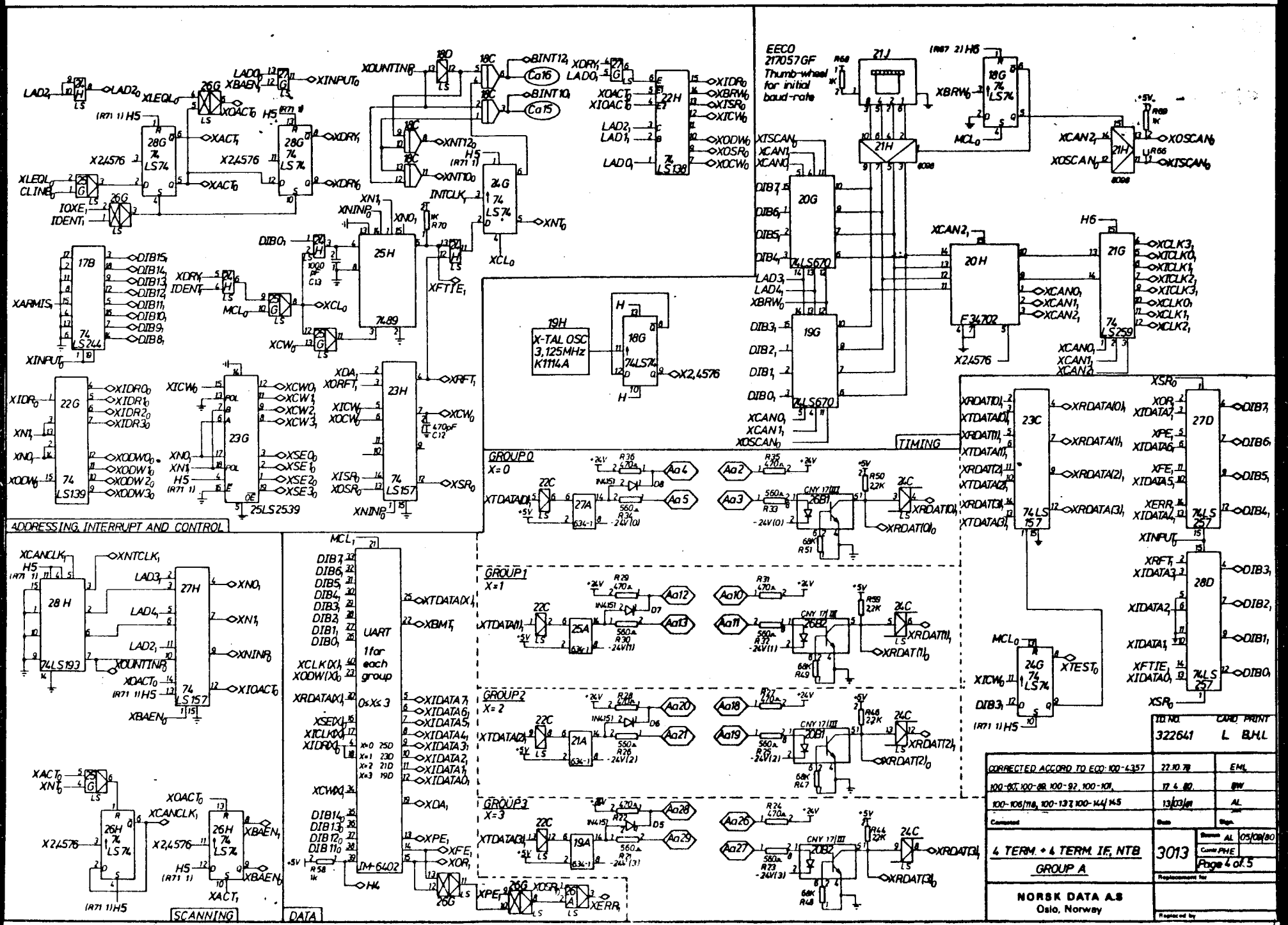
EECO 217057GF Thumb-wheel for initial baud-rate
X-TAL OSC 3,125MHz K1114.A
ADDRESSING, INTERRUPT AND CONTROL
SCANNING
DATA
TIMING
GROUP 0
GROUP 1
GROUP 2
GROUP 3
UART 1for each group
4 TERM. + 4 TERM. IF, NTB
GROUP A
NORSK DATA A.S
Oslo, Norway
322641
3013
Page 4 of 5

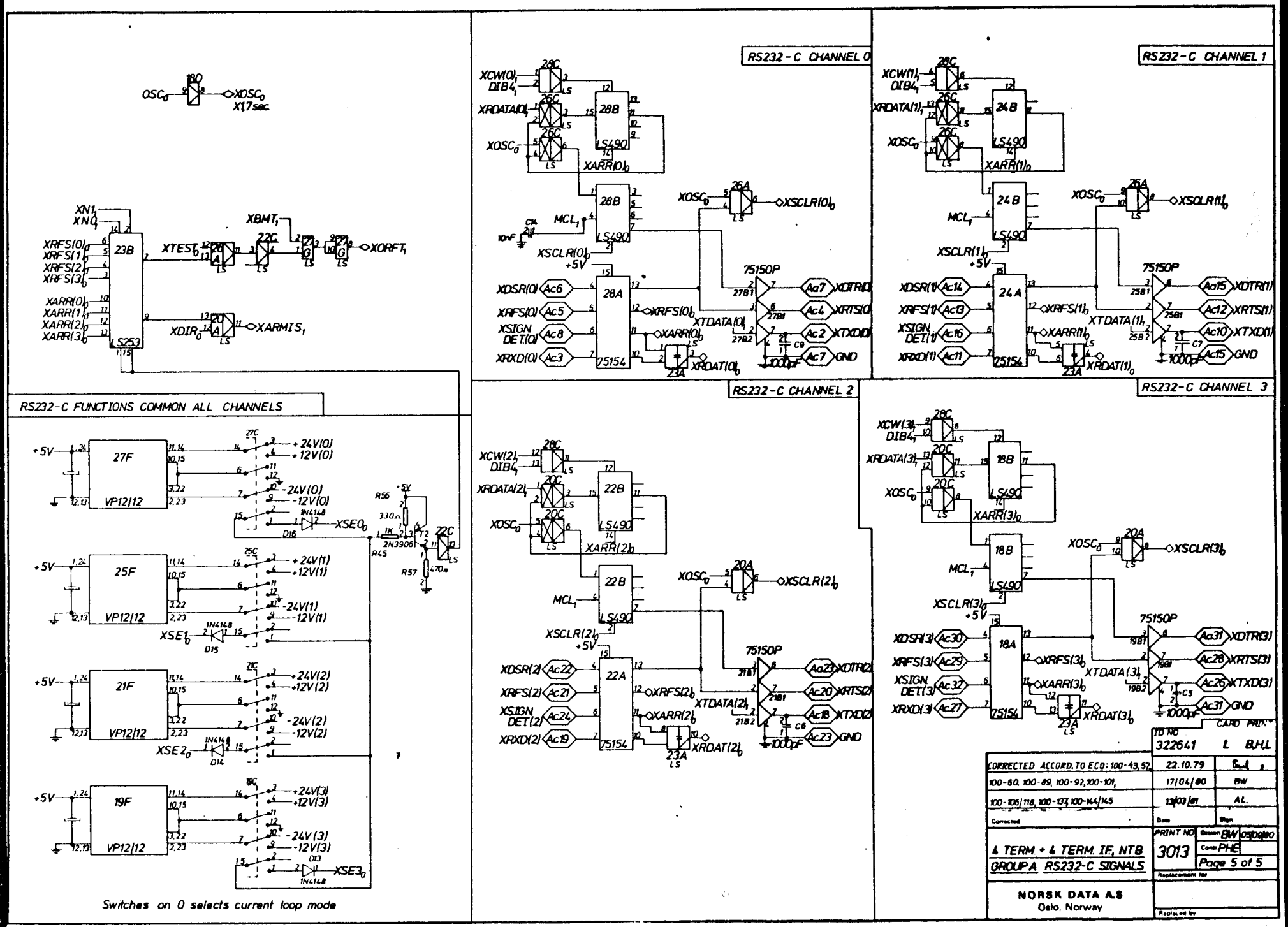

Switches on 0 selects current loop mode

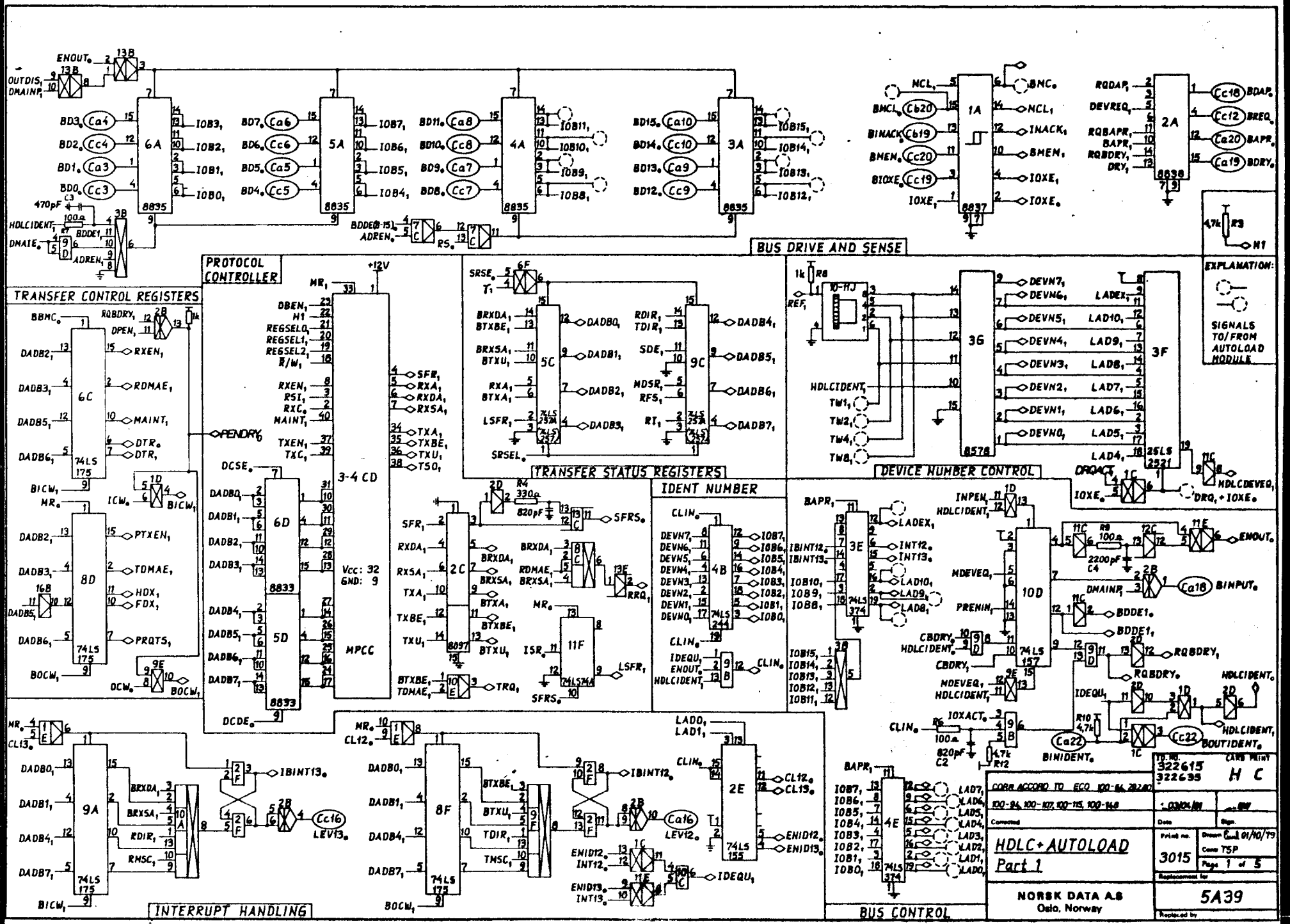
BUS DRIVE AND SENSE
TRANSFER CONTROL REGISTERS
PROTOCOL CONTROLLER
TRANSFER STATUS REGISTERS
IDENT NUMBER
DEVICE NUMBER CONTROL
EXPLANATION:
SIGNALS TO/FROM AUTOLOAD MODULE
INTERRUPT HANDLING
BUS CONTROL
MPCC
HDLC+AUTOLOAD
Part 1
NORSK DATA A.S
Oslo, Norway
5A39
3015
Page 1 of 5

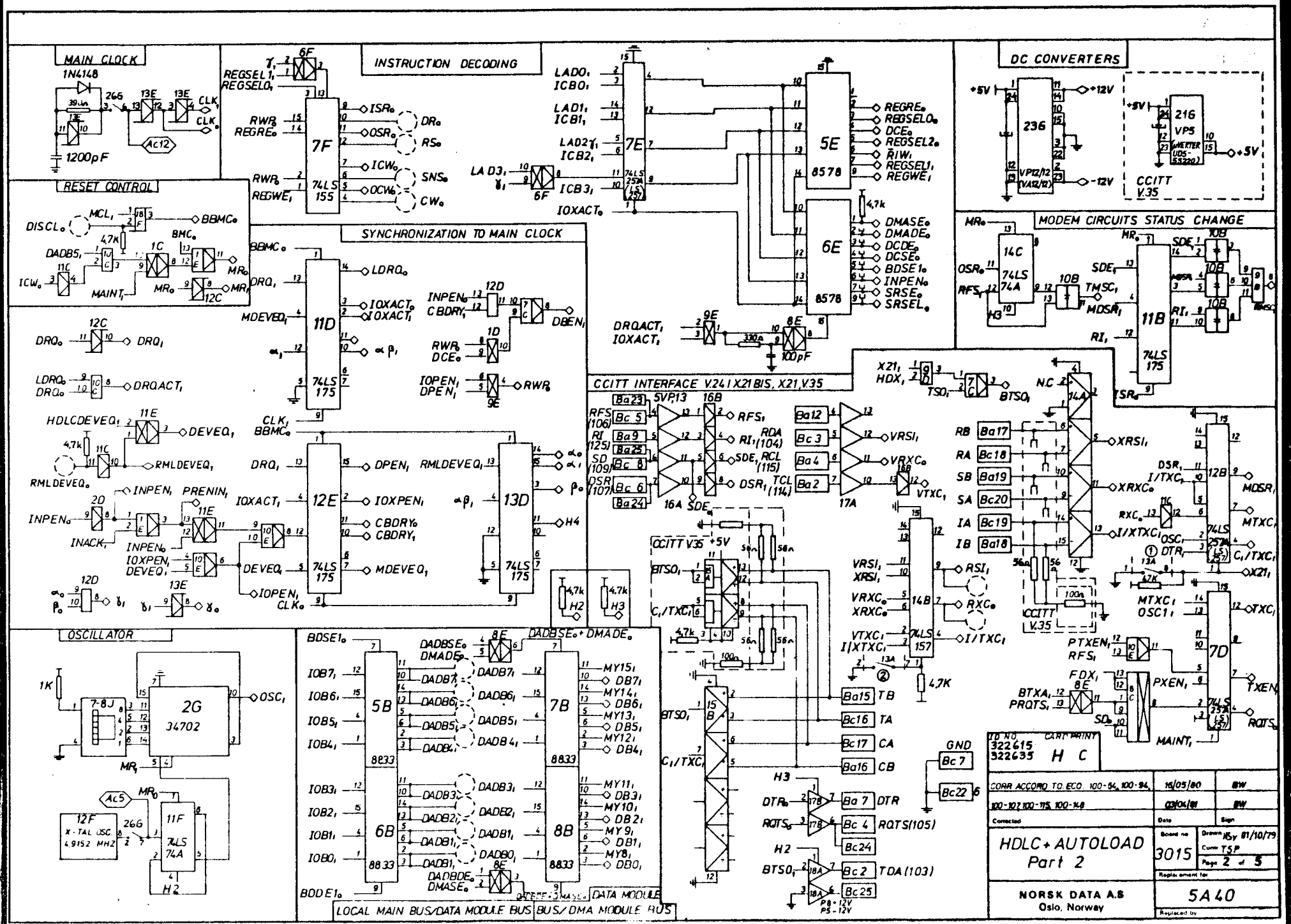
MAIN CLOCK
INSTRUCTION DECODING
DC CONVERTERS
RESET CONTROL
SYNCHRONIZATION TO MAIN CLOCK
MODEM CIRCUITS STATUS CHANGE
CCITT INTERFACE V.24 I X21 BIS, X21, V35
OSCILLATOR
LOCAL MAIN BUS/DATA MODULE BUS
BUS/DMA MODULE BUS
DATA MODULE
HDLC + AUTOLOAD
Part 2
NORSK DATA A.S
Oslo, Norway
3015
5A40

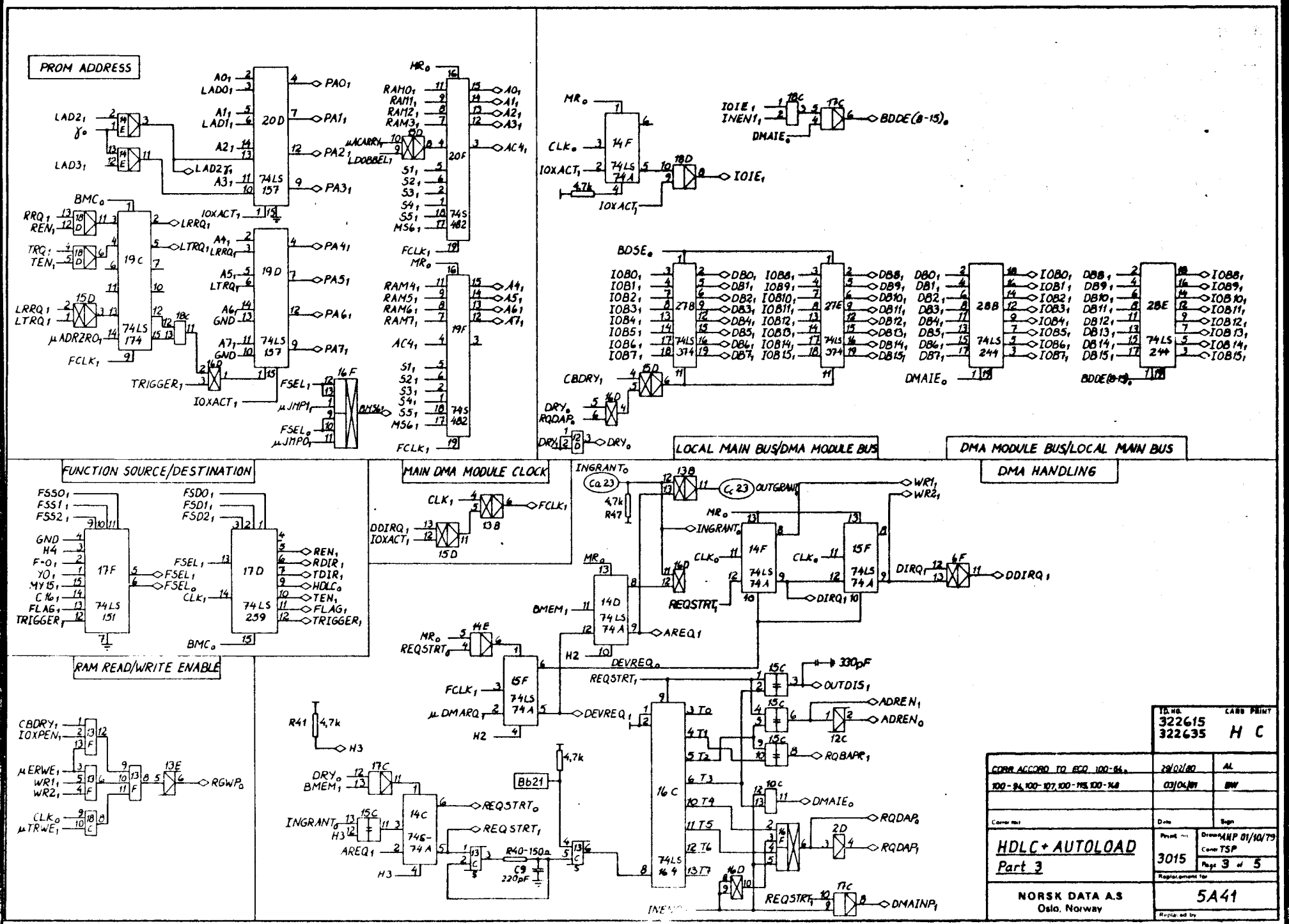
PROM ADDRESS
LOCAL MAIN BUS/DMA MODULE BUS
DMA MODULE BUS/LOCAL MAIN BUS
FUNCTION SOURCE/DESTINATION
MAIN DMA MODULE CLOCK
DMA HANDLING
RAM READ/WRITE ENABLE
HDLC+ AUTOLOAD
Part 3
NORSK DATA A.S
Oslo, Norway
3015
5A41
322615
322635
H C
Page 3 of 5

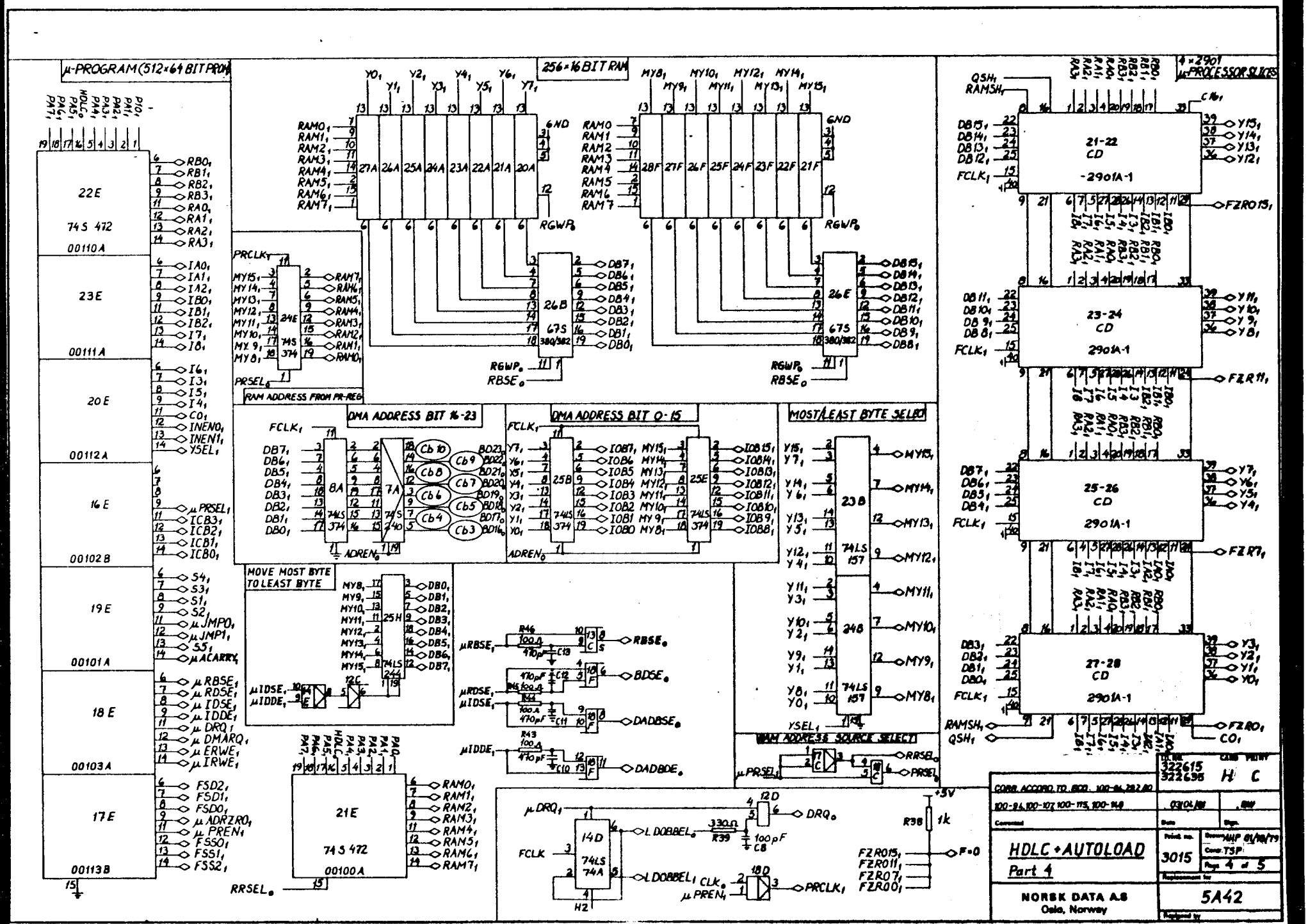
µ-PROGRAM (512×64 BIT PROM)
22E
74S 472
00110A
23E
00111A
20E
00112A
16E
00102B
19E
00101A
18E
00103A
17E
00113B
256×16 BIT RAM
27A 26A 25A 24A 23A 22A 21A 20A
28F 27F 26F 25F 24F 23F 22F 21F
26B
26E
675
380/382
24E
74S 374
RAM ADDRESS FROM PR-REG
DMA ADDRESS BIT 16-23
DMA ADDRESS BIT 0-15
MOST/LEAST BYTE SELECT
MOVE MOST BYTE TO LEAST BYTE
25H
74LS 244
21E
74S 472
00100A
RAM ADDRESS SOURCE SELECT
74LS 157
4×2901 µ-PROCESSOR SLICES
21-22
CD
-2901A-1
23-24
25-26
27-28
14D
74LS 74A
12D
18D
HDLC+AUTOLOAD
Part 4
NORSK DATA A.S
Oslo, Norway
3015
5A42
322615
322695
H C
03/04/80
4 of 5

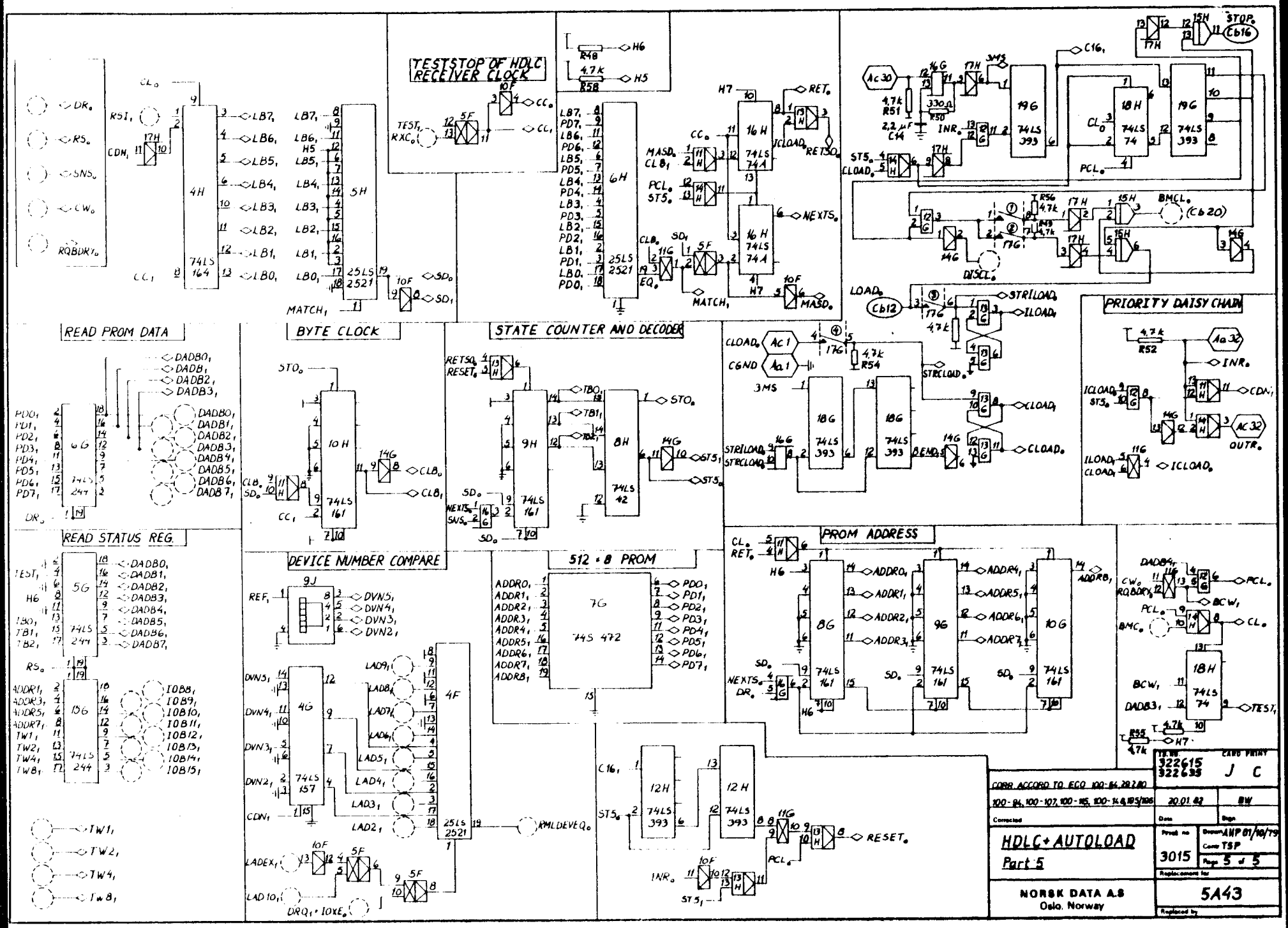
TESTSTOP OF HDLC RECEIVER CLOCK
READ PROM DATA
BYTE CLOCK
STATE COUNTER AND DECODER
PRIORITY DAISY CHAIN
READ STATUS REG.
DEVICE NUMBER COMPARE
512 * 8 PROM
PROM ADDRESS
HDLC+ AUTOLOAD
Part 5
NORSK DATA A.S
Oslo, Norway
3015
5A43
J C
20.01.82
BW
TSP
5 of 5

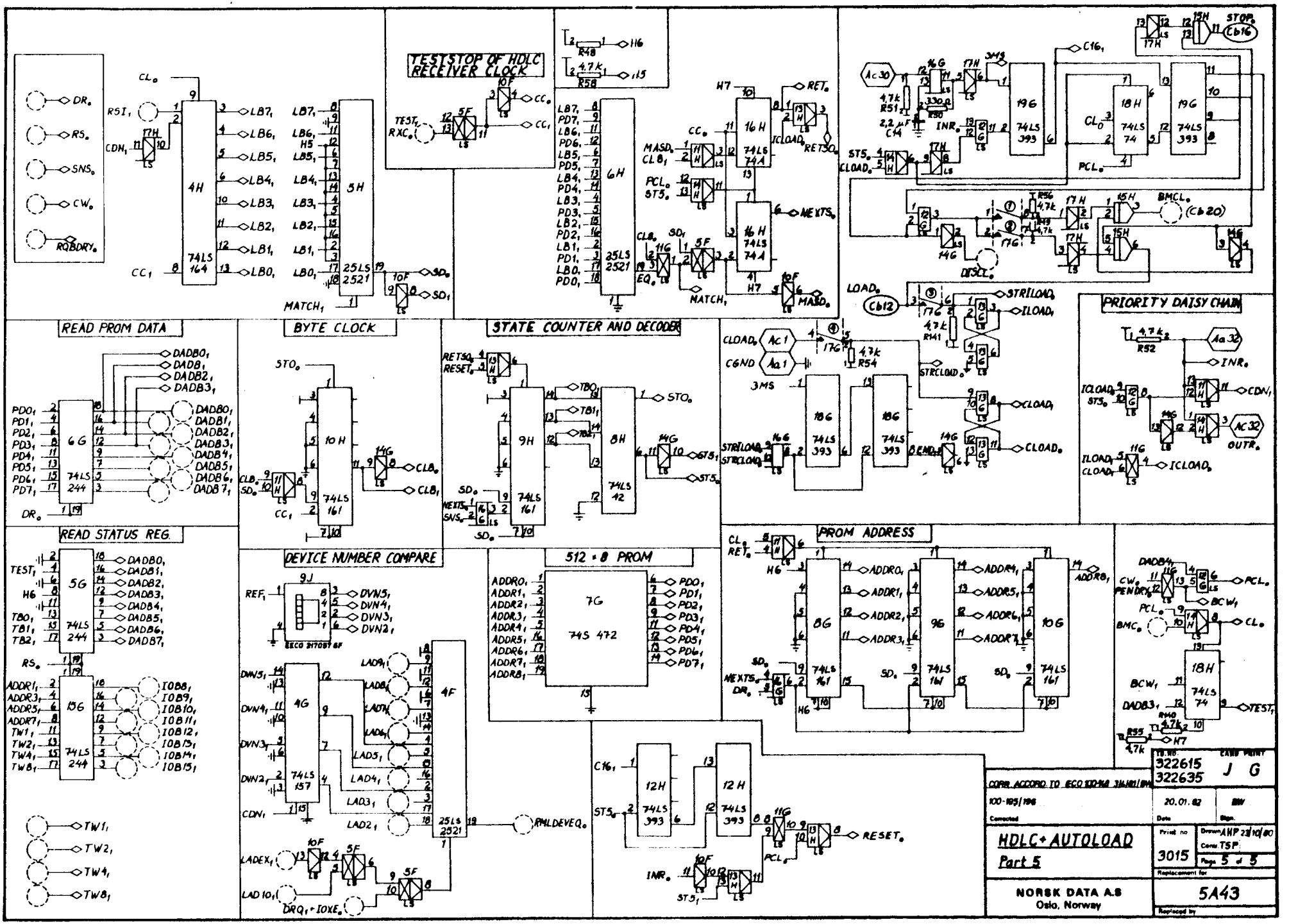
TESTSTOP OF HDLC RECEIVER CLOCK
READ PROM DATA
BYTE CLOCK
STATE COUNTER AND DECODER
PRIORITY DAISY CHAIN
READ STATUS REG.
DEVICE NUMBER COMPARE
512 × 8 PROM
PROM ADDRESS
HDLC+ AUTOLOAD
Part 5
NORSK DATA A.S
Oslo, Norway
322615
322635
J G
20.01.82
3015
5A43

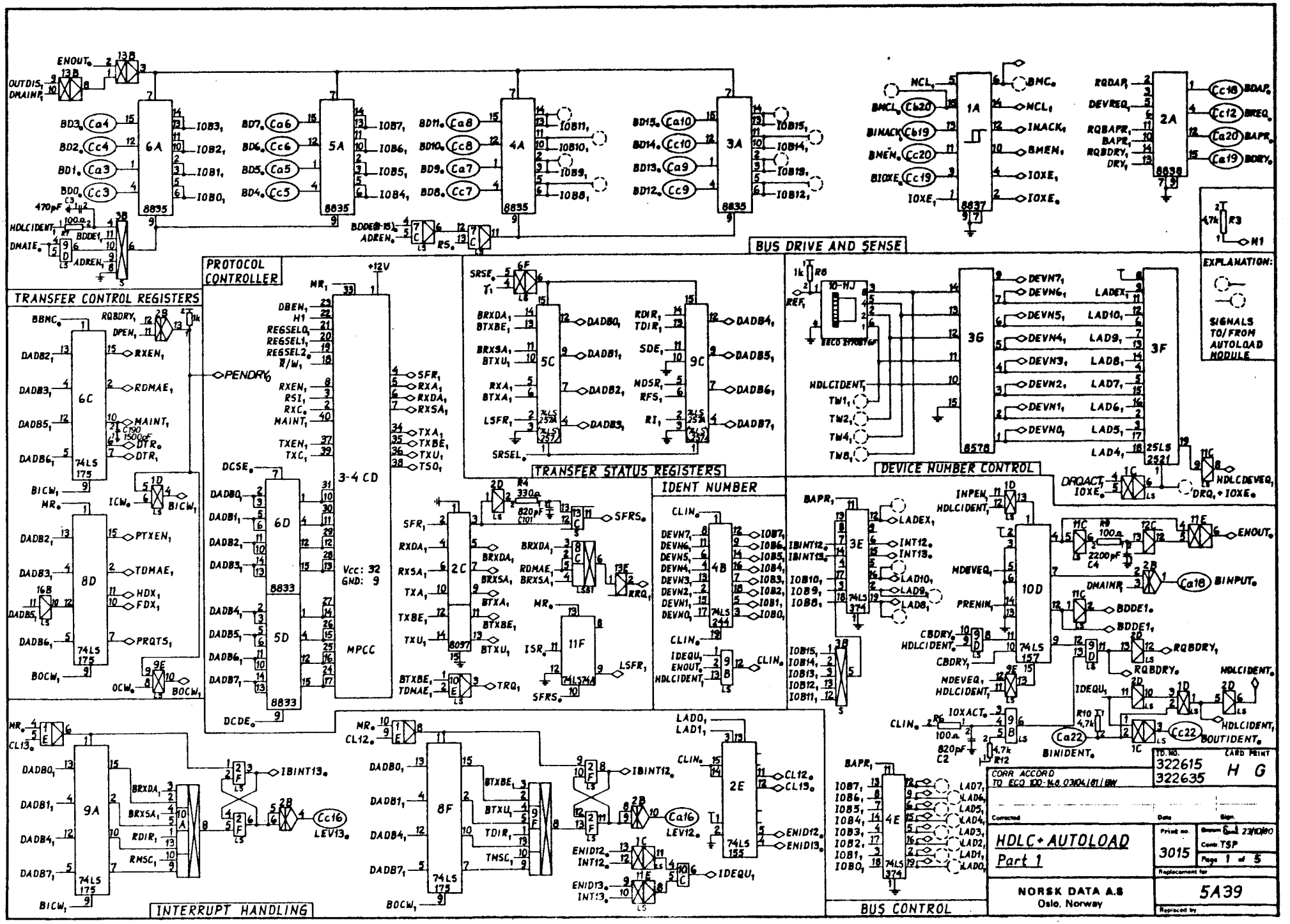
TRANSFER CONTROL REGISTERS
PROTOCOL CONTROLLER
BUS DRIVE AND SENSE
TRANSFER STATUS REGISTERS
IDENT NUMBER
DEVICE NUMBER CONTROL
INTERRUPT HANDLING
BUS CONTROL
EXPLANATION:
SIGNALS TO/FROM AUTOLOAD MODULE
3-4 CD
MPCC
Vcc: 32
GND: 9
CORR ACCORD TO ECO 100-148.0304/81/BW
HDLC+AUTOLOAD
Part 1
3015
NORSK DATA A.S
Oslo, Norway
5A39
322615
322635
H G
Page 1 of 5

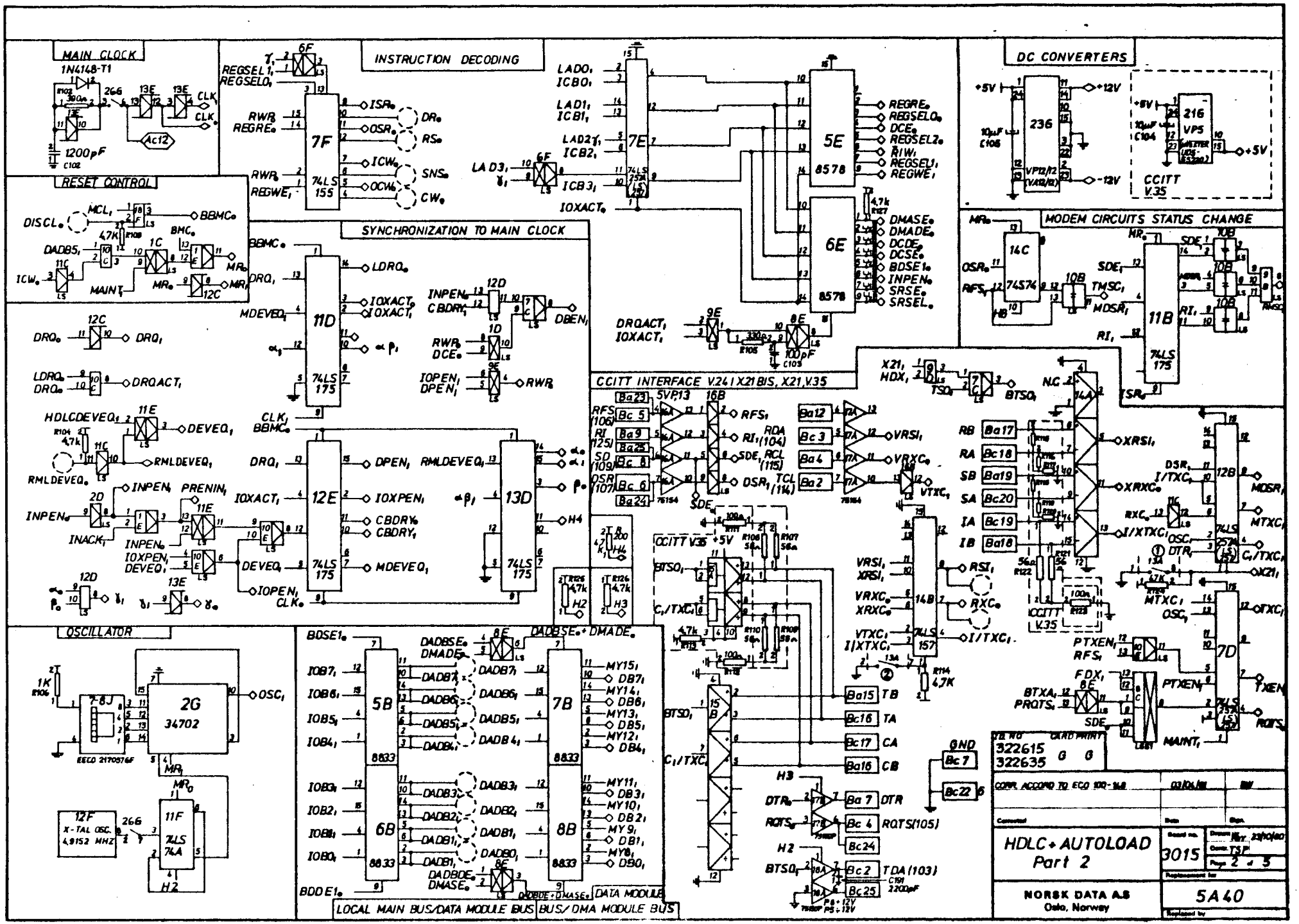
MAIN CLOCK
INSTRUCTION DECODING
DC CONVERTERS
RESET CONTROL
SYNCHRONIZATION TO MAIN CLOCK
MODEM CIRCUITS STATUS CHANGE
CCITT INTERFACE V.24 I X21 BIS, X21, V.35
OSCILLATOR
LOCAL MAIN BUS/DATA MODULE BUS
BUS/DMA MODULE BUS
DATA MODULE
HDLC + AUTOLOAD
Part 2
NORSK DATA A.S
Oslo, Norway
5A40
3015

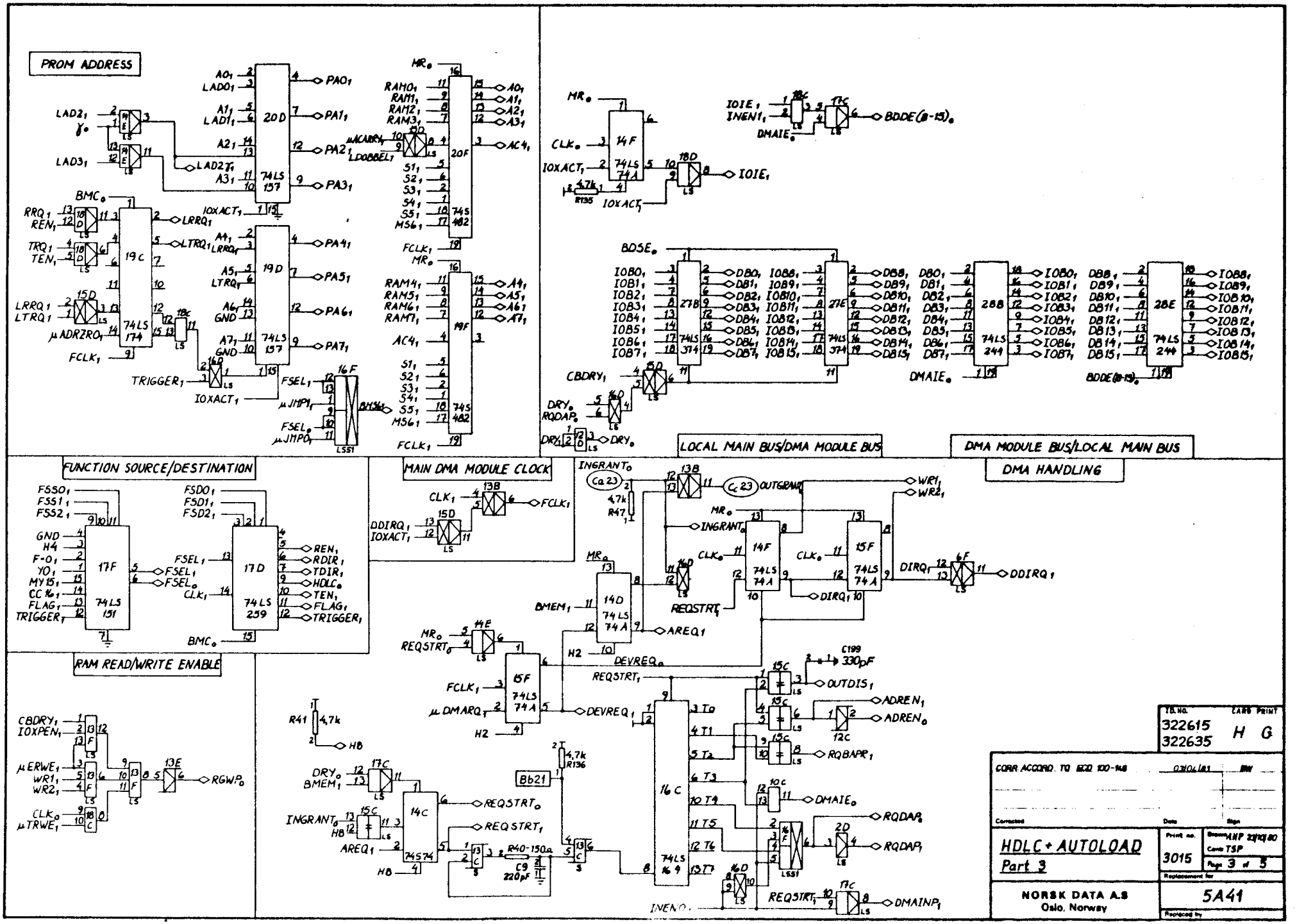
PROM ADDRESS
20D
74LS 157
20F
74S 482
19C
74LS 174
19D
74LS 157
19F
74S 482
16F
LS51
14F
74LS 74A
18D
LS
17C
LS
BDOE(8-15)
IOIE
27B
74LS 374
27E
74LS 374
28B
74LS 244
28E
74LS 244
LOCAL MAIN BUS/DMA MODULE BUS
DMA MODULE BUS/LOCAL MAIN BUS
DMA HANDLING
FUNCTION SOURCE/DESTINATION
17F
74LS 151
17D
74LS 259
MAIN DMA MODULE CLOCK
14D
74LS 74A
15F
74LS 74A
16C
74LS 164
14C
74S74
RAM READ/WRITE ENABLE
13E
RGWP
DMAINP
DDIRQ
OUTDIS
ADREN
RQBAPR
RQDAP
DMAIE
REQSTRT
DEVREQ
AREQ
C199
330pF
R136
4,7k
Bb21
R40-150Ω
C9
220pF
R41
4,7k
R135
4,7k
R47
4,7k
Ca 23
Cc 23
INGRANT
OUTGRANT
WR1
WR2
DIRQ
INEN
TB.NO.
322615
322635
CARD PRINT
H G
CORR. ACCORD. TO ECO 100-148
HDLC + AUTOLOAD
Part 3
3015
Page 3 of 5
NORSK DATA A.S
Oslo, Norway
5A41

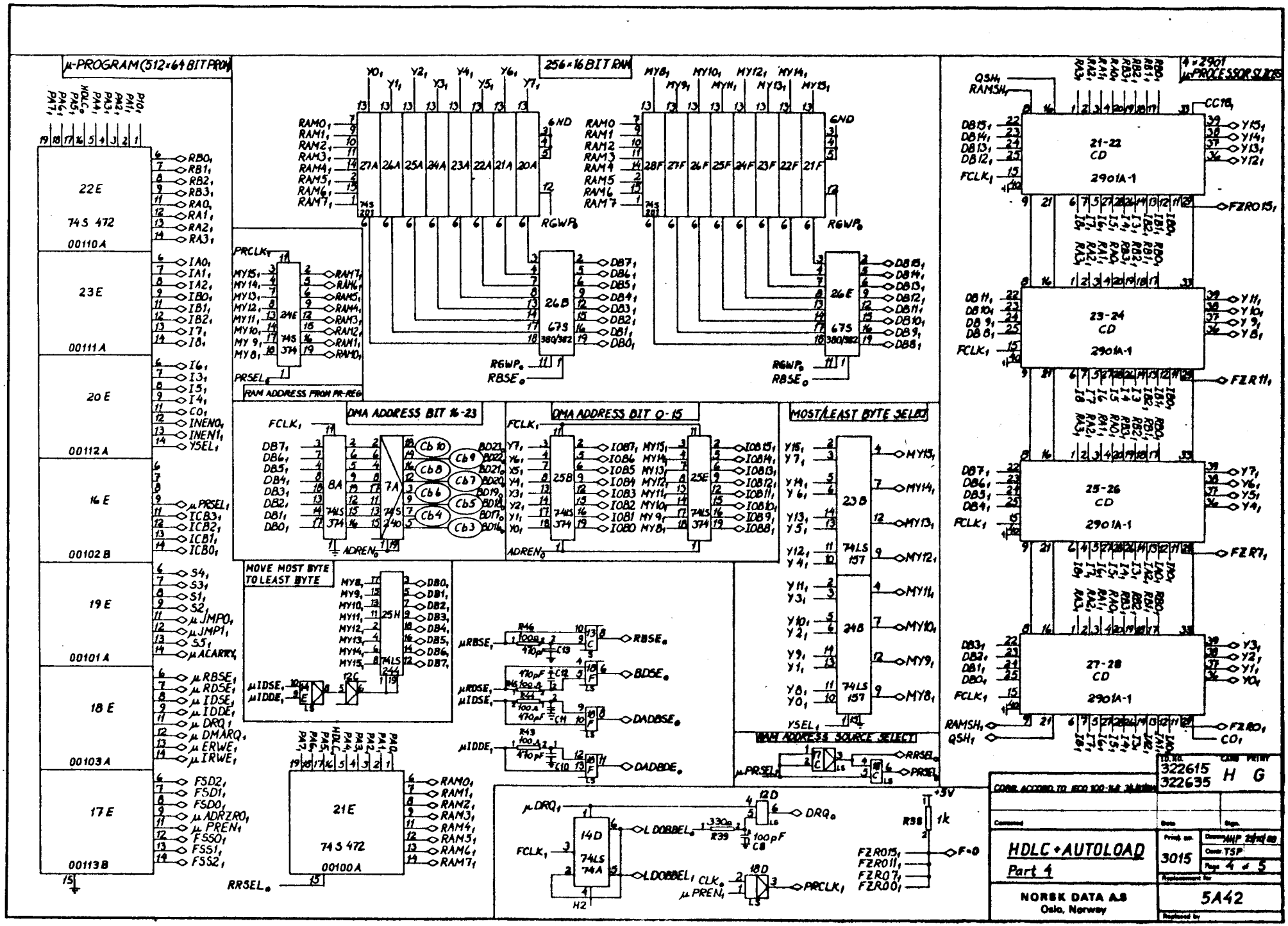
µ-PROGRAM (512×64 BIT PROM)
22E 74S 472 00110A
23E 00111A
20E 00112A
16E 00102B
19E 00101A
18E 00103A
17E 00113B
21E 74S 472 00100A
256×16 BIT RAM
RAM ADDRESS FROM PR-REG
DMA ADDRESS BIT 16-23
DMA ADDRESS BIT 0-15
MOST/LEAST BYTE SELECT
MOVE MOST BYTE TO LEAST BYTE
RAM ADDRESS SOURCE SELECT
4×2901 µ-PROCESSOR SLICES
21-22 CD 2901A-1
23-24 CD 2901A-1
25-26 CD 2901A-1
27-28 CD 2901A-1
HDLC+AUTOLOAD
Part 4
NORSK DATA A.S
Oslo, Norway
322615
322635
H G
3015
5A42

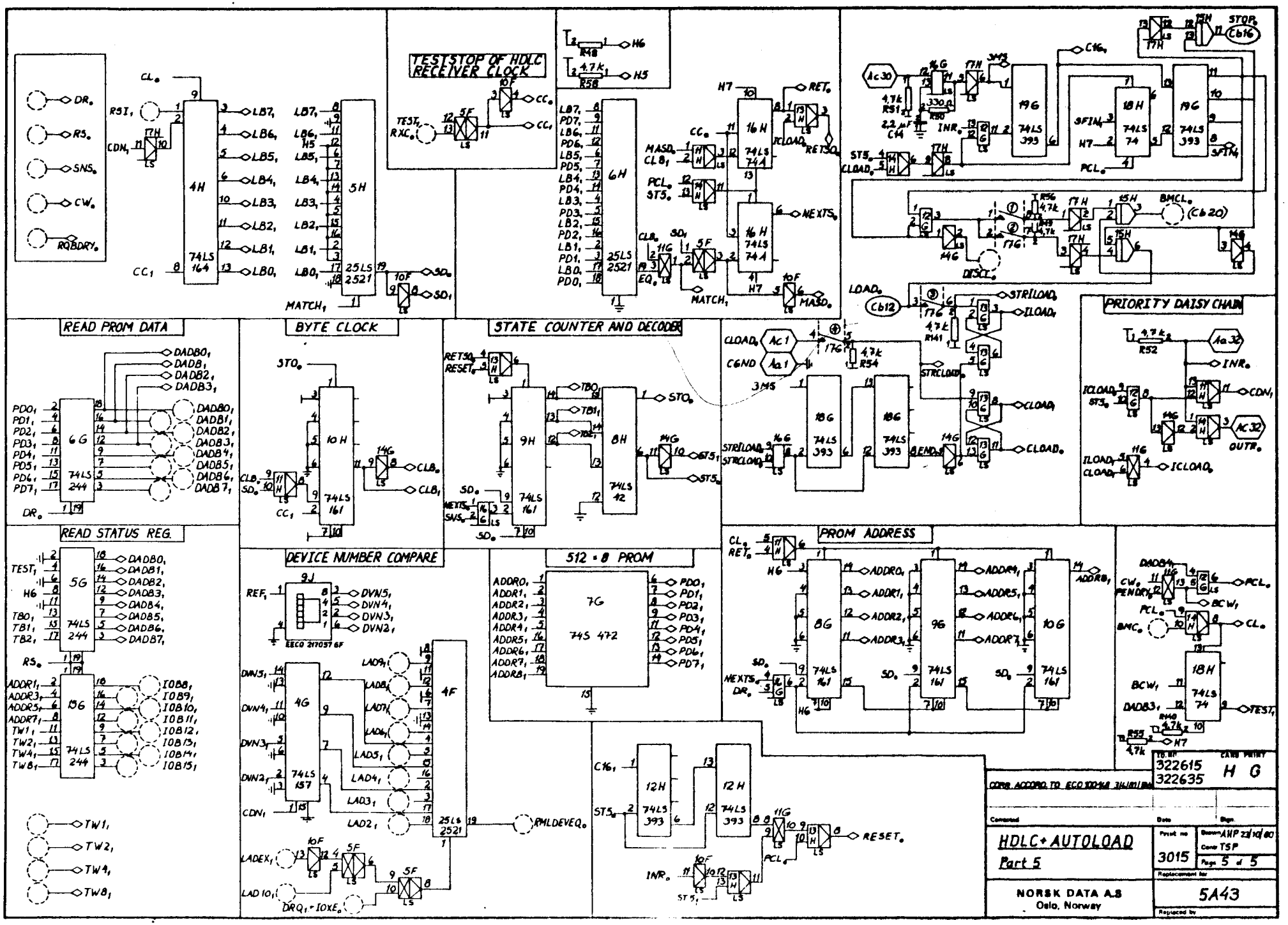
TESTSTOP OF HDLC RECEIVER CLOCK
READ PROM DATA
BYTE CLOCK
STATE COUNTER AND DECODER
PRIORITY DAISY CHAIN
READ STATUS REG.
DEVICE NUMBER COMPARE
512 * 8 PROM
PROM ADDRESS
HDLC+AUTOLOAD
Part 5
NORSK DATA A.S
Oslo, Norway
322615
322635
H G
3015
5A43

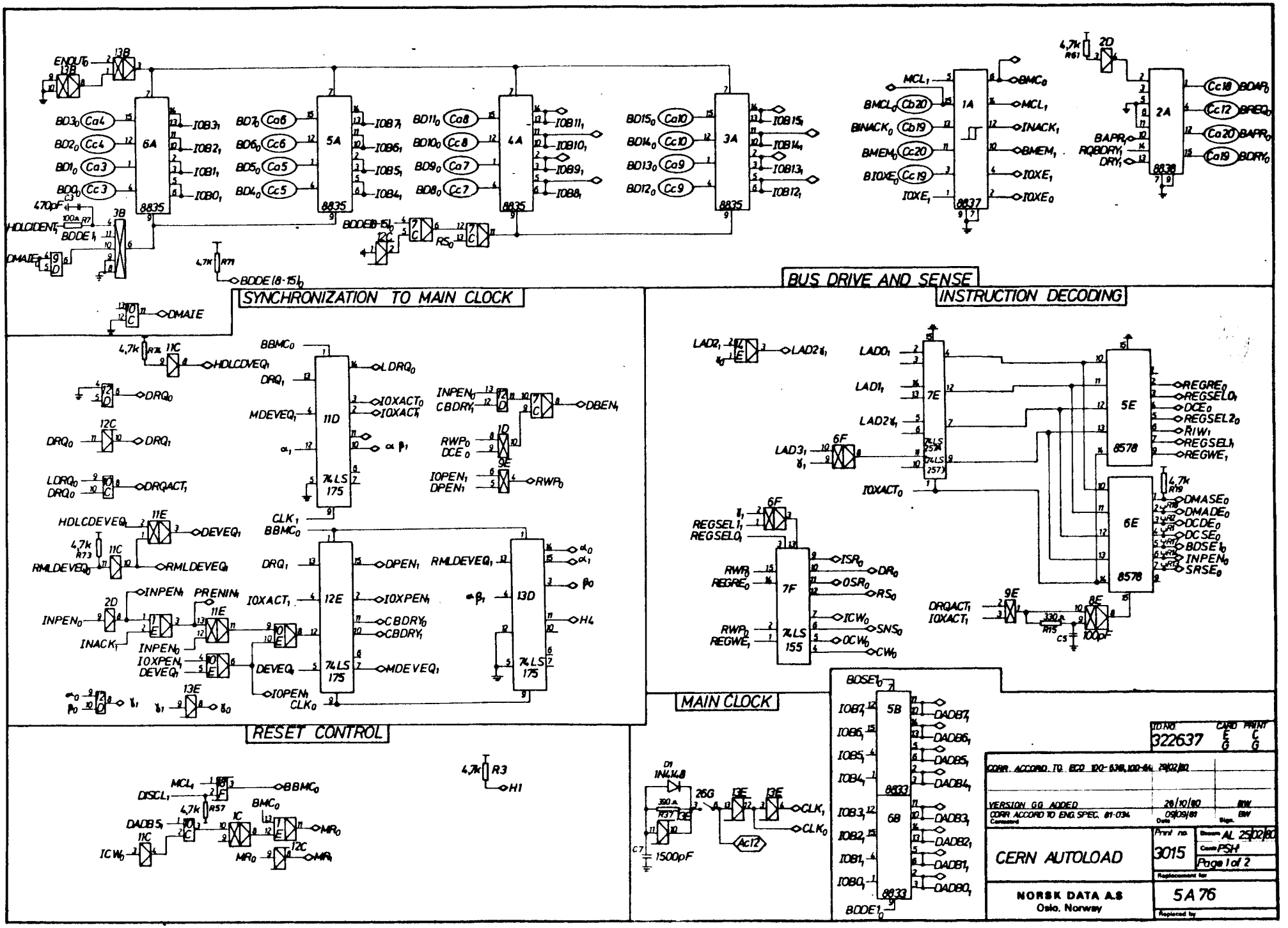
BUS DRIVE AND SENSE
SYNCHRONIZATION TO MAIN CLOCK
INSTRUCTION DECODING
RESET CONTROL
MAIN CLOCK
6A
5A
4A
3A
1A
2A
8835
8837
8838
11D
12E
13D
7E
7F
5E
6E
5B
6B
8578
8833
74LS 175
74LS 257
74LS 155
CERN AUTOLOAD
NORSK DATA A.S
Oslo, Norway
322637
3015
5A 76
Page 1 of 2
AL 25/02/80
PSH

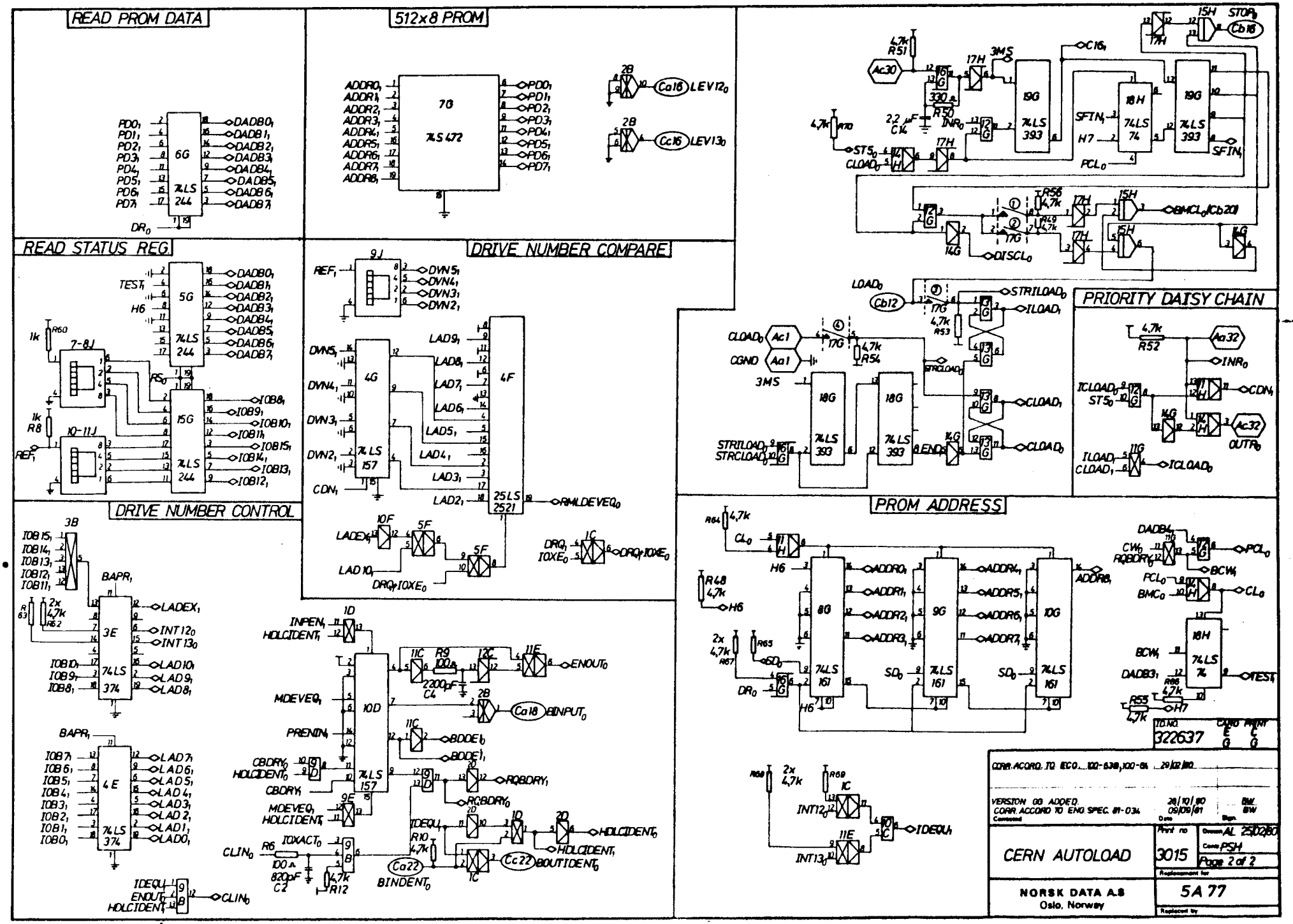
READ PROM DATA
512x8 PROM
READ STATUS REG
DRIVE NUMBER COMPARE
DRIVE NUMBER CONTROL
PRIORITY DAISY CHAIN
PROM ADDRESS
CERN AUTOLOAD
NORSK DATA A.S
Oslo, Norway
322637
3015
5A 77
Page 2 of 2

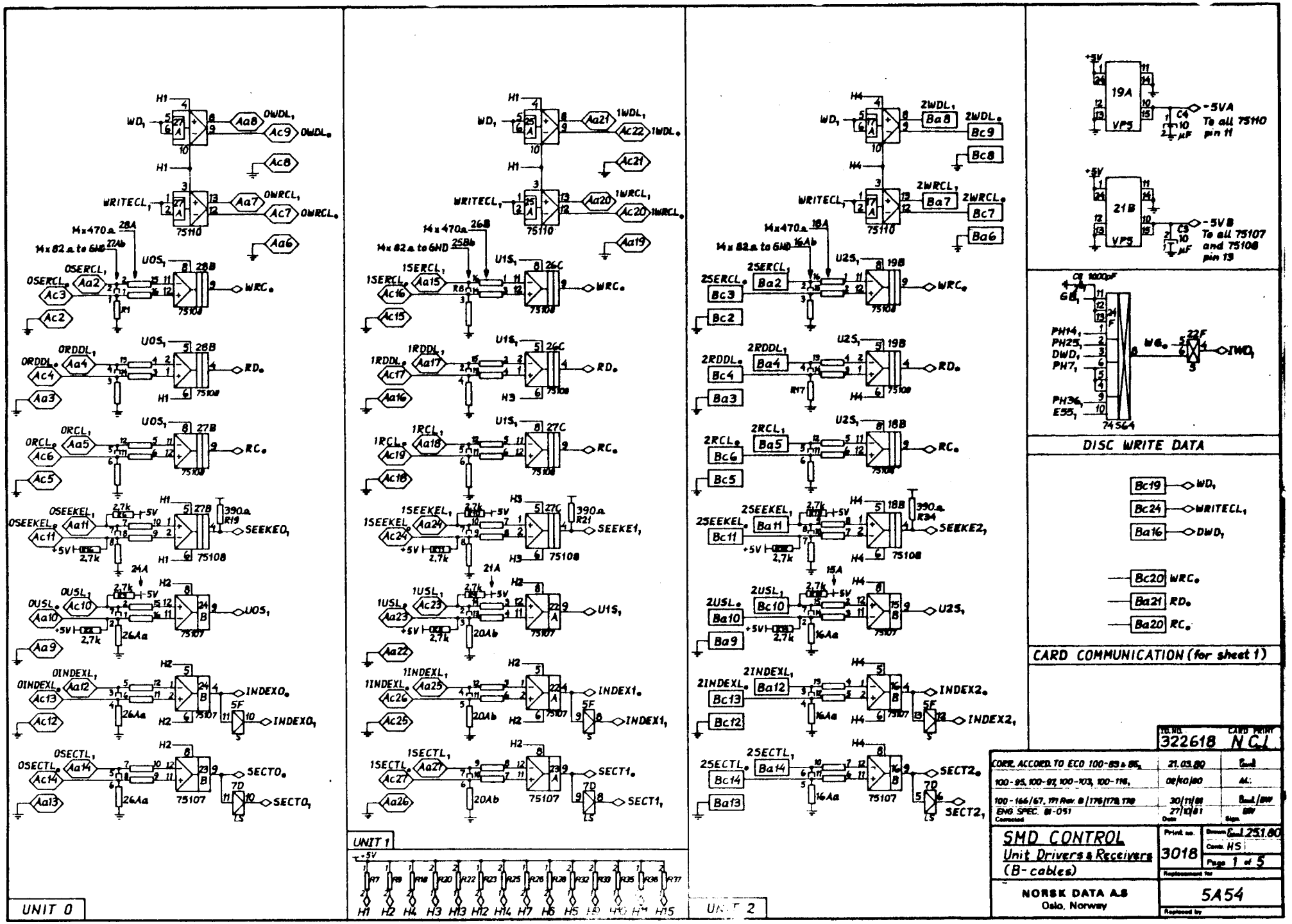
UNIT 0
UNIT 1
UNIT 2
DISC WRITE DATA
CARD COMMUNICATION (for sheet 1)
SMD CONTROL
Unit Drivers & Receivers
(B-cables)
3018
NORSK DATA A.S
Oslo, Norway
5A54
322618
NCL
Page 1 of 5

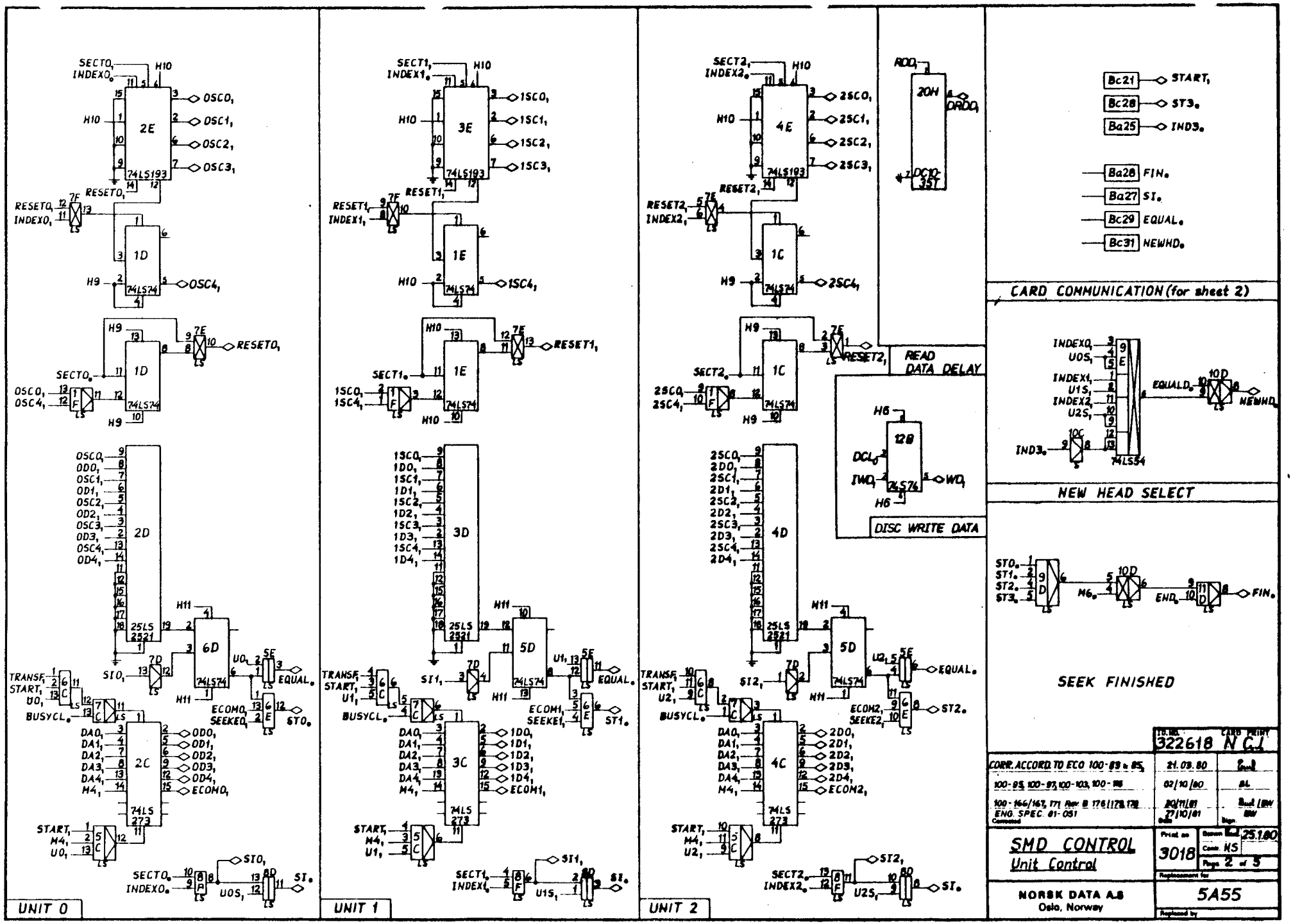
UNIT 0
UNIT 1
UNIT 2
CARD COMMUNICATION (for sheet 2)
NEW HEAD SELECT
SEEK FINISHED
READ DATA DELAY
DISC WRITE DATA
Bc21 START,
Bc28 ST3.
Ba25 IND3.
Ba28 FIN.
Ba27 SI.
Bc29 EQUAL.
Bc31 NEWHD.
74LS193
74LS74
25LS 2521
74LS 273
74LS54
SMD CONTROL
Unit Control
NORSK DATA A.S
Oslo, Norway
322618 N C.1
3018
5A55
Page 2 of 5

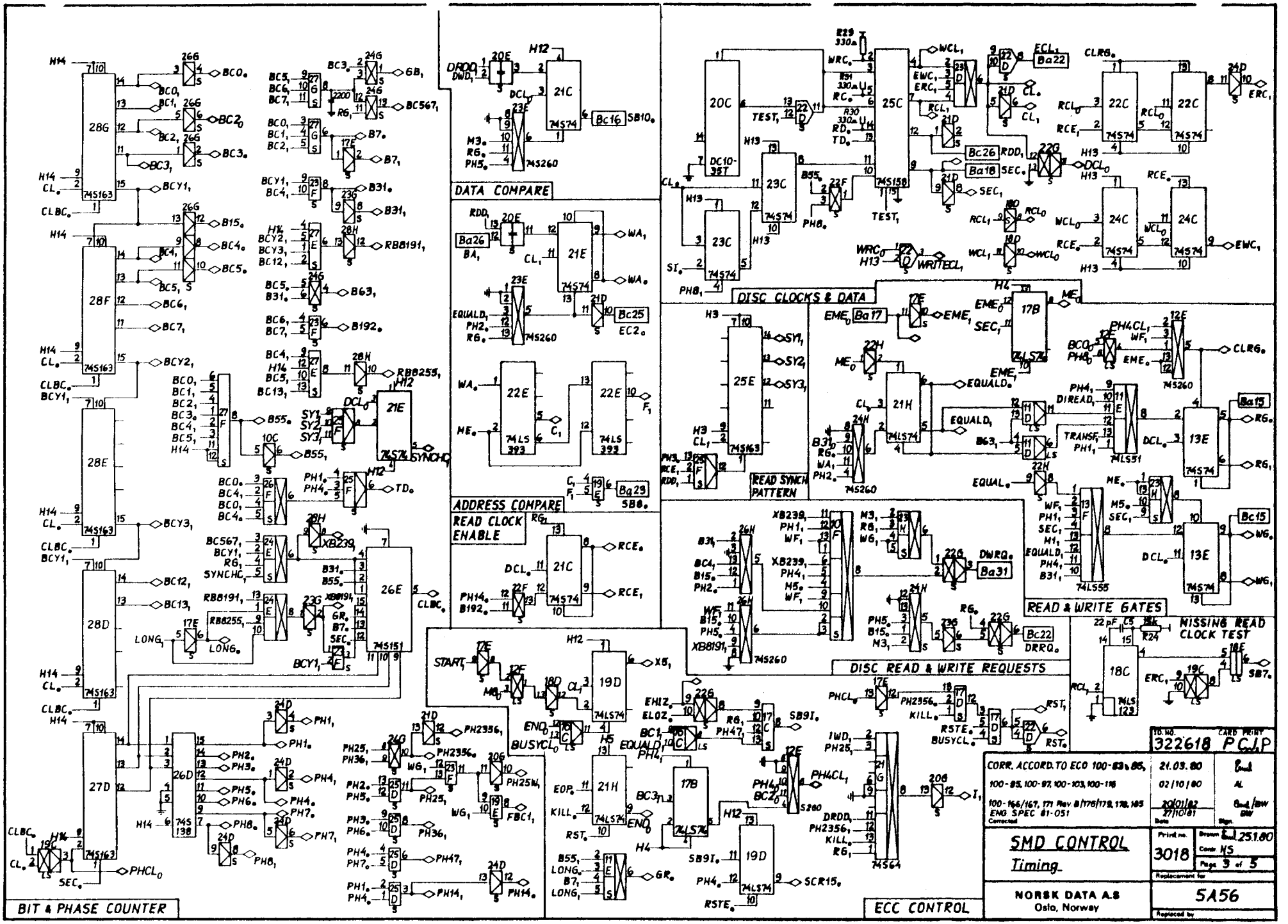
BIT & PHASE COUNTER
DATA COMPARE
ADDRESS COMPARE
READ CLOCK ENABLE
DISC CLOCKS & DATA
READ SYNCH PATTERN
READ & WRITE GATES
MISSING READ CLOCK TEST
DISC READ & WRITE REQUESTS
ECC CONTROL
SMD CONTROL
Timing
NORSK DATA A.S
Oslo, Norway
322618
PCJP
CORR. ACCORD. TO ECO 100-83 & 85,
100-85, 100-97, 100-103, 100-116
100-166/167, 171 Rev B/176/179, 178, 185
ENG SPEC 81-051
Corrected
21.03.80
02/10/80
20/01/82
27/10/81
3018
5A56
Page 3 of 5

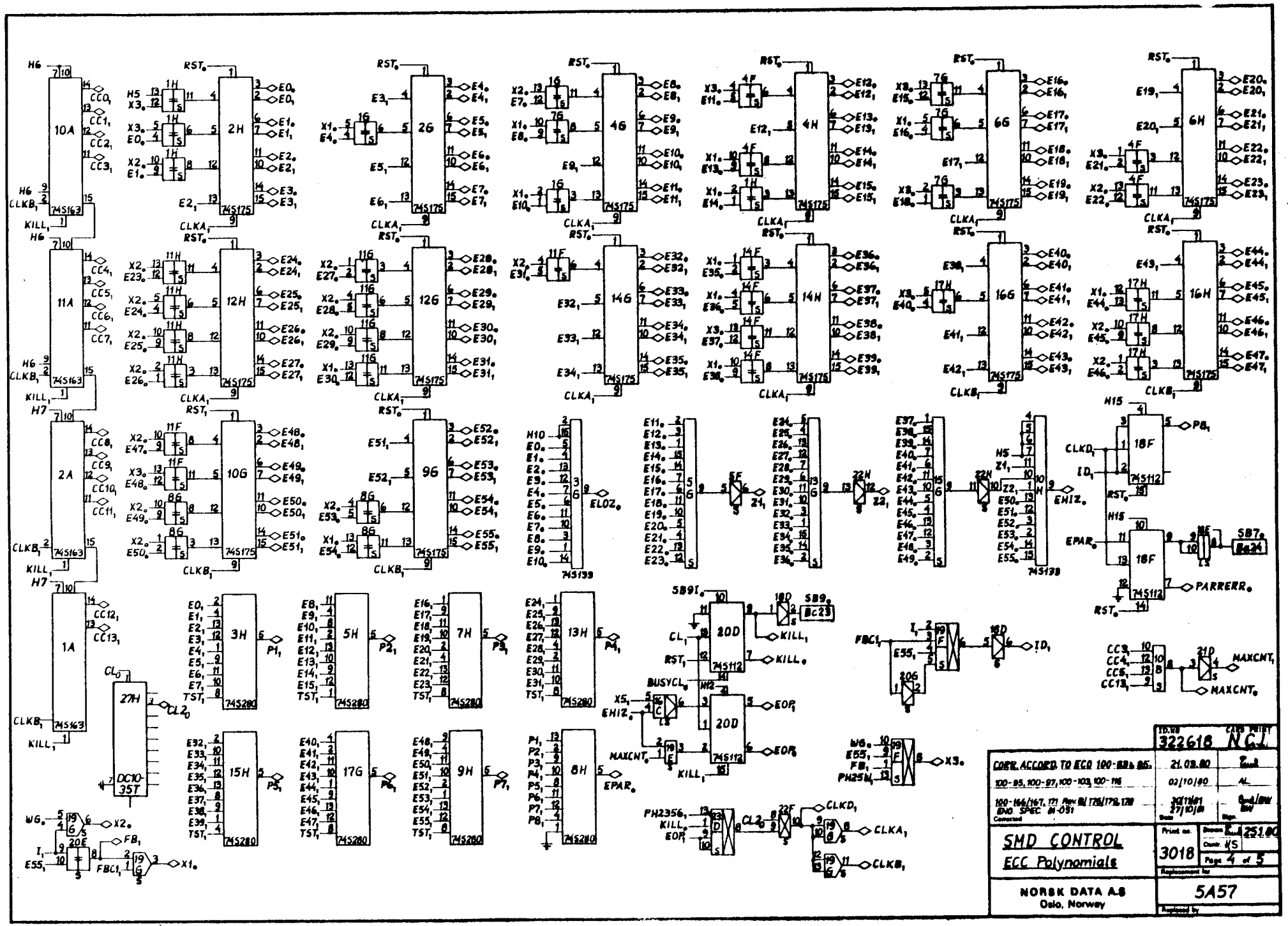
SMD CONTROL
ECC Polynomials
NORSK DATA A.S
Oslo, Norway
322618
NCJ
3018
5A57
Page 4 of 5
251.80

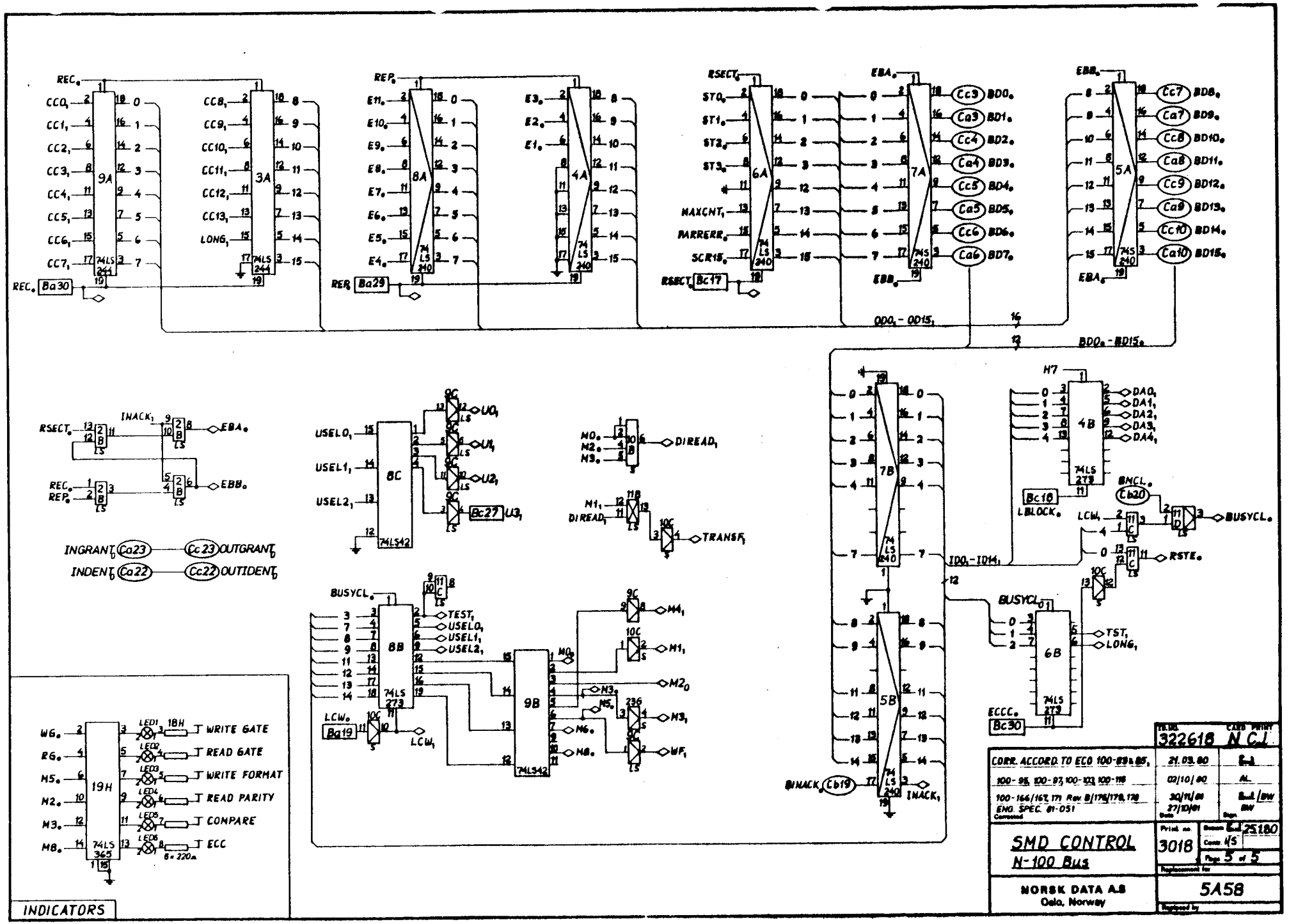
9A
3A
8A
4A
6A
7A
5A
7B
5B
4B
6B
8C
8B
9B
19H
REC.
REP.
RSECT.
EBA.
EBB.
Ba30
Ba29
Bc17
CC0, CC1, CC2, CC3, CC4, CC5, CC6, CC7,
CC8, CC9, CC10, CC11, CC12, CC13, LONG,
E11, E10, E9, E8, E7, E6, E5, E4,
E3, E2, E1,
ST0, ST1, ST2, ST3,
MAXCNT, PARRERR, SCR15,
BD0 BD1 BD2 BD3 BD4 BD5 BD6 BD7
BD8 BD9 BD10 BD11 BD12 BD13 BD14 BD15
OD0 - OD15
BDO - BD15
INACK
EBA
EBB
INGRANT Ca23 Cc23 OUTGRANT
INDENT Ca22 Cc22 OUTIDENT
USELO, USEL1, USEL2
U0 U1 U2 U3
Bc27
M0 M2 M3
DIREAD
M1
TRANSF
BUSYCL
TEST
LCW
Ba19
M4 M5 M6 M8
WF
ID0 - ID14
H7
DA0 DA1 DA2 DA3 DA4
Bc18
LBLOCK
BNCL
Cb20
BUSYCL
RSTE
TST
ECCC
Bc30
Cb19
WG RG M5 M2 M3 M8
LED1 LED2 LED3 LED4 LED5 LED6
18H
WRITE GATE
READ GATE
WRITE FORMAT
READ PARITY
COMPARE
ECC
INDICATORS
322618 N.C.L.
CORR. ACCORD. TO ECO 100-89 & 85
21.03.80
100-95, 100-97, 100-103, 100-118
02/10/80
100-166/167, 171 Rev. B/176/178, 178
ENG. SPEC. 81-051
30/11/81
27/10/81
SMD CONTROL
N-100 Bus
3018
25180
5 of 5
NORSK DATA A.S
Oslo, Norway
5A58

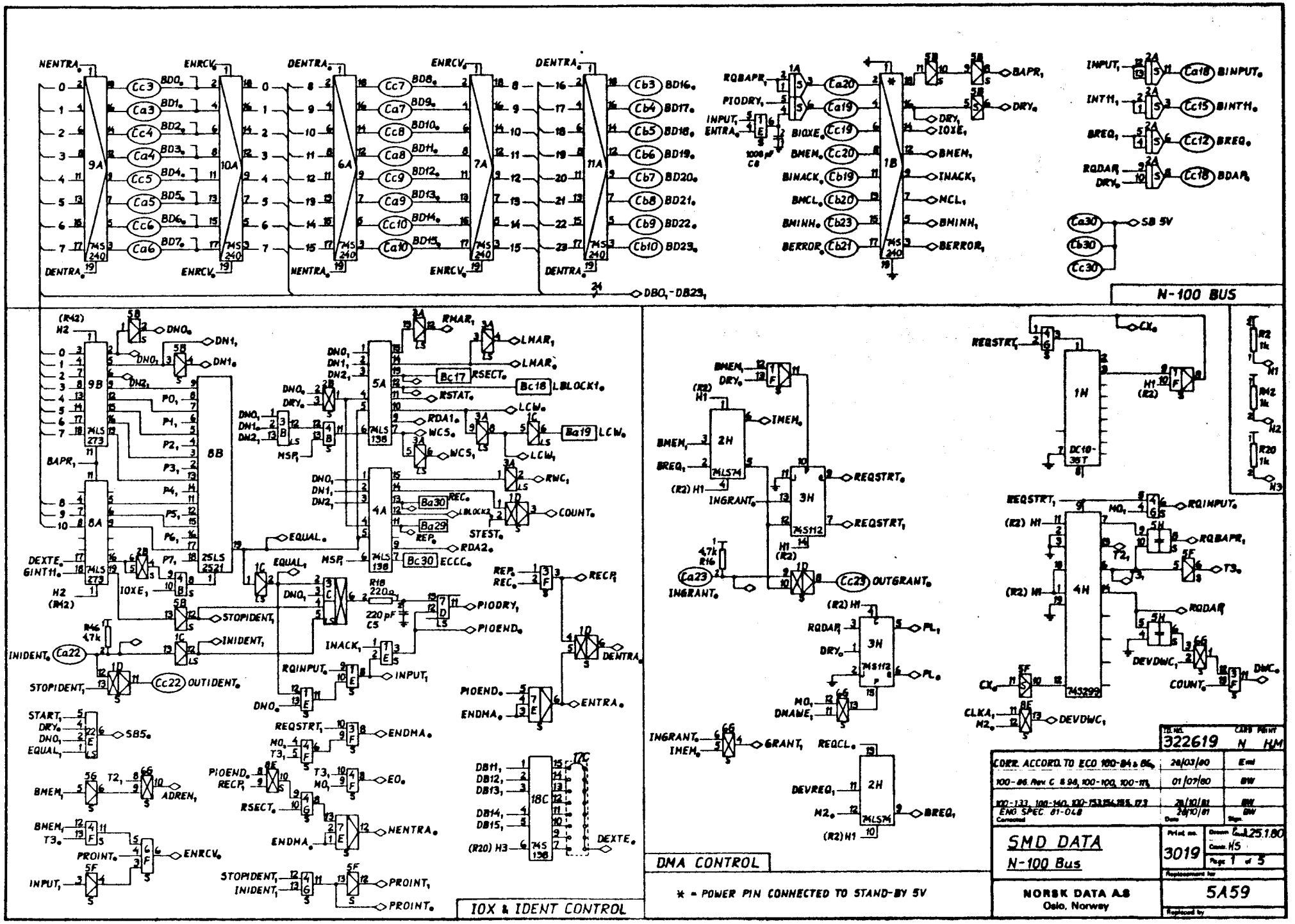
N-100 BUS
IOX & IDENT CONTROL
DMA CONTROL
* = POWER PIN CONNECTED TO STAND-BY 5V
SMD DATA
N-100 Bus
NORSK DATA AS
Oslo, Norway
322619
3019
5A59
COPY ACCORD. TO ECO 100-84 & 86
100-96 Rev C & 94, 100-100, 100-113
100-133, 100-140, 100-153, 154, 155, 173
ENG SPEC 81-018
Corrected
Drawn
Check
Page 1 of 5
Replacement for
Replaced by

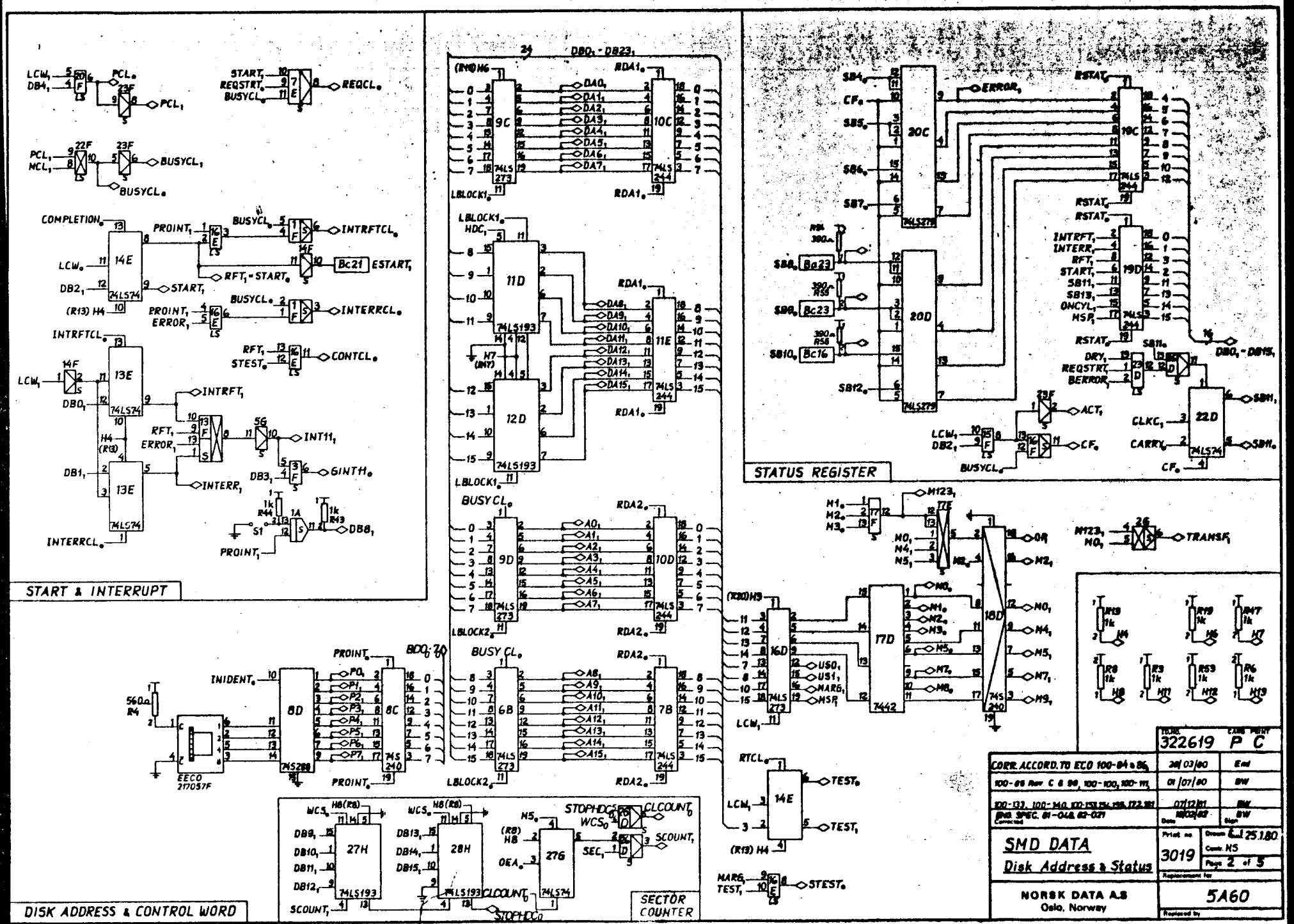
START & INTERRUPT
STATUS REGISTER
DISK ADDRESS & CONTROL WORD
SECTOR COUNTER
SMD DATA
Disk Address & Status
NORSK DATA A.S
Oslo, Norway
322619
P C
3019
5A60
Page 2 of 5

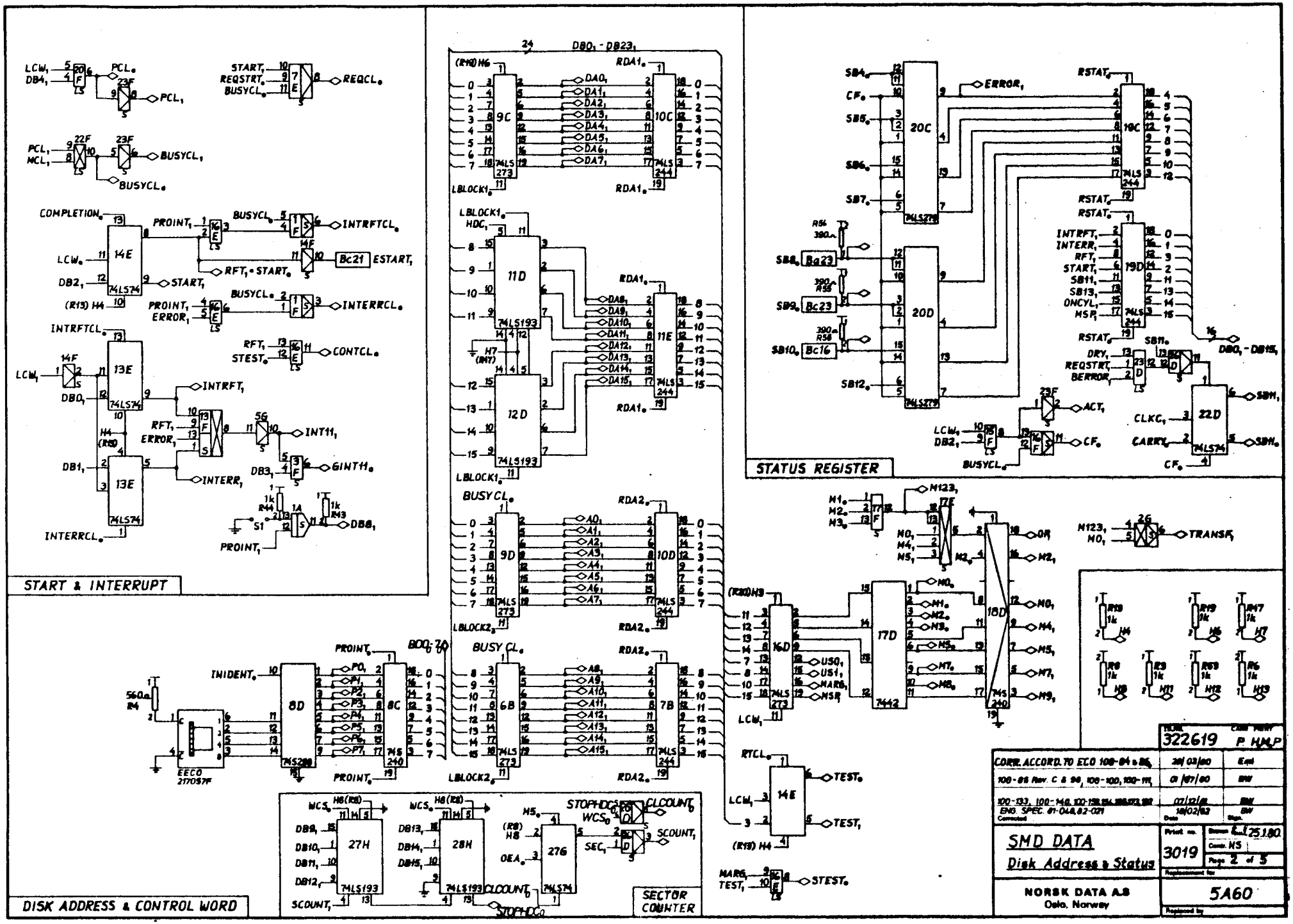
START & INTERRUPT
STATUS REGISTER
DISK ADDRESS & CONTROL WORD
SECTOR COUNTER
DB0₁ - DB23₁
DB0₁ - DB15₁
SMD DATA
Disk Address & Status
NORSK DATA A.S
Oslo, Norway
322619
P HMP
CORR. ACCORD. TO ECO 108-84 & 85
108-88 Rev. C & 98, 108-100, 100-111
100-133, 100-148, 100-158, 154, 168, 173, 182
ENG. SPEC. 81-048, 82-021
3019
5A60
Page 2 of 5

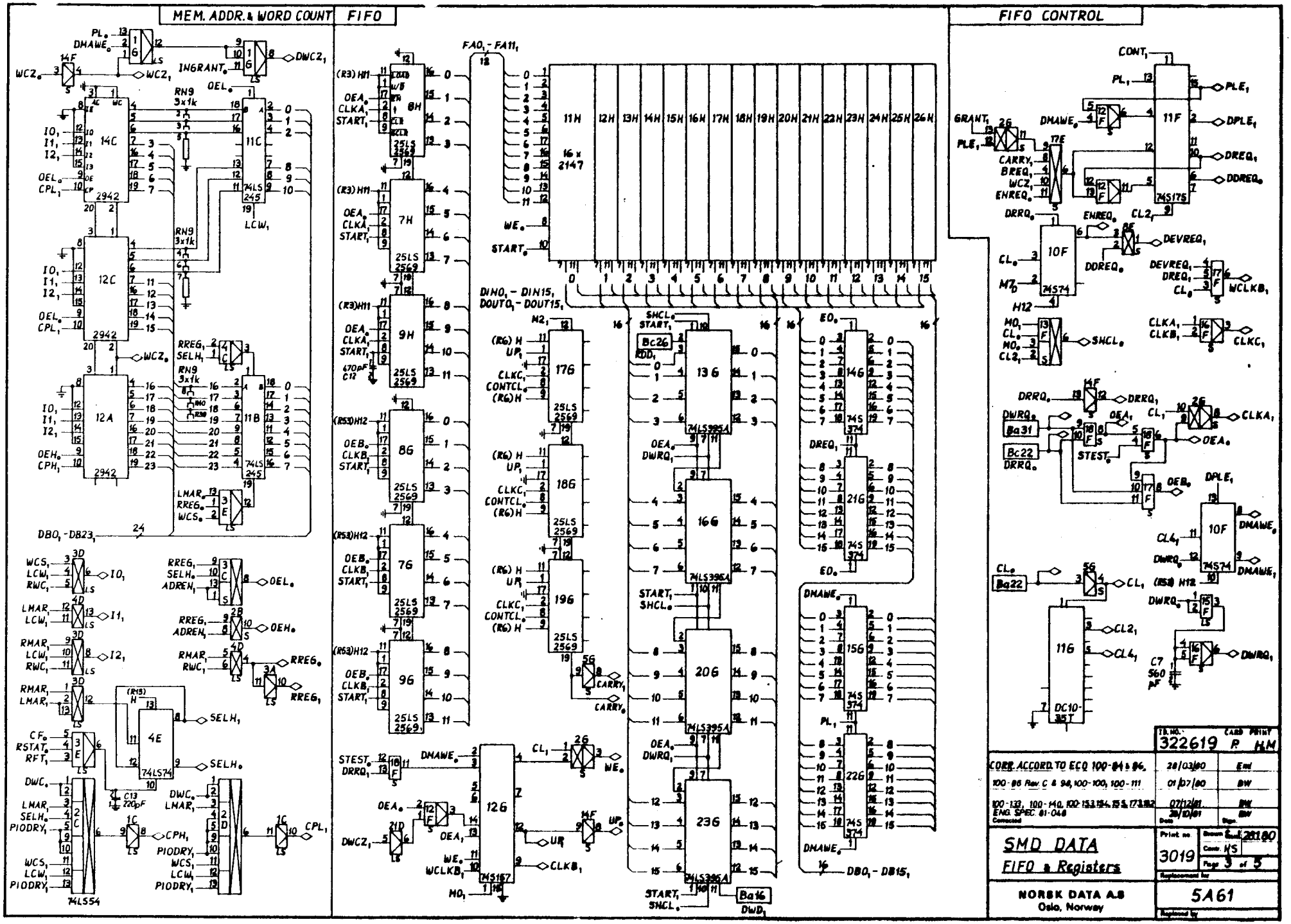
MEM. ADDR.& WORD COUNT
FIFO
FIFO CONTROL
14C
2942
11C
74LS 245
LCW1
12C
12A
11B
RN9 3x1k
RREG1
SELH1
LMAR0
RREG0
WCS0
DB01 - DB23
WCS1
LCW1
RWC1
IO1
ADREN1
OEL0
LMAR1
OEH0
RMAR1
RREG6
RREG1
CF0
RSTAT0
RFT1
4E
74LS74
SELH0
DWC0
LMAR1
SELH0
PIODRY1
C13 220pF
1C
CPH1
CPL1
WCS1
LCW1
PIODRY1
74LS54
8H
7H
9H
8G
7G
9G
25LS 2569
470pF C12
FA01 - FA11
11H
16 x 2147
WE0
START0
DIN01 - DIN15
DOUT01 - DOUT15
17G
18G
19G
13G
14G
16G
20G
23G
15G
22G
74LS395A
74LS 374
Bc26
Ba16
DWD1
DB01 - DB15
STEST0
DRRQ1
DMAWE0
CL1
WE0
OEA0
DWC21
12G
74S167
WCLKB1
MO1
UP0
CLKB1
CARRY1
CARRY0
CONT1
PL1
GRANT1
PLE1
DPLE1
DREQ1
DDREQ0
CARRY1
BREQ1
WCZ1
ENREQ0
DRRQ0
CL2
10F
74S74
DEVREQ1
DDREQ0
WCLKB1
CLKA1
CLKB1
CLKC1
SHCL0
Ba31
Bc22
Ba22
STEST0
OEB0
CLKA1
OEA0
DPLE1
DMAWE0
CL4
DWRQ0
DMAWE1
11G
DC10-35T
C7 560 pF
DWRQ1
TR.NO. 322619
CARD PRINT P H.M
CORR. ACCORD. TO ECO 100-84 & 86.
100-86 Rev C & 94, 100-100, 100-111
100-133, 100-140, 100-153, 154, 155, 173, 182
ENG. SPEC. 81-048
Corrected
28/03/80 Emi
01/07/80 BW
07/12/81 BW
28/10/81 BW
SMD DATA
FIFO & Registers
Print no. 3019
Drawn Emi 28/1/80
Contr. HS
Page 3 of 5
NORSK DATA A.S
Oslo, Norway
5A61

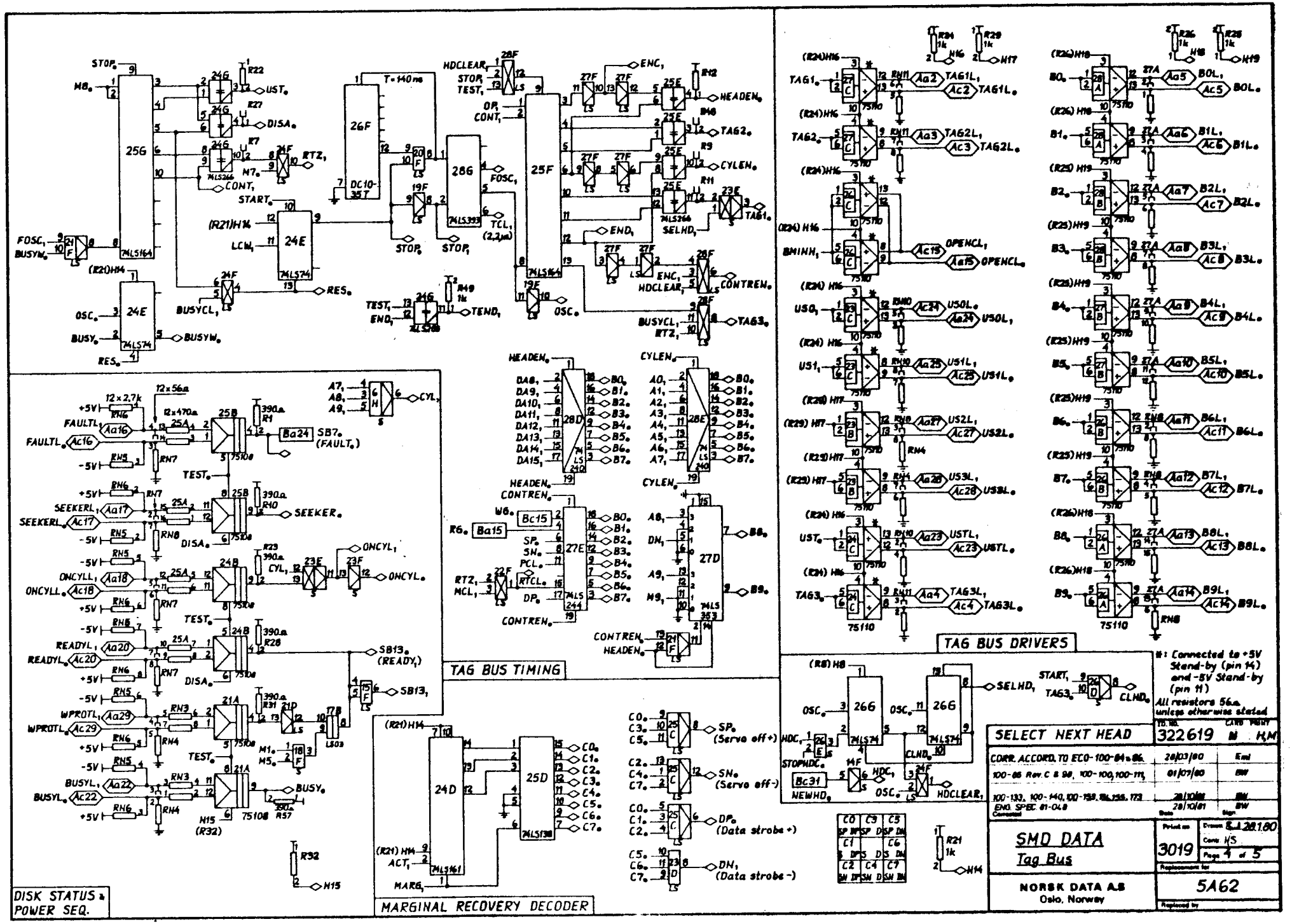
TAG BUS TIMING
TAG BUS DRIVERS
DISK STATUS & POWER SEQ.
MARGINAL RECOVERY DECODER
SELECT NEXT HEAD
SMD DATA
Tag Bus
NORSK DATA A.S
Oslo, Norway
322619
5A62
3019
Page 4 of 5
All resistors 56Ω unless otherwise stated

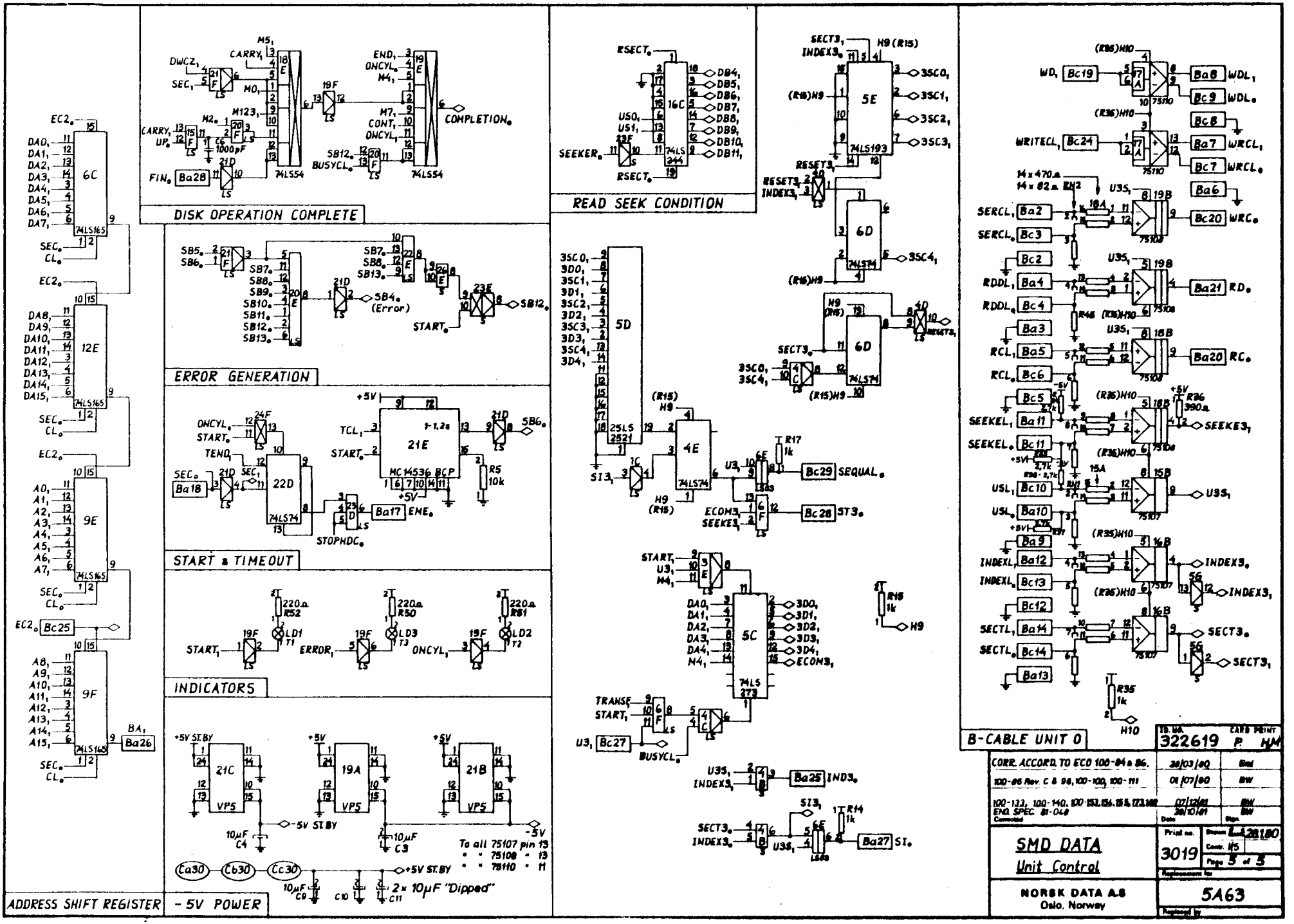
ADDRESS SHIFT REGISTER
DISK OPERATION COMPLETE
ERROR GENERATION
START & TIMEOUT
INDICATORS
- 5V POWER
READ SEEK CONDITION
B-CABLE UNIT 0
SMD DATA
Unit Control
NORSK DATA A.S
Oslo, Norway
322619
3019
5A63

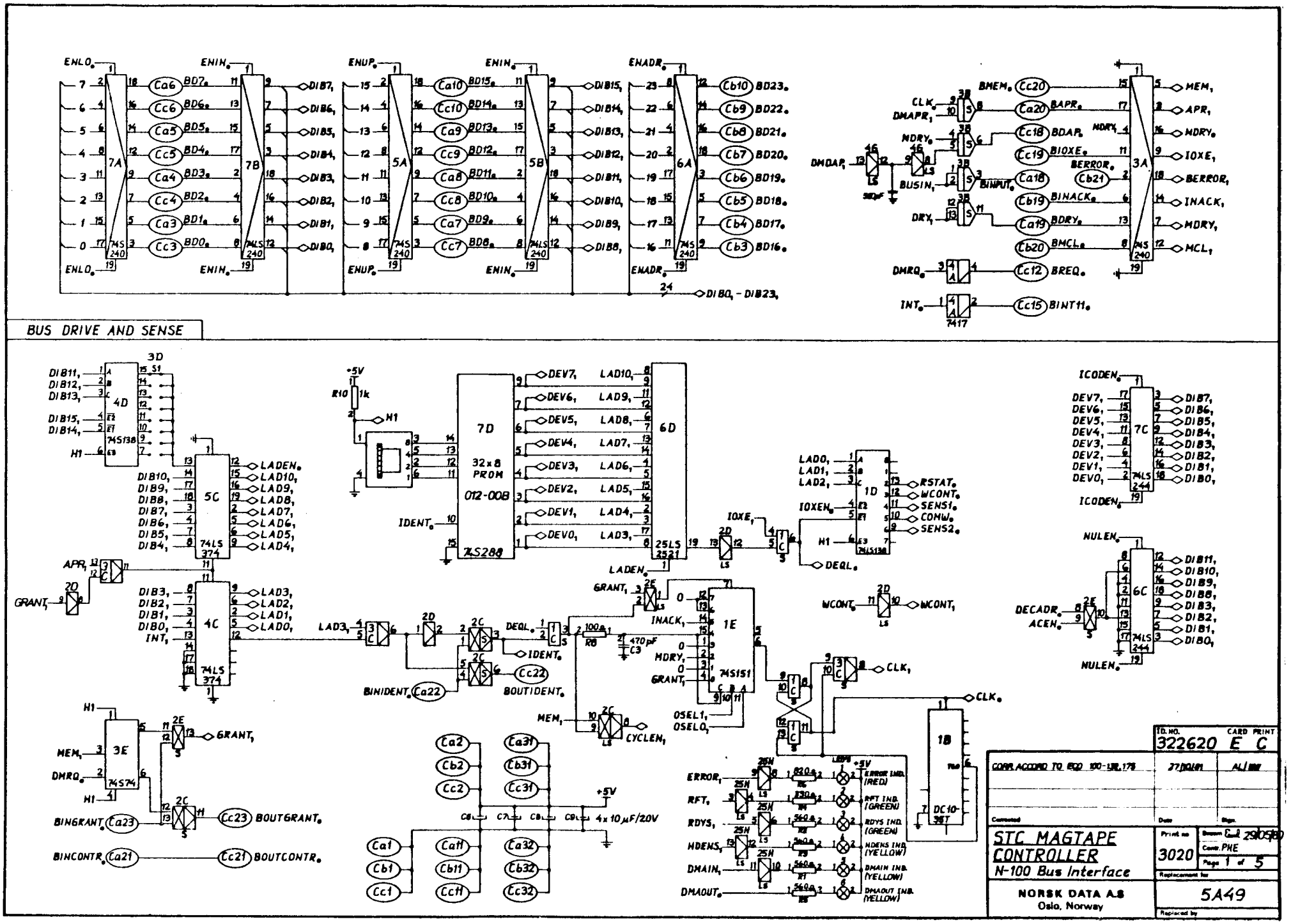
BUS DRIVE AND SENSE
STC MAGTAPE CONTROLLER
N-100 Bus Interface
NORSK DATA A.S
Oslo, Norway
322620
E C
3020
5A49
PHE
1 of 5

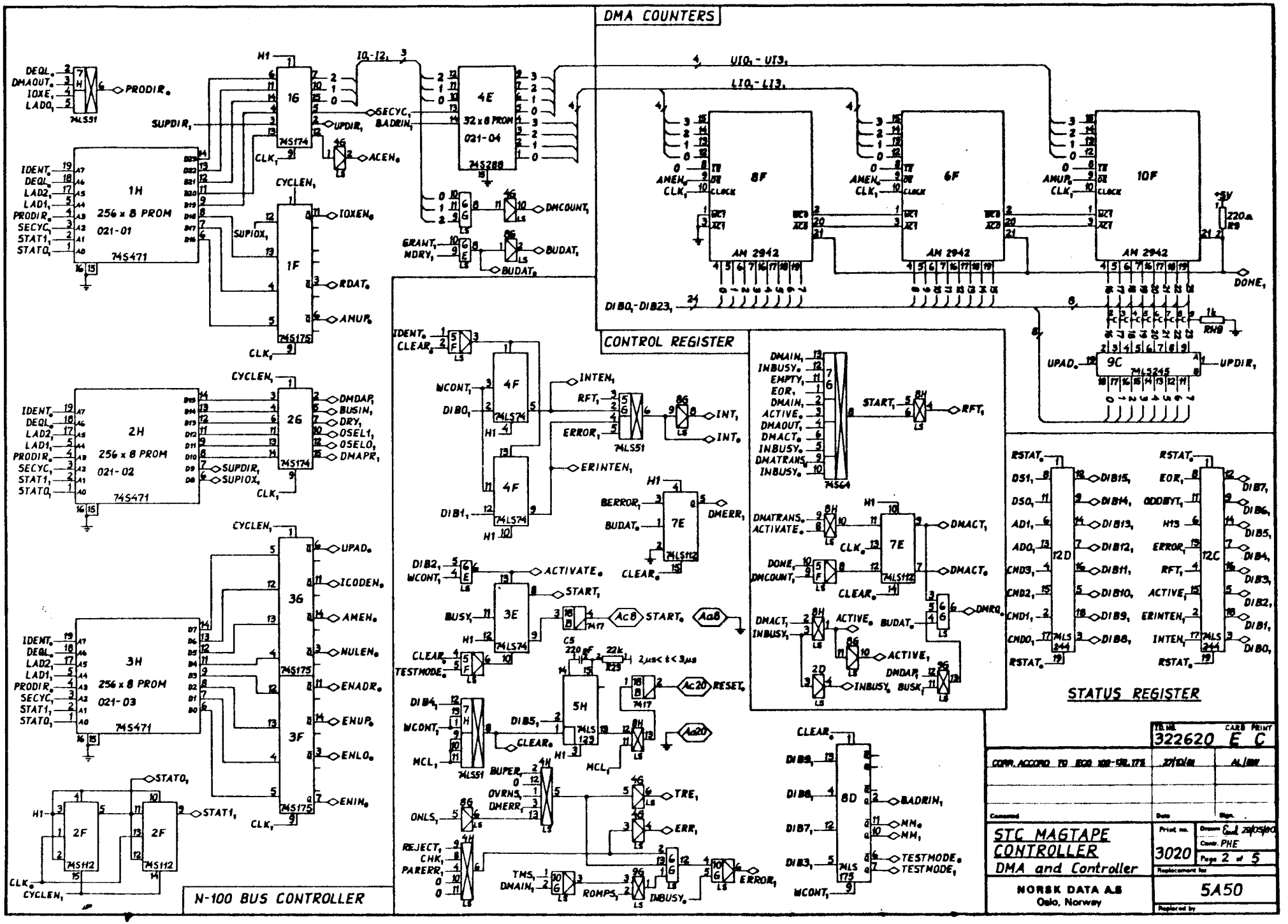
DMA COUNTERS
CONTROL REGISTER
STATUS REGISTER
N-100 BUS CONTROLLER
1H 256 x 8 PROM 021-01 74S471
2H 256 x 8 PROM 021-02 74S471
3H 256 x 8 PROM 021-03 74S471
4E 32 x 8 PROM 021-04 74S288
8F AM 2942
6F AM 2942
10F AM 2942
9C 74LS245
12D 74LS244
12C 74LS244
8D 74LS175
STC MAGTAPE CONTROLLER
DMA and Controller
NORSK DATA A.S
Oslo, Norway
322620
3020
5A50

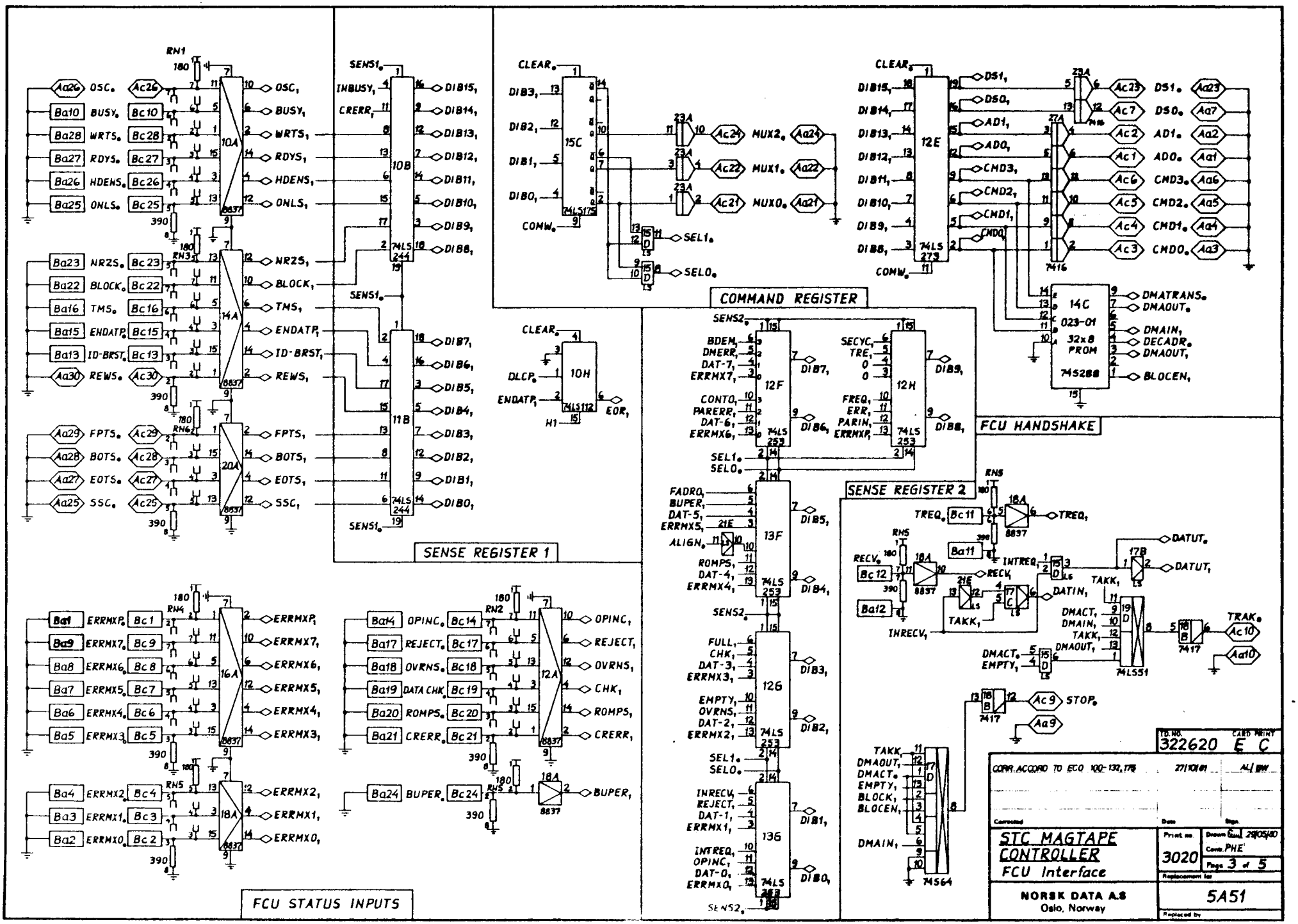
SENSE REGISTER 1
COMMAND REGISTER
FCU HANDSHAKE
SENSE REGISTER 2
FCU STATUS INPUTS
STC MAGTAPE CONTROLLER
FCU Interface
NORSK DATA A.S
Oslo, Norway
322620
5A51
3020
Page 3 of 5

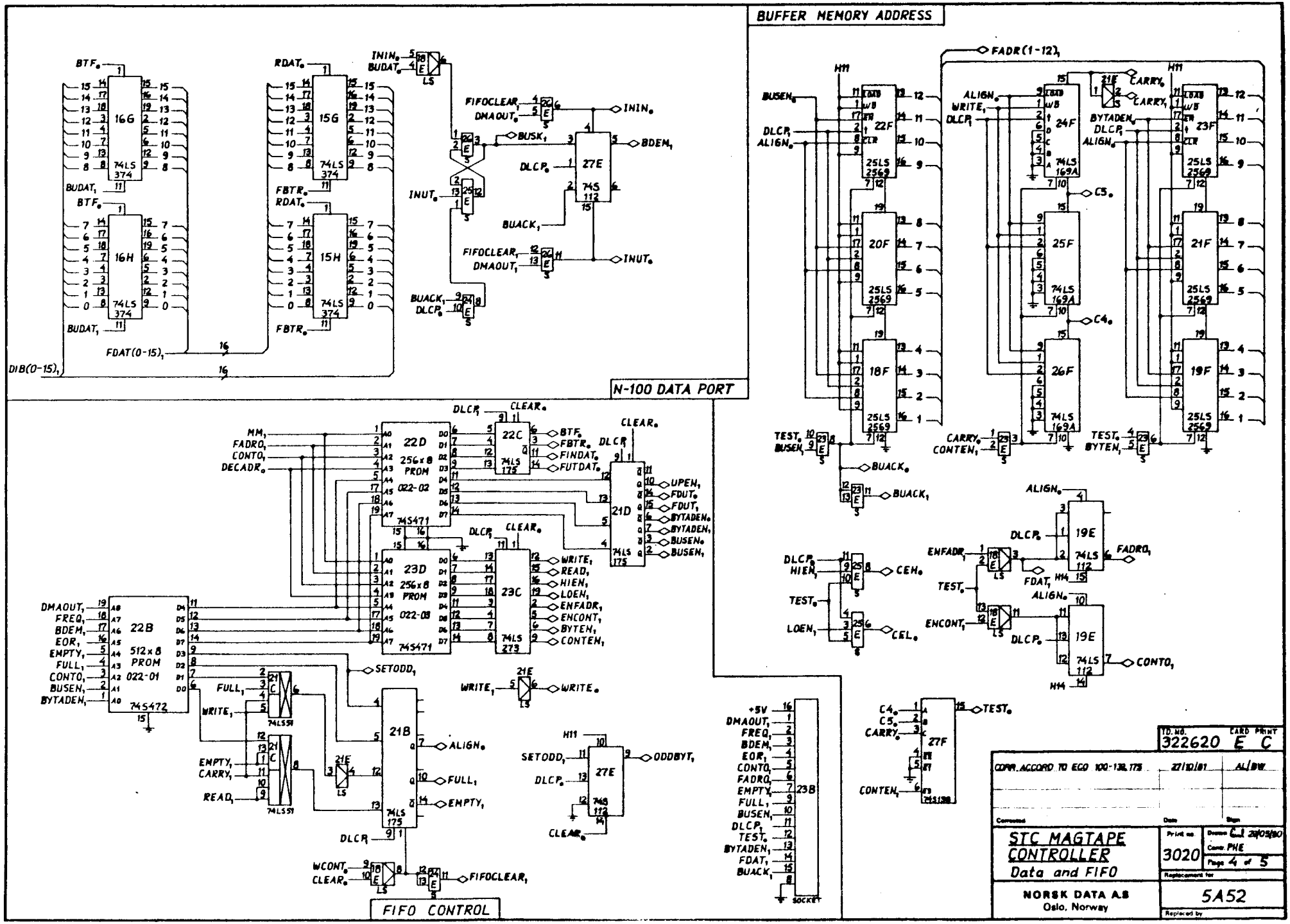
BUFFER MEMORY ADDRESS
N-100 DATA PORT
FIFO CONTROL
16G
15G
16H
15H
74LS 374
27E
745 112
22F
20F
18F
24F
25F
26F
23F
21F
19F
25LS 2569
74LS 169A
22D
256x8 PROM
022-02
745471
23D
256x8 PROM
022-03
22C
74LS 175
21D
23C
22B
512x8 PROM
022-01
745472
74LS 273
21B
74LS 175
74LS 51
19E
74LS 112
27F
745138
23B
SOCKET
FADR(1-12)
TD.NO. 322620
CARD PRINT E C
COPR. ACCORD TO ECO 100-138.175
27/10/81
AL/BW
STC MAGTAPE CONTROLLER
Data and FIFO
Print no 3020
Page 4 of 5
Replacement for
5A52
Replaced by
NORSK DATA A.S
Oslo, Norway

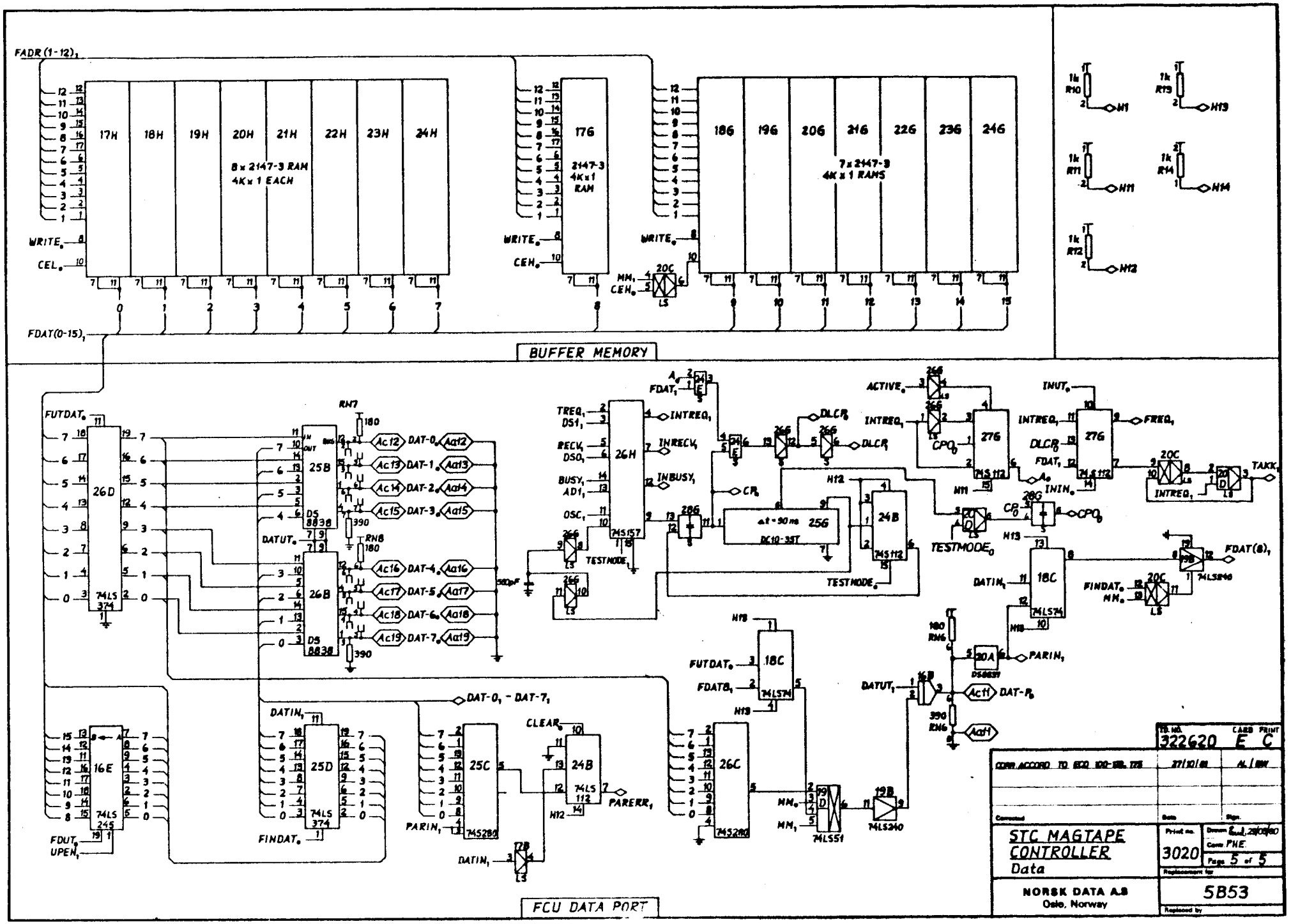
BUFFER MEMORY
FCU DATA PORT
8 x 2147-3 RAM
4K x 1 EACH
2147-3
4K x 1
RAM
7 x 2147-3
4K x 1 RAMS
STC MAGTAPE
CONTROLLER
Data
NORSK DATA A.S
Oslo, Norway
3020
5B53
322620
Page 5 of 5

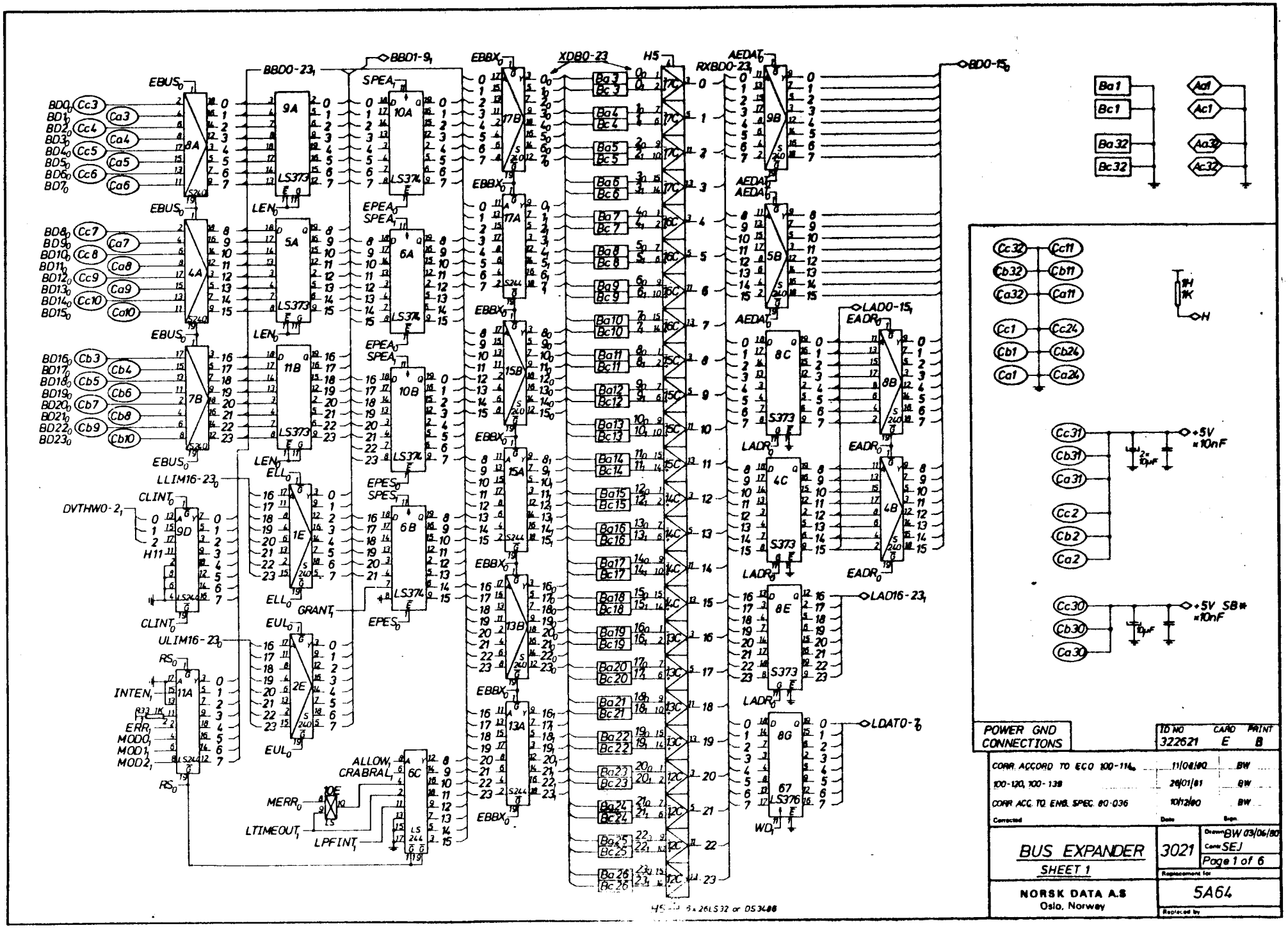
POWER GND CONNECTIONS
TD NO 322621
CARD E
PRINT B
CORR. ACCORD TO ECO 100-114 11/04/80 BW
100-120, 100-139 26/01/81 BW
CORR. ACC. TO ENG. SPEC. 80-036 10/12/80 BW
Corrected Date Sign
BUS EXPANDER
SHEET 1
3021
Drawn BW 03/06/80
Cont SEJ
Page 1 of 6
Replacement for
NORSK DATA A.S
Oslo, Norway
5A64
Replaced by

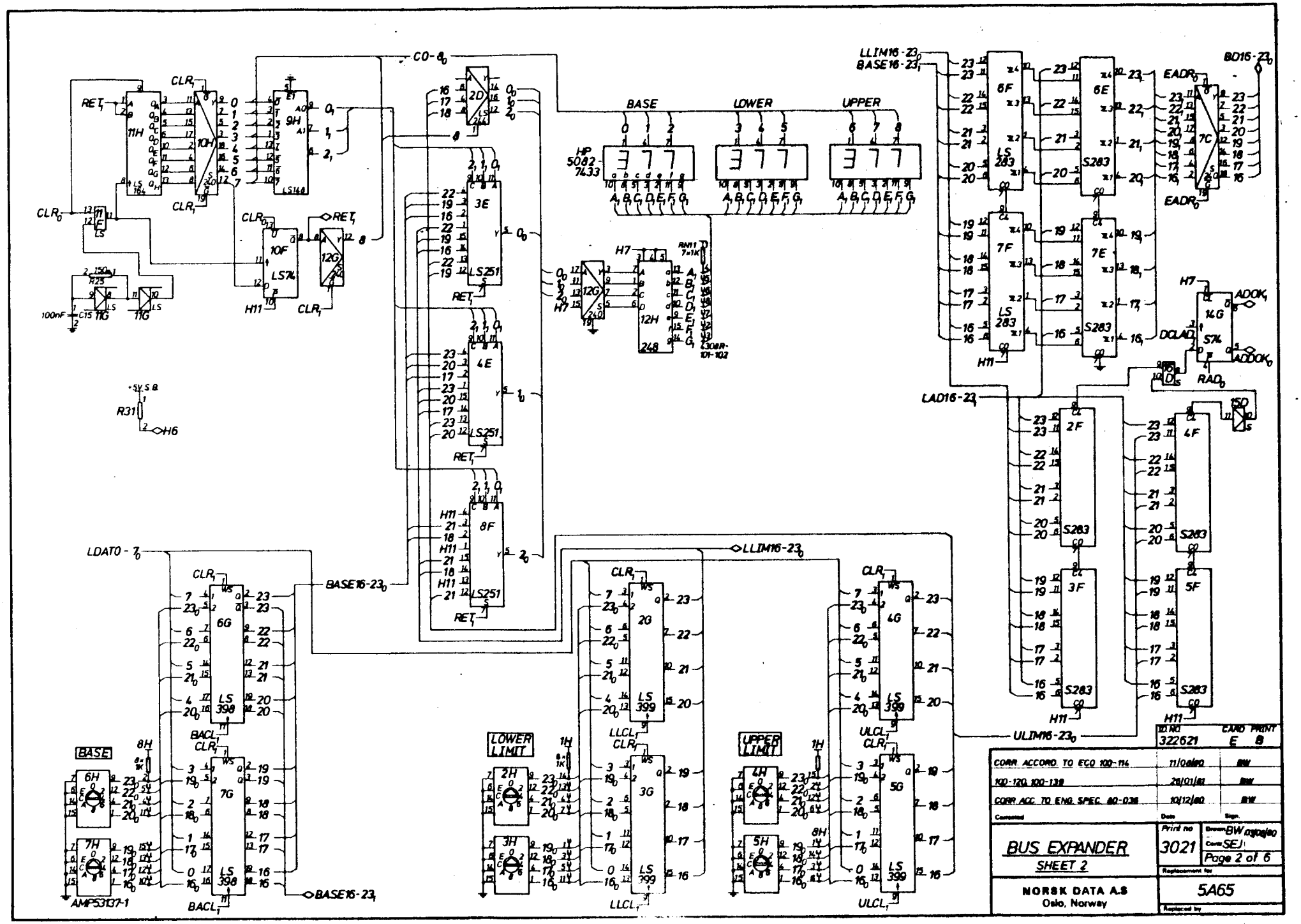
BUS EXPANDER
SHEET 2
NORSK DATA A.S
Oslo, Norway
3021
Page 2 of 6
5A65
322621
E 8
CORR. ACCORD. TO ECO 100-114
100-120, 100-139
CORR. ACC. TO ENG. SPEC. 80-038
BASE
LOWER
UPPER
LOWER LIMIT
UPPER LIMIT
CO-8
LLIM16-23
BASE16-23
BO16-23
EADR
LAD16-23
ULIM16-23
LDAT0-7
BACL
LLCL
ULCL
ADOK
DCLAD
RAD
RET
CLR
AMP53137-1

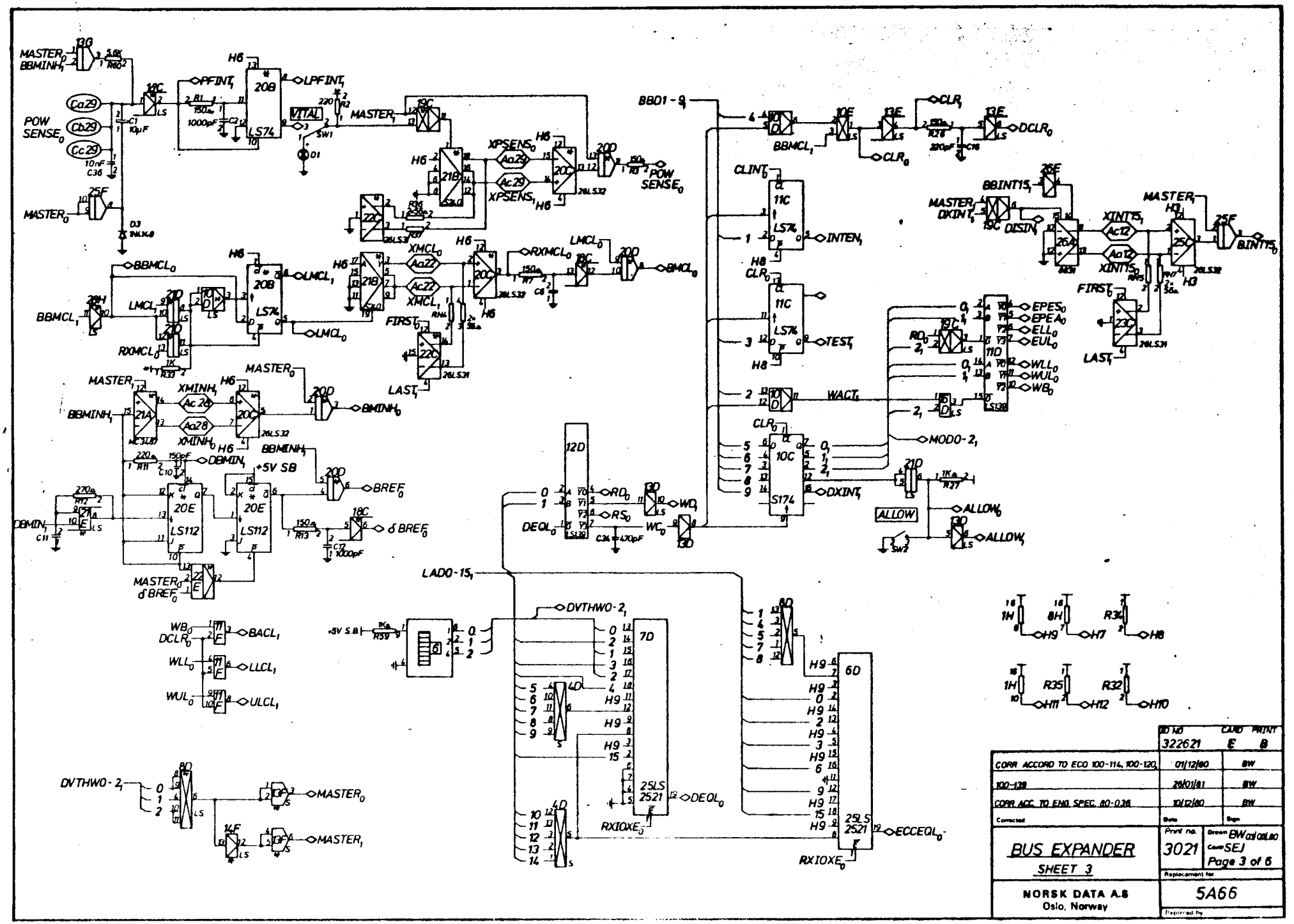

	ID NO	CARD	PRINT
	322621	E	B
CORR ACCORD TO ECO 100-114, 100-120,	01/12/80	BW	
100-139	26/01/81	BW	
CORR ACC. TO ENG. SPEC. 80-036	10/12/80	BW	
Corrected	Date	Sign	

BUS EXPANDER

SHEET 3

Print no. 3021

Drawn BW 01/05/80

Check SEJ

Page 3 of 6

Replacement for

NORSK DATA A.S
Oslo, Norway

5A66

Replaced by

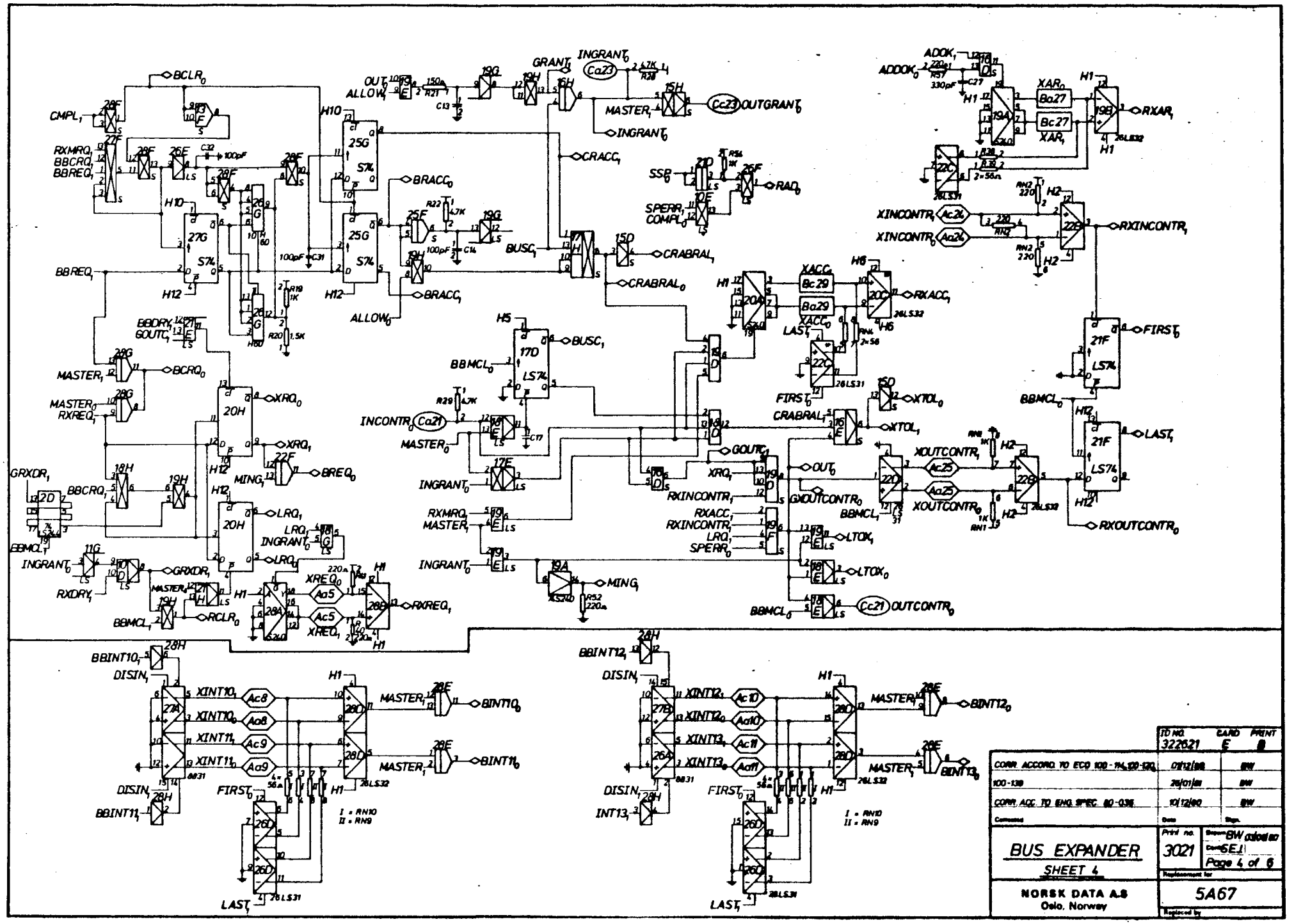
BUS EXPANDER
SHEET 4
NORSK DATA A.S
Oslo, Norway
3021
5A67
Page 4 of 6
CORR. ACCORD. TO ECO 100-114,120-130
CORR. ACC. TO ENG. SPEC. 60-038
I = RN10
II = RN9

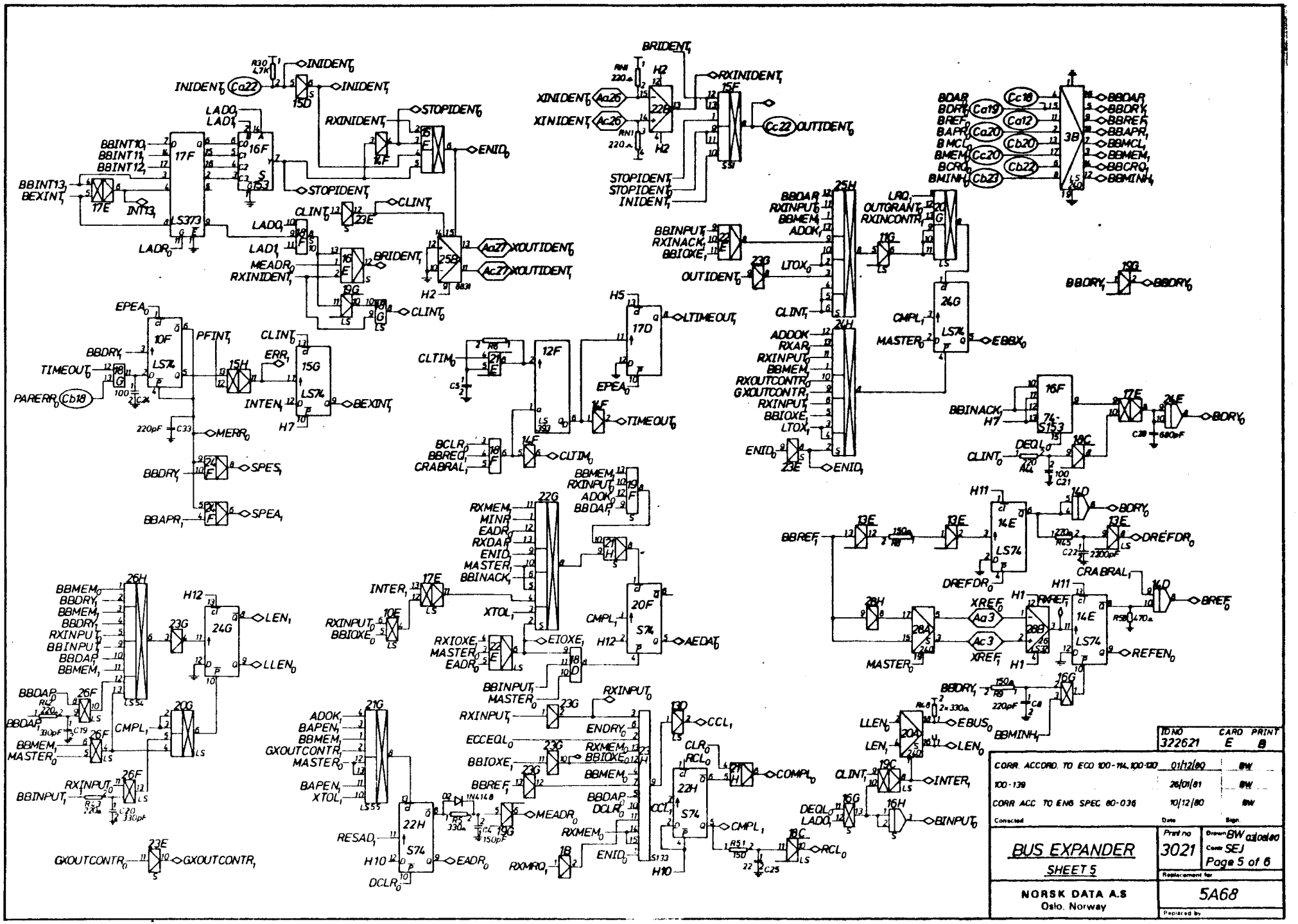
BUS EXPANDER
SHEET 5
NORSK DATA A.S
Oslo, Norway
3021
Page 5 of 6
5A68
3226.21
CORR. ACCORD. TO ECO 100-114, 100-120 01/12/80 BW
100-139 26/01/81 BW
CORR ACC TO ENG SPEC 80-036 10/12/80 BW
Corrected Date Sign.
Drawn BW 03/06/80
Check SEJ

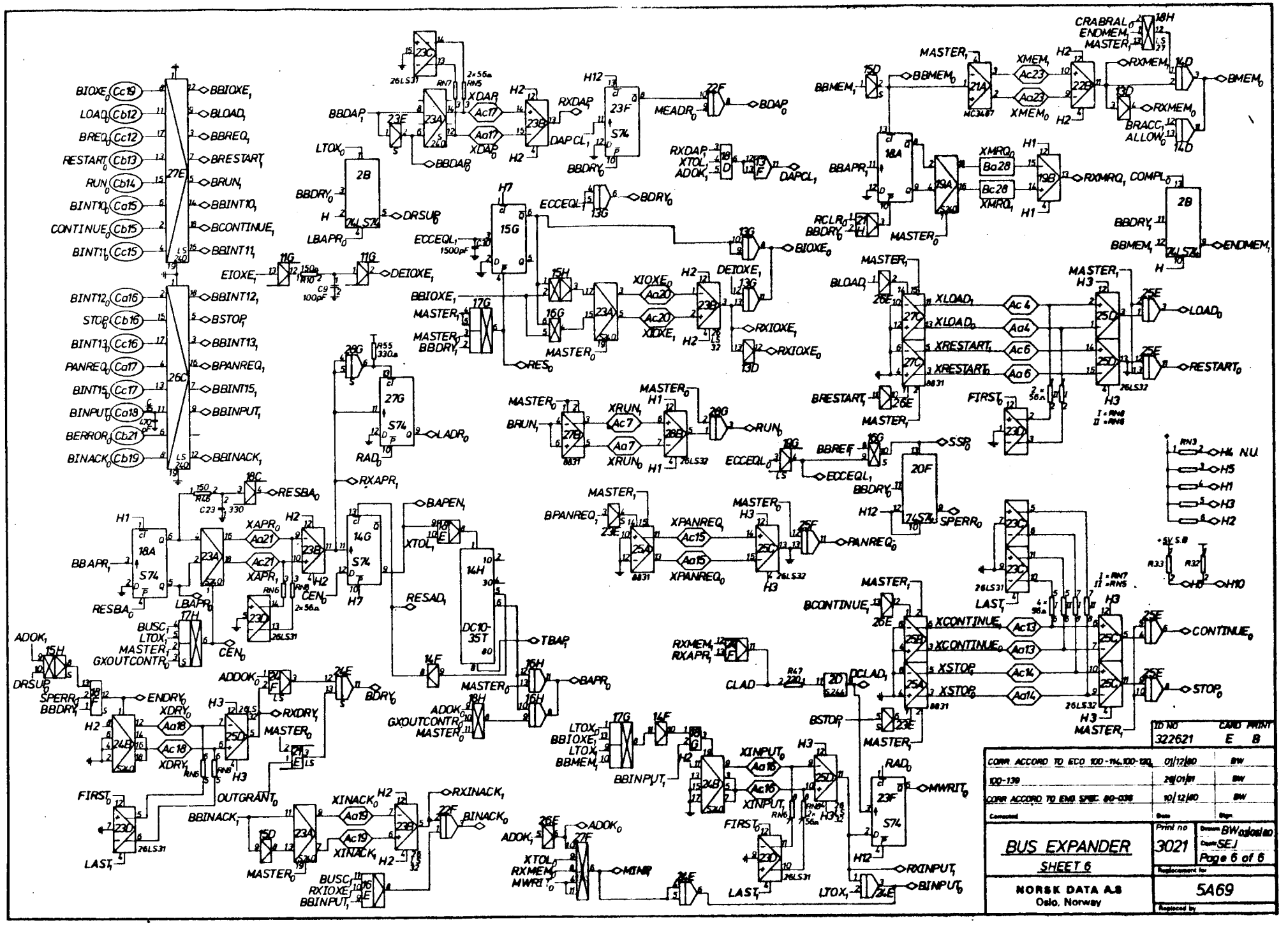
BUS EXPANDER
SHEET 6
NORSK DATA A.S
Oslo, Norway
3021
Page 6 of 6
5A69
322621
CORR ACCORD TO ECO 100-114,100-120
100-139
CORR ACCORD TO ENG SPEC 80-038

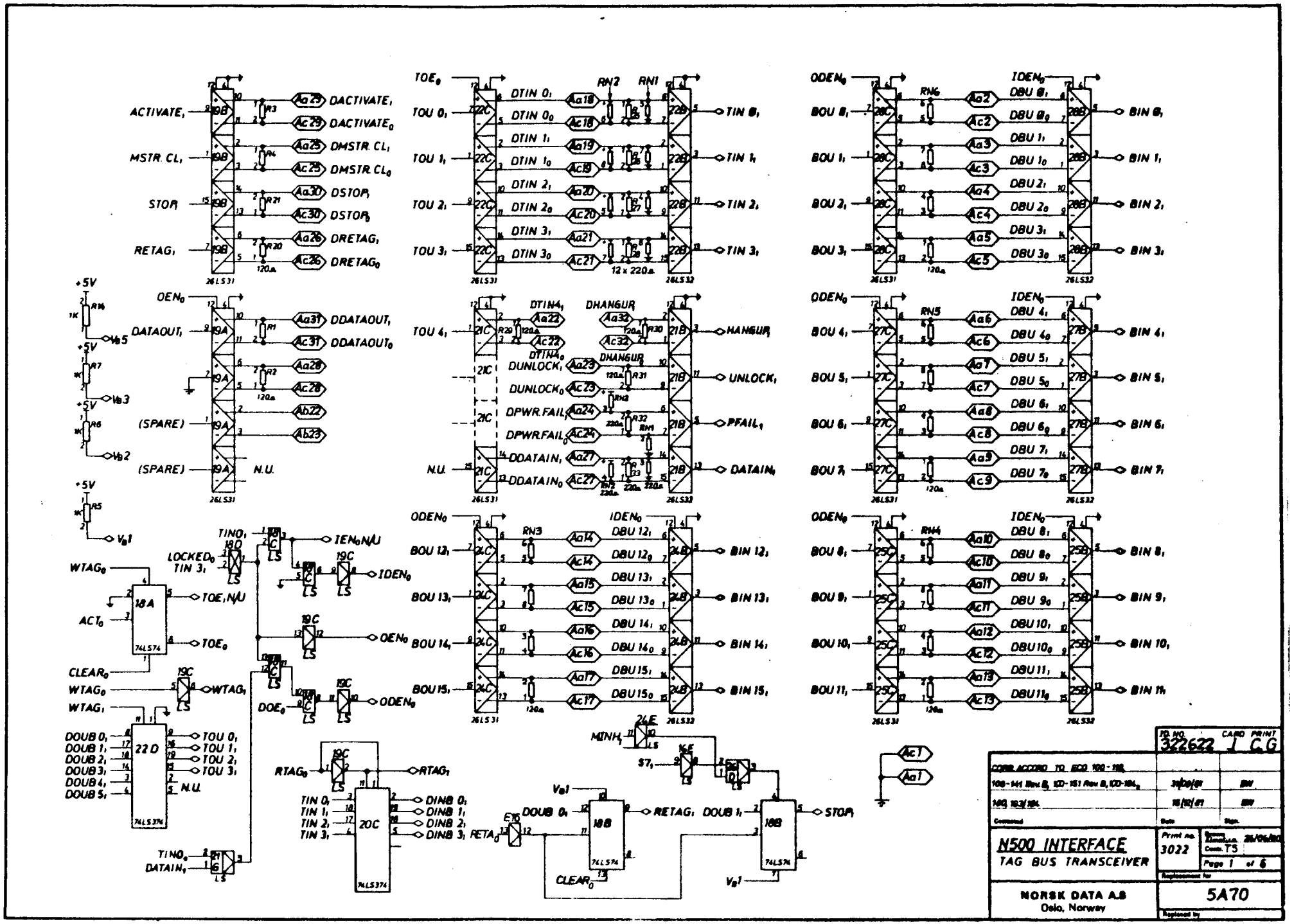
ACTIVATE₁
MSTR. CL₁
STOP₁
RETAG₁
DACTIVATE₁
DACTIVATE₀
DMSTR. CL₁
DMSTR. CL₀
DSTOP₁
DSTOP₀
DRETAG₁
DRETAG₀
TOE₀
TOU 0₁
TOU 1₁
TOU 2₁
TOU 3₁
DTIN 0₁
DTIN 0₀
DTIN 1₁
DTIN 1₀
DTIN 2₁
DTIN 2₀
DTIN 3₁
DTIN 3₀
TIN 0₁
TIN 1₁
TIN 2₁
TIN 3₁
ODEN₀
BOU 0₁
BOU 1₁
BOU 2₁
BOU 3₁
IDEN₀
DBU 0₁
DBU 0₀
DBU 1₁
DBU 1₀
DBU 2₁
DBU 2₀
DBU 3₁
DBU 3₀
BIN 0₁
BIN 1₁
BIN 2₁
BIN 3₁
OEN₀
DATAOUT₁
(SPARE)
N.U.
DDATAOUT₁
DDATAOUT₀
TOU 4₁
DTIN4₁
DTIN4₀
DHANGUP₁
DHANGUP₀
DUNLOCK₁
DUNLOCK₀
DPWR.FAIL₁
DPWR.FAIL₀
DDATAIN₁
DDATAIN₀
HANGUP₁
UNLOCK₁
PFAIL₁
DATAIN₁
BOU 4₁
BOU 5₁
BOU 6₁
BOU 7₁
DBU 4₁
DBU 4₀
DBU 5₁
DBU 5₀
DBU 6₁
DBU 6₀
DBU 7₁
DBU 7₀
BIN 4₁
BIN 5₁
BOU 12₁
BOU 13₁
BOU 14₁
BOU 15₁
DBU 12₁
DBU 12₀
DBU 13₁
DBU 13₀
DBU 14₁
DBU 14₀
DBU 15₁
DBU 15₀
BIN 12₁
BIN 13₁
BIN 14₁
BIN 15₁
BOU 8₁
BOU 9₁
BOU 10₁
BOU 11₁
DBU 8₁
DBU 8₀
DBU 9₁
DBU 9₀
DBU 10₁
DBU 10₀
DBU 11₁
DBU 11₀
BIN 8₁
BIN 9₁
BIN 10₁
BIN 11₁
+5V
Vs5
Vs3
Vs2
Vs1
WTAG₀
ACT₀
CLEAR₀
WTAG₁
TOE, N/U
TOE₀
OEN₀
ODEN₀
IDEN₀
IDEN₀ N/U
DOUB 0₁
DOUB 1₁
DOUB 2₁
DOUB 3₁
DOUB 4₁
DOUB 5₁
TIN 0₁
TIN 1₁
TIN 2₁
TIN 3₁
LOCKED₀
DATAIN₁
RTAG₀
RTAG₁
DINB 0₁
DINB 1₁
DINB 2₁
DINB 3₁
MINH₁
S7₁
RETA₀
STOP₁
Ac1
Aa1
26LS31
26LS32
74LS374
TO NO. 322622
CARD PRINT J. C.G
CORR. ACCORD. TO. ECO 100-118
100-141 Rev B, 100-151 Rev B, 100-184
140, 183/184
N500 INTERFACE
TAG BUS TRANSCEIVER
Print no. 3022
Page 1 of 6
NORSK DATA A.S
Oslo, Norway
5A70

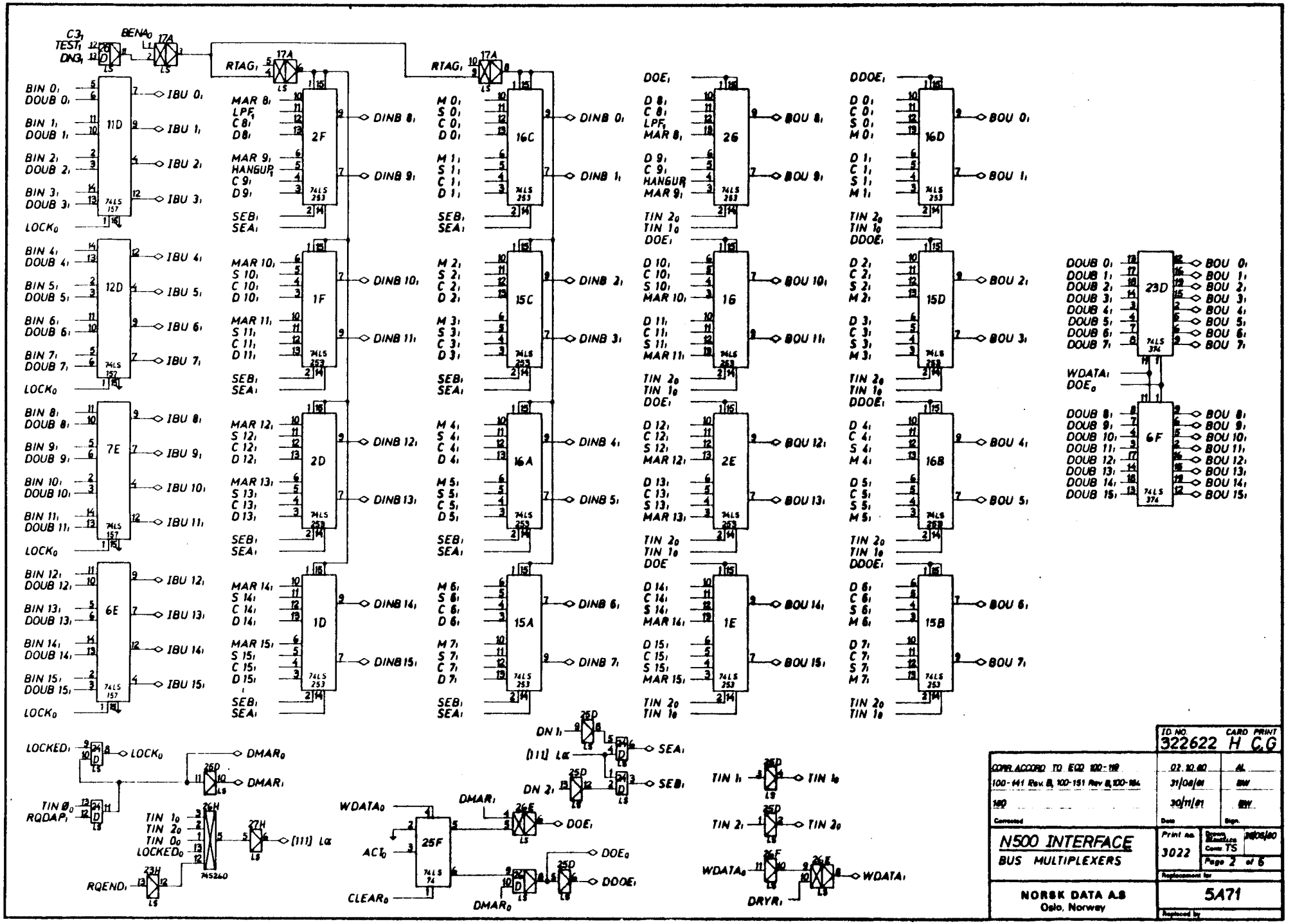
C3, TEST, DN3,
BENA0
17A
RTAG,
11D
12D
7E
6E
74LS 157
LOCK0
BIN 0, DOUB 0, BIN 1, DOUB 1, BIN 2, DOUB 2, BIN 3, DOUB 3,
BIN 4, DOUB 4, BIN 5, DOUB 5, BIN 6, DOUB 6, BIN 7, DOUB 7,
BIN 8, DOUB 8, BIN 9, DOUB 9, BIN 10, DOUB 10, BIN 11, DOUB 11,
BIN 12, DOUB 12, BIN 13, DOUB 13, BIN 14, DOUB 14, BIN 15, DOUB 15,
IBU 0, IBU 1, IBU 2, IBU 3, IBU 4, IBU 5, IBU 6, IBU 7, IBU 8, IBU 9, IBU 10, IBU 11, IBU 12, IBU 13, IBU 14, IBU 15,
2F, 1F, 2D, 1D
74LS 253
MAR 8, LPF, C 8, D 8, MAR 9, HANGUP, C 9, D 9, SEB, SEA,
MAR 10, S 10, C 10, D 10, MAR 11, S 11, C 11, D 11, SEB, SEA,
MAR 12, S 12, C 12, D 12, MAR 13, S 13, C 13, D 13, SEB, SEA,
MAR 14, S 14, C 14, D 14, MAR 15, S 15, C 15, D 15, SEB, SEA,
DINB 8, DINB 9, DINB 10, DINB 11, DINB 12, DINB 13, DINB 14, DINB 15,
16C, 15C, 16A, 15A
M 0, S 0, C 0, D 0, M 1, S 1, C 1, D 1, M 2, S 2, C 2, D 2, M 3, S 3, C 3, D 3, M 4, S 4, C 4, D 4, M 5, S 5, C 5, D 5, M 6, S 6, C 6, D 6, M 7, S 7, C 7, D 7, SEB, SEA,
DINB 0, DINB 1, DINB 2, DINB 3, DINB 4, DINB 5, DINB 6, DINB 7,
26, 16, 2E, 1E
DOE, D 8, C 8, LPF, MAR 8, D 9, C 9, HANGUP, MAR 9, TIN 2, TIN 1, DOE,
D 10, C 10, S 10, MAR 10, D 11, C 11, S 11, MAR 11, TIN 2, TIN 1, DOE,
D 12, C 12, S 12, MAR 12, D 13, C 13, S 13, MAR 13, TIN 2, TIN 1, DOE,
D 14, C 14, S 14, MAR 14, D 15, C 15, S 15, MAR 15, TIN 2, TIN 1,
BOU 8, BOU 9, BOU 10, BOU 11, BOU 12, BOU 13, BOU 14, BOU 15,
16D, 15D, 16B, 15B
DDOE, D 0, C 0, S 0, M 0, D 1, C 1, S 1, M 1, TIN 2, TIN 1, DDOE,
D 2, C 2, S 2, M 2, D 3, C 3, S 3, M 3, TIN 2, TIN 1, DDOE,
D 4, C 4, S 4, M 4, D 5, C 5, S 5, M 5, TIN 2, TIN 1, DDOE,
D 6, C 6, S 6, M 6, D 7, C 7, S 7, M 7, TIN 2, TIN 1,
BOU 0, BOU 1, BOU 2, BOU 3, BOU 4, BOU 5, BOU 6, BOU 7,
23D, 6F
74LS 374
DOUB 0, DOUB 1, DOUB 2, DOUB 3, DOUB 4, DOUB 5, DOUB 6, DOUB 7,
WDATA, DOE0
DOUB 8, DOUB 9, DOUB 10, DOUB 11, DOUB 12, DOUB 13, DOUB 14, DOUB 15,
BOU 0, BOU 1, BOU 2, BOU 3, BOU 4, BOU 5, BOU 6, BOU 7,
BOU 8, BOU 9, BOU 10, BOU 11, BOU 12, BOU 13, BOU 14, BOU 15,
LOCKED, LOCK0, DMAR0, DMAR1, TIN Ø0, RQDAP, TIN 1, TIN 2, TIN 0, LOCKED0, 74S260, RQEND, [111] Lα
WDATA0, ACL0, CLEAR0, 25F, 74LS 74, DMAR1, DMAR0, DOE, DOE0, DOOE,
DN 1, [111] Lα, SEA, DN 2, SEB, TIN 1, TIN 2, WDATA0, DRYR, WDATA,
ID. NO. 322622 CARD PRINT H C.G
CORR. ACCORD TO EQ2 100-119 02.10.80 AL
100-141 Rev. B, 100-151 Rev. B, 100-164 31/08/81 BW
160 30/11/81 BW
Corrected Date Sign.
N500 INTERFACE
BUS MULTIPLEXERS
Print no. 3022
Comp. TS
Page 2 of 6
NORSK DATA A.S
Oslo, Norway
5A71

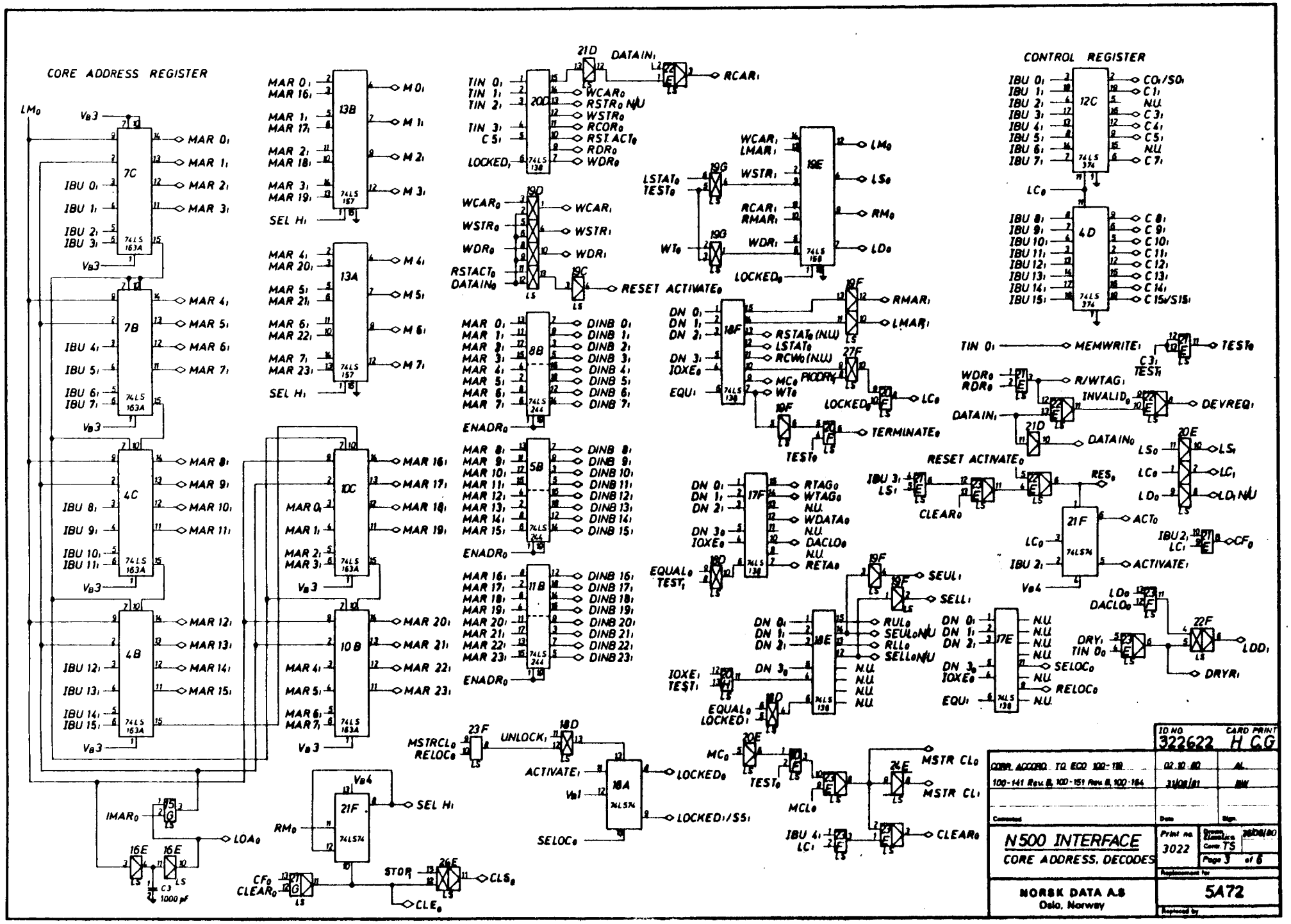
CORE ADDRESS REGISTER
CONTROL REGISTER
N500 INTERFACE
CORE ADDRESS, DECODES
NORSK DATA A.S
Oslo, Norway
5A72
322622
H.G.G
TS
Page 3 of 6
3022

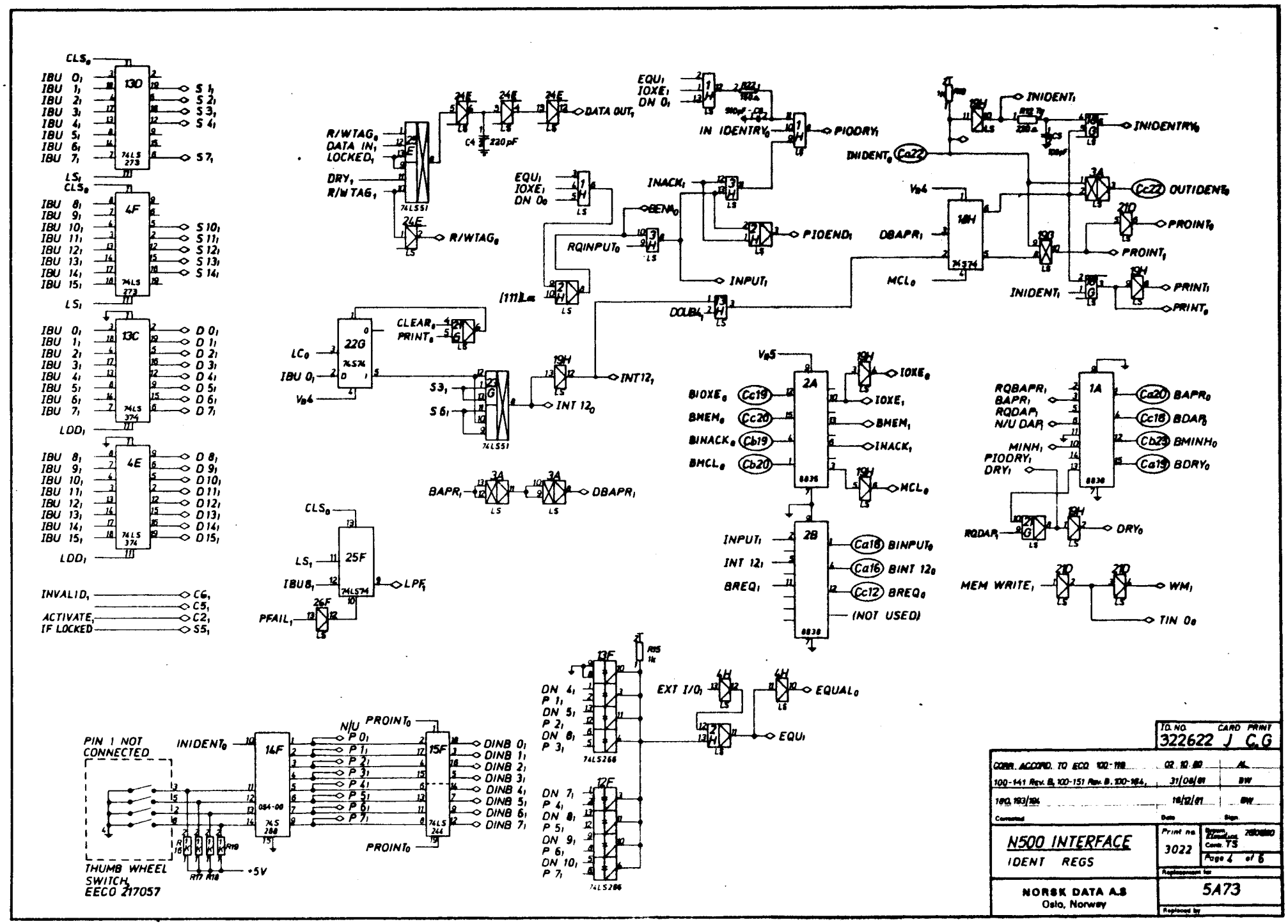
13D
74LS 273
4F
74LS 273
13C
74LS 374
4E
74LS 374
24E
74LS551
22G
74S74
74LS551
3A
19H
2A
8836
2B
8836
1A
8836
25F
74LS74
26F
14F
054-00
74S 288
15F
74LS 244
13F
74LS266
12F
74LS266
4H
2H
1H
3H
10H
18H
74S74
34
21D
CLS0
IBU 0i
IBU 1i
IBU 2i
IBU 3i
IBU 4i
IBU 5i
IBU 6i
IBU 7i
S 1i
S 2i
S 3i
S 4i
S 7i
LSi
IBU 8i
IBU 9i
IBU 10i
IBU 11i
IBU 12i
IBU 13i
IBU 14i
IBU 15i
S 10i
S 11i
S 12i
S 13i
S 14i
D 0i
D 1i
D 2i
D 3i
D 4i
D 5i
D 6i
D 7i
LDDi
D 8i
D 9i
D 10i
D 11i
D 12i
D 13i
D 14i
D 15i
INVALID1
ACTIVATE1
IF LOCKED
C6i
C5i
C2i
S5i
R/WTAG0
DATA IN1
LOCKED1
DRY1
R/WTAG1
DATA OUT1
C4 220pF
EQU1
IOXE1
DN 0i
IN IDENTRY0
PIODRY1
INACK1
BENA0
RQINPUT0
PIOEND1
INPUT1
(111)Lm
DOUB41
INIDENT1
INIDENTRY0
INIDENT0 (Ca22)
Vp4
DBAPR1
MCL0
(Cc22) OUTIDENT0
PROINT0
PROINT1
PRINT1
PRINT0
CLEAR0
PRINT0
LC0
IBU 0i
S3i
S6i
INT 12i
INT 12o
BAPRi
DBAPRi
Vp5
BIOXE0 (Cc19)
BMEM0 (Cc20)
BINACK0 (Cb19)
BMCL0 (Cb20)
IOXE0
IOXE1
BMEM1
INACK1
MCL0
INPUT1
INT 12i
BREQi
(Ca18) BINPUT0
(Ca16) BINT 120
(Cc12) BREQ0
(NOT USED)
RQBAPR1
BAPRi
RQDAPi
N/U DAPi
MINHi
PIODRY1
DRYi
(Ca20) BAPR0
(Cc18) BDAP0
(Cb23) BMINH0
(Ca19) BDRY0
RQDAPi
DRY0
MEM WRITE1
WM1
TIN 0o
CLS0
LSi
IBU8i
LPFi
PFAIL1
INVALID1
ACTIVATE1
IF LOCKED
C6i
C5i
C2i
S5i
PIN 1 NOT CONNECTED
INIDENT0
N/U
PROINT0
P 0i
P 1i
P 2i
P 3i
P 4i
P 5i
P 6i
P 7i
DINB 0i
DINB 1i
DINB 2i
DINB 3i
DINB 4i
DINB 5i
DINB 6i
DINB 7i
THUMB WHEEL SWITCH, EECO 217057
+5V
DN 4i
P 1i
DN 5i
P 2i
DN 6i
P 3i
DN 7i
P 4i
DN 8i
P 5i
DN 9i
P 6i
DN 10i
P 7i
EXT I/Oi
EQUAL0
EQUi
TO NO. 322622
CARD PRINT J C.G
CORR. ACCORD. TO ECO 100-118 02.10.80 AL
100-141 Rev. B, 100-151 Rev. B, 100-164, 31/08/81 BW
180, 193/194 18/12/81 BW
Corrected Date Sign.
N500 INTERFACE
IDENT REGS
Print no. 3022
Page 4 of 6
NORSK DATA A.S
Oslo, Norway
5A73
Replaced by

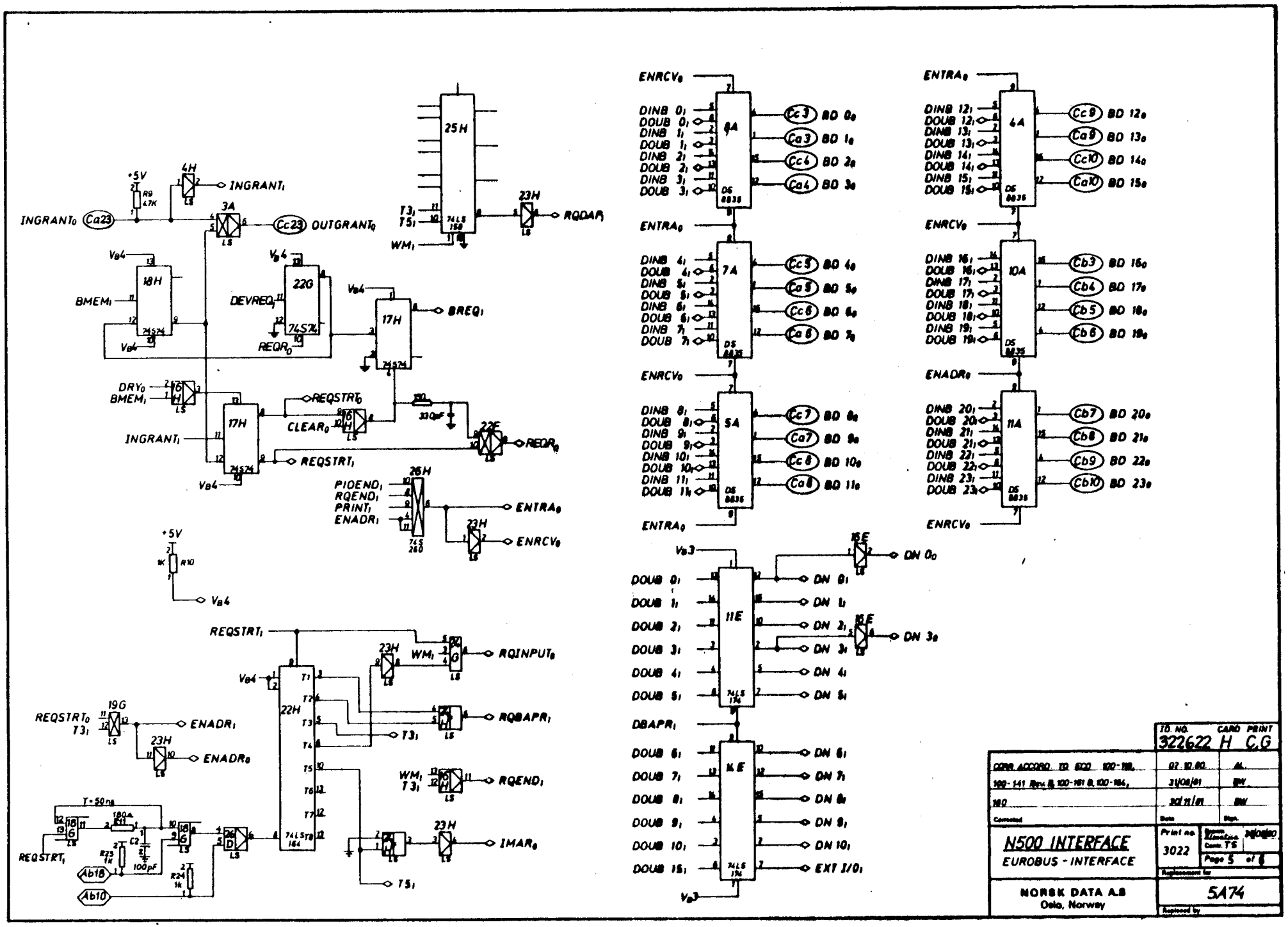
INGRANT0
INGRANT1
OUTGRANT0
BMEM1
DEVREQ1
REQR0
BREQ1
DRY0
CLEAR0
REQSTRT0
REQSTRT1
REQR1
PIOEND1
RQEND1
PRINT1
ENADR1
ENTRA0
ENRCV0
RQDAR1
WM1
T3
T5
RQINPUT0
RQBAPR1
IMAR0
DBAPR1
DN 0
DN 3
EXT I/O1
TD. NO. 322622
CARD PRINT H C.G
N500 INTERFACE
EUROBUS - INTERFACE
NORSK DATA A.S
Oslo, Norway
Print no. 3022
Page 5 of 6
5A74

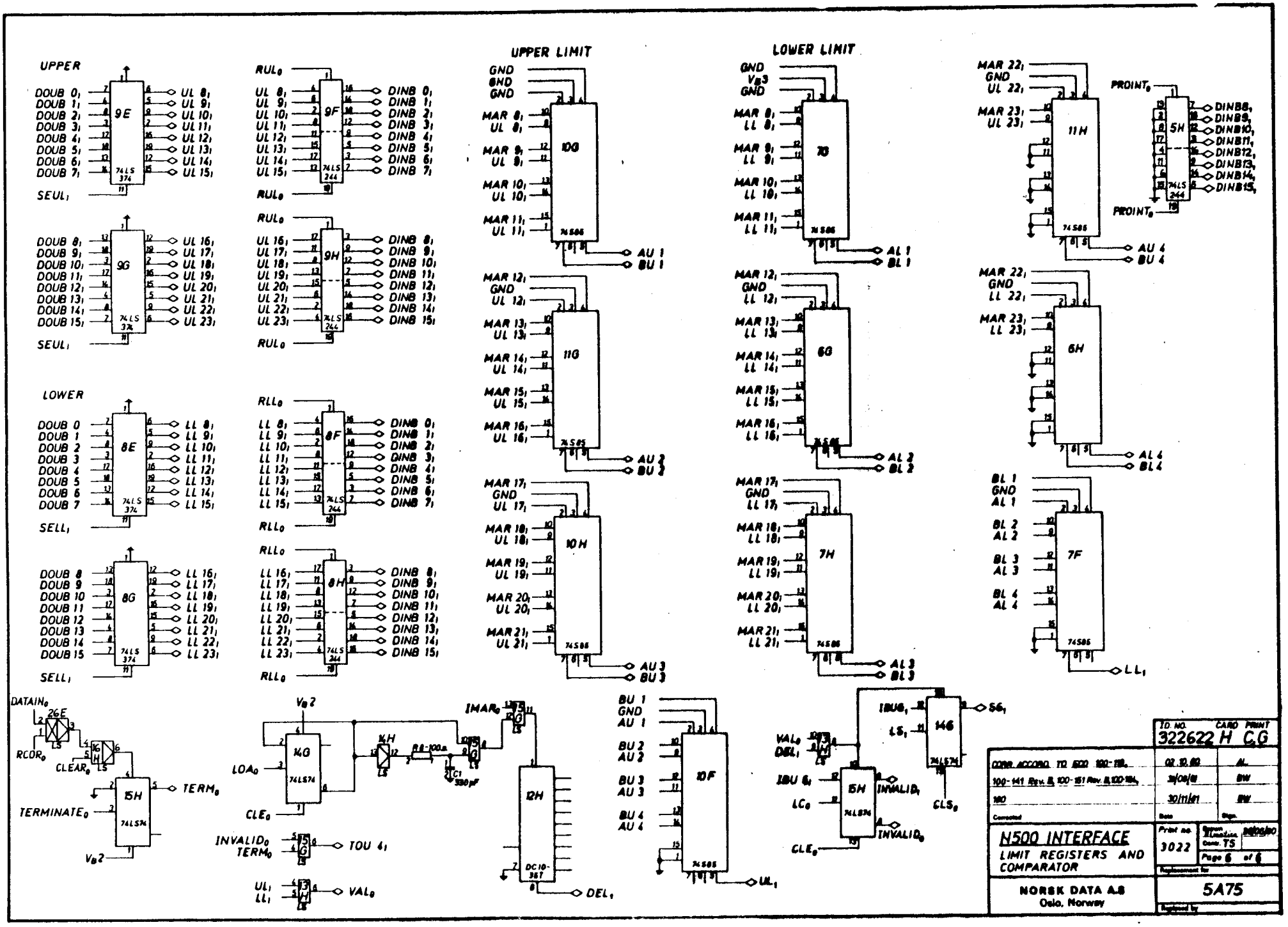

ID NO.	CARD PRINT
322622	H C.G

CORR. ACCORD. TO ECO 100-118	02.10.80	AL
100-141 Rev. B, 100-151 Rev. B, 100-184	31/08/81	BW
160	30/11/81	BW
Corrected	Date	Sign.

N500 INTERFACE

LIMIT REGISTERS AND COMPARATOR

Print no. 3022

Drawn Magnus Ostbø 26/06/80

Cont. TS

Page 6 of 6

Replacement for

NORSK DATA A.S
Oslo, Norway

5A75

Replaced by

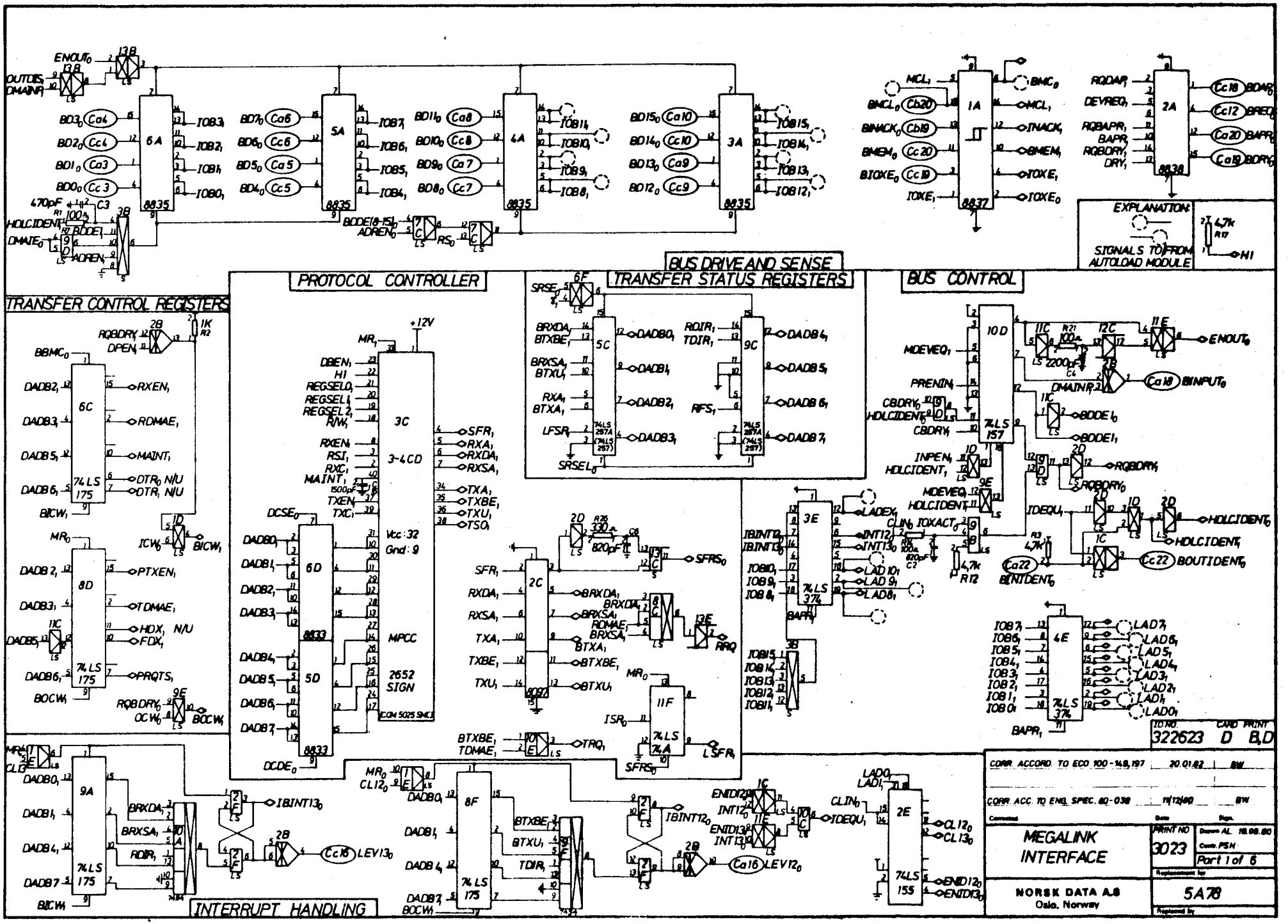
TRANSFER CONTROL REGISTERS
PROTOCOL CONTROLLER
BUS DRIVE AND SENSE
TRANSFER STATUS REGISTERS
BUS CONTROL
INTERRUPT HANDLING
EXPLANATION:
SIGNALS TO/FROM AUTOLOAD MODULE
MEGALINK INTERFACE
NORSK DATA A.S
Oslo, Norway
322623 D B,D
3023
5A78
Part 1 of 6

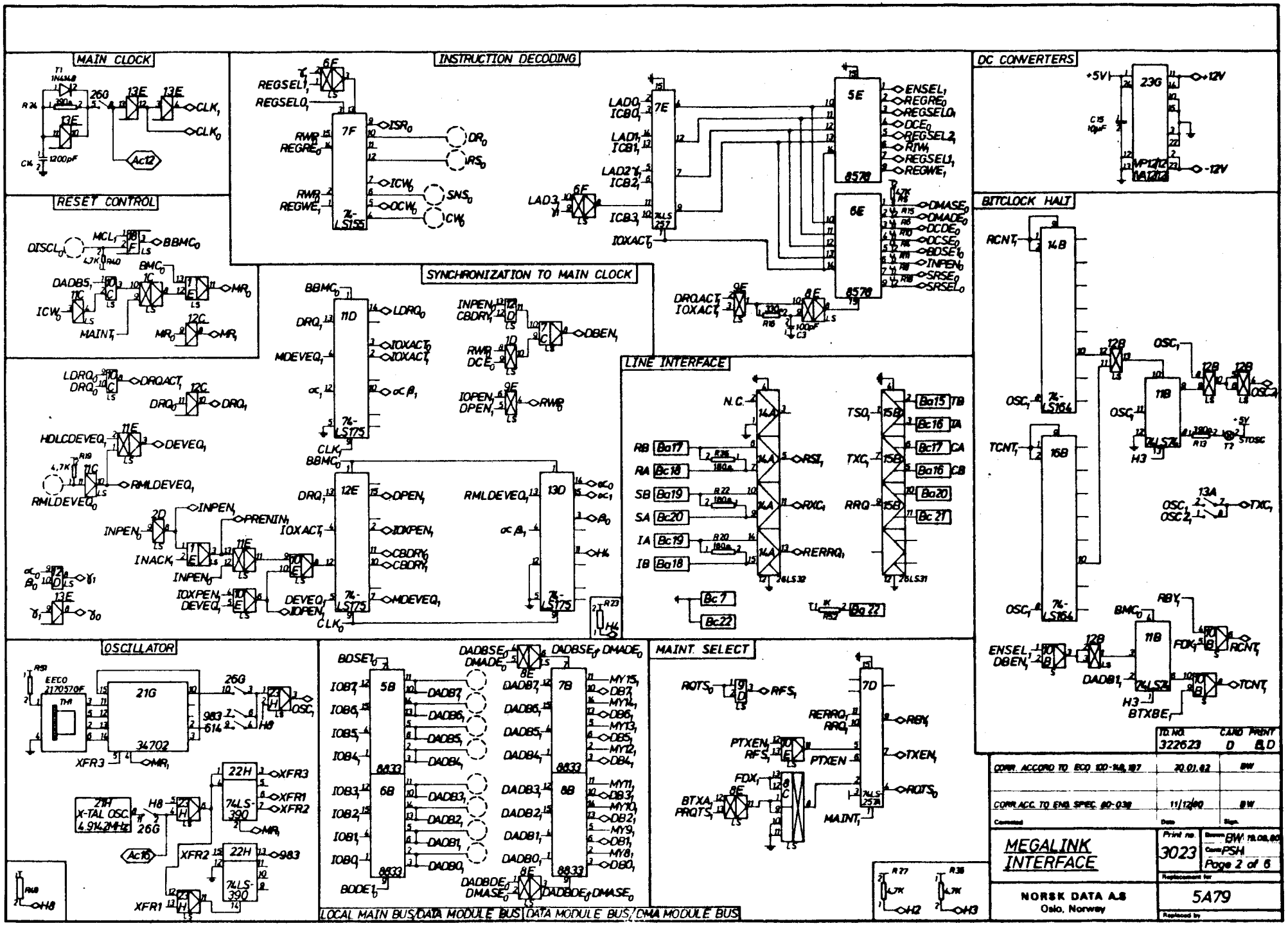
MAIN CLOCK
INSTRUCTION DECODING
DC CONVERTERS
RESET CONTROL
SYNCHRONIZATION TO MAIN CLOCK
BITCLOCK HALT
LINE INTERFACE
OSCILLATOR
MAINT. SELECT
LOCAL MAIN BUS/DATA MODULE BUS/DATA MODULE BUS/DMA MODULE BUS
MEGALINK INTERFACE
NORSK DATA A.S
Oslo, Norway
3023
Page 2 of 6
5A79
322623
CORR. ACCORD TO ECO 100-148,187
20.01.82
CORR.ACC. TO ENG. SPEC. 80-038
11/12/80

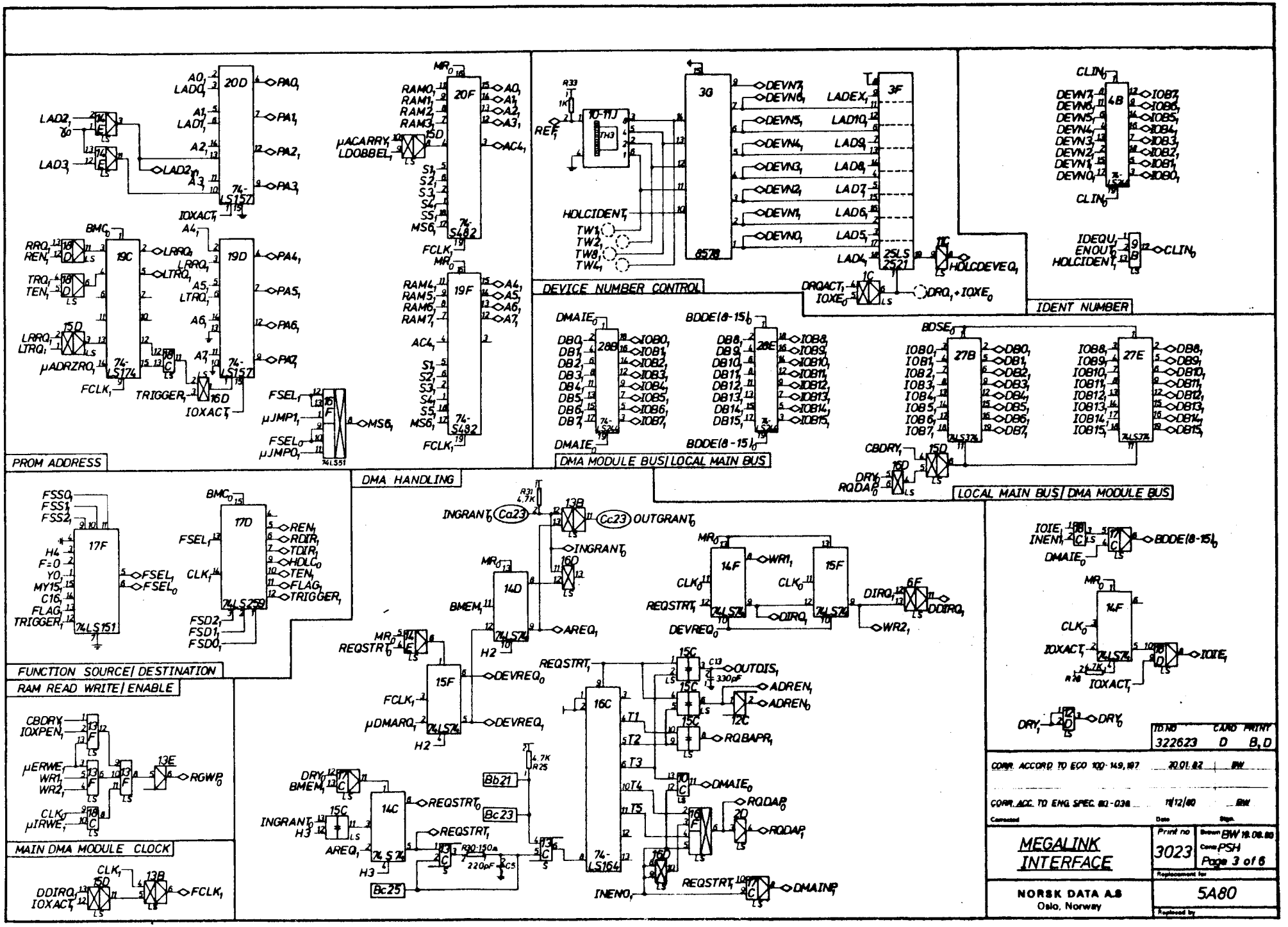
PROM ADDRESS
DEVICE NUMBER CONTROL
IDENT NUMBER
DMA MODULE BUS/LOCAL MAIN BUS
LOCAL MAIN BUS/DMA MODULE BUS
DMA HANDLING
FUNCTION SOURCE/DESTINATION
RAM READ WRITE/ENABLE
MAIN DMA MODULE CLOCK
MEGALINK INTERFACE
NORSK DATA A.S
Oslo, Norway
322623
3023
5A80
Page 3 of 6

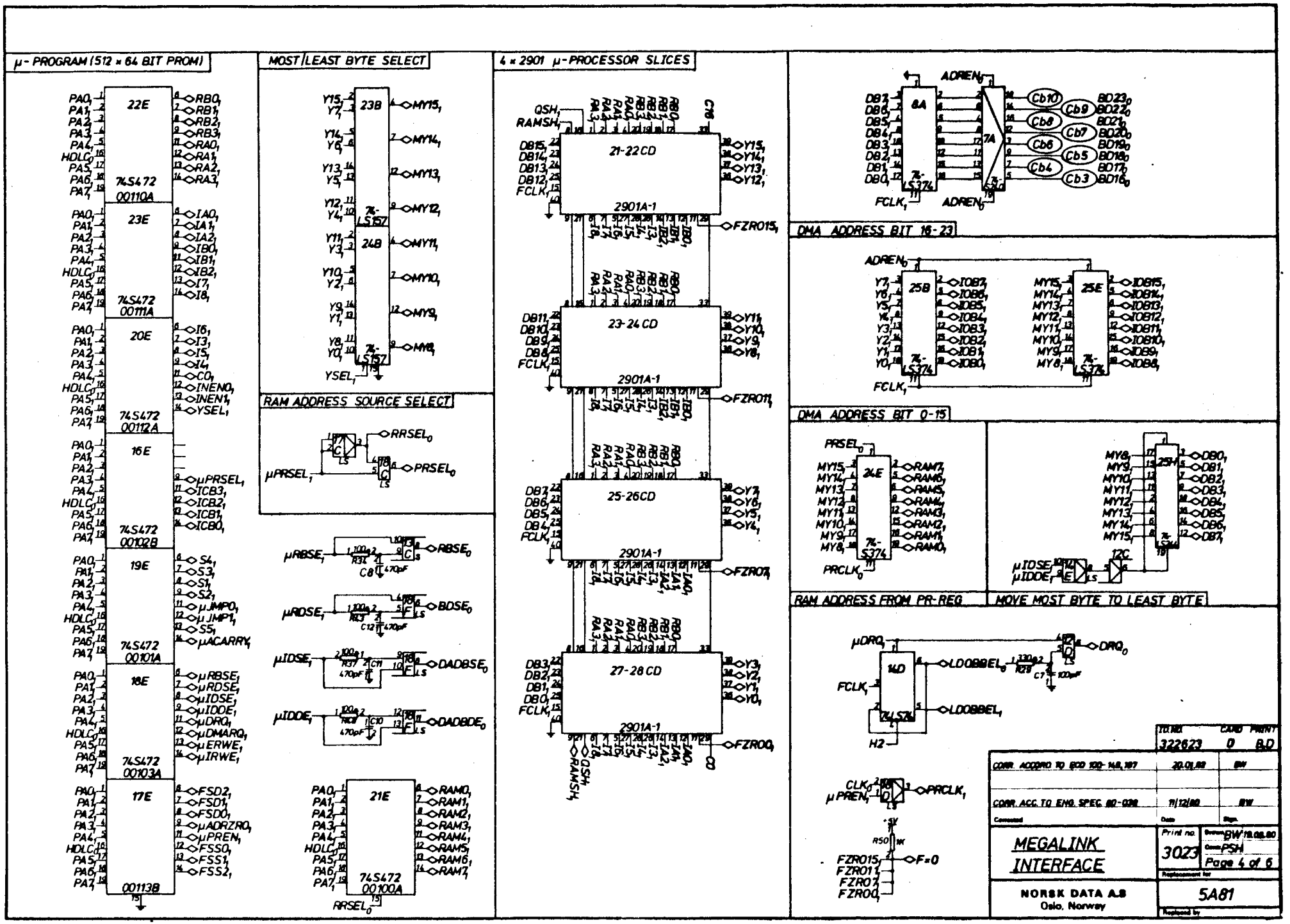
μ-PROGRAM (512 x 64 BIT PROM)
MOST/LEAST BYTE SELECT
4 x 2901 μ-PROCESSOR SLICES
DMA ADDRESS BIT 16-23
RAM ADDRESS SOURCE SELECT
DMA ADDRESS BIT 0-15
RAM ADDRESS FROM PR-REG
MOVE MOST BYTE TO LEAST BYTE
22E
74S472
00110A
23E
74S472
00111A
20E
74S472
00112A
16E
74S472
00102B
19E
74S472
00101A
18E
74S472
00103A
17E
00113B
23B
24B
74-LS157
21E
74S472
00100A
21-22CD
23-24CD
25-26CD
27-28CD
2901A-1
8A
7A
25B
25E
24E
25H
14D
12C
74-LS374
MEGALINK
INTERFACE
NORSK DATA A.S
Oslo, Norway
3023
Page 4 of 6
5A81
322623
D
B.D
CORR. ACCORD TO ECO 100-148,187
20.01.82
BW
CORR. ACC. TO ENG. SPEC. 80-038
11/12/80
BW
Print no.
Drawn BW 18.06.80
Code PSH
Replacement for
Replaced by

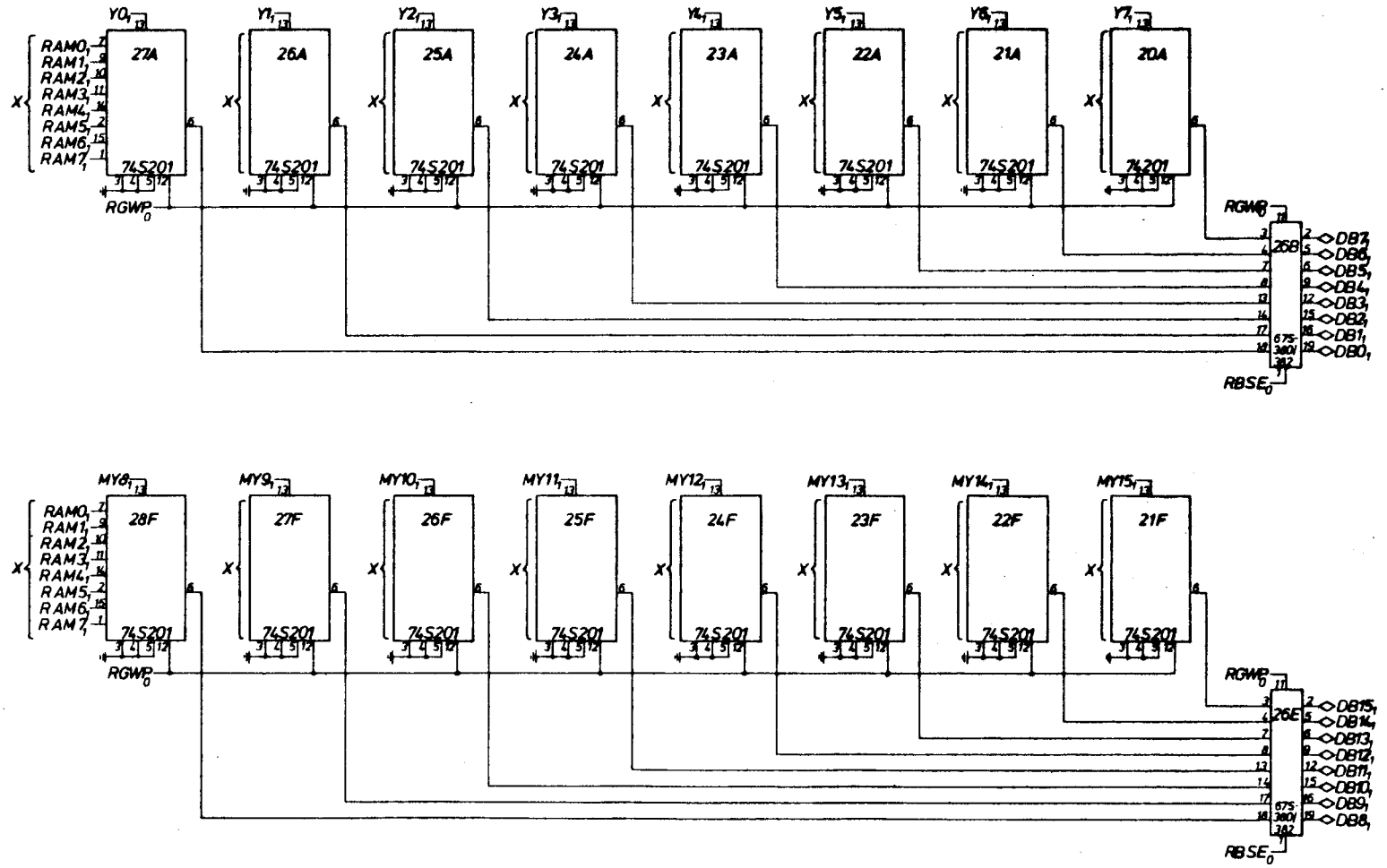

256 x 16 BIT RAM

TD NO.	CARD	PRINT
322623	D	B,D

Corrected	Date	Sign
CORR ACCORD TO ECO 100-148,197	20.01.82	BW
CORR. ACC. TO ENG. SPEC 80-038	11/12/80	BW

MEGALINK INTERFACE

Print no 3023

Drawn BW 19.08.80

Comp PSH

Page 5 of 6

Replacement for

NORSK DATA A.S
Oslo, Norway

5A82

Replaced by

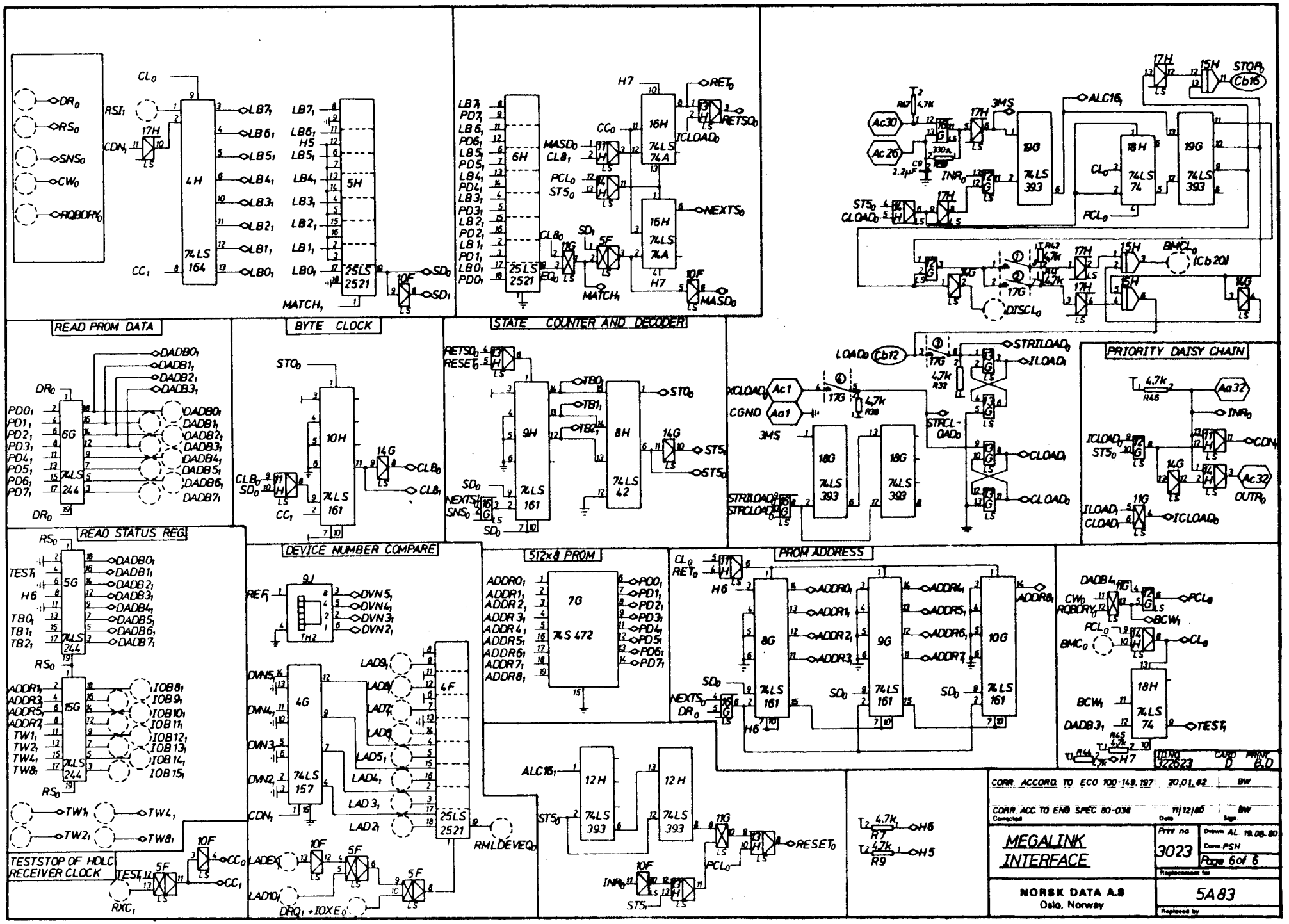
READ PROM DATA
BYTE CLOCK
STATE COUNTER AND DECODER
PRIORITY DAISY CHAIN
READ STATUS REG
DEVICE NUMBER COMPARE
512x8 PROM
PROM ADDRESS
TESTSTOP OF HDLC RECEIVER CLOCK
MEGALINK INTERFACE
NORSK DATA A.S
Oslo, Norway
3023
Page 6 of 6
5A83
CORR. ACCORD. TO ECO 100-149, 197
20.01.82
CORR. ACC. TO ENG. SPEC 80-038
11/12/80
Drawn AL 19.08.80
Drawn PSH

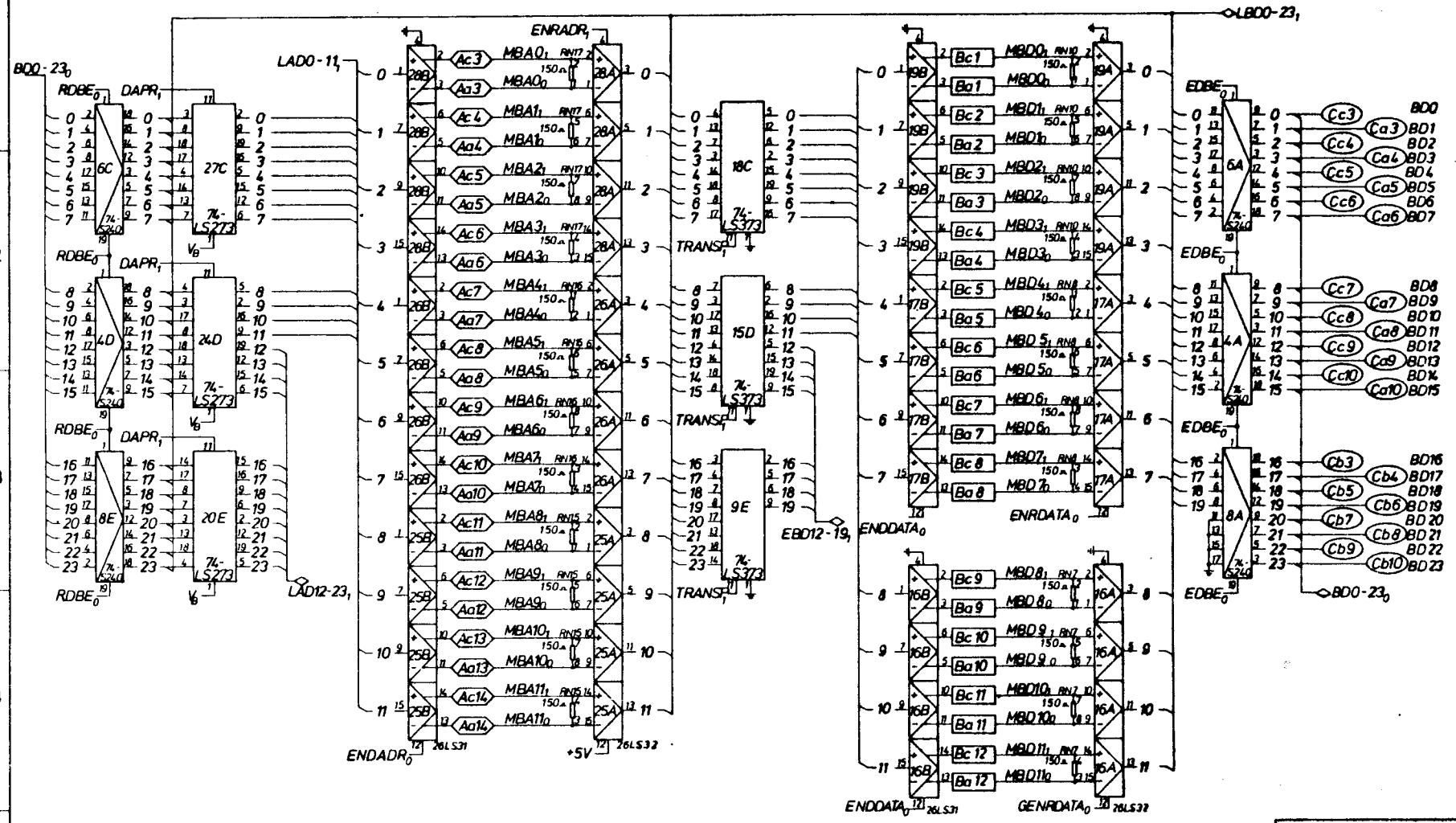

ID NO.	CARD	PRINT
322624	C	B

CORR. ACCORD TO ECO 100-127	01/12/80	AL
Corrected	Date	Sign.

N-10 BUS ADAPTER

Print no./Scale: 3024

Drawn: BW 08/10/80

Contr: HS

Page 1 of 3

Replacement for: 5A84

Replaced by:

NORSK DATA A.S
Oslo, Norway

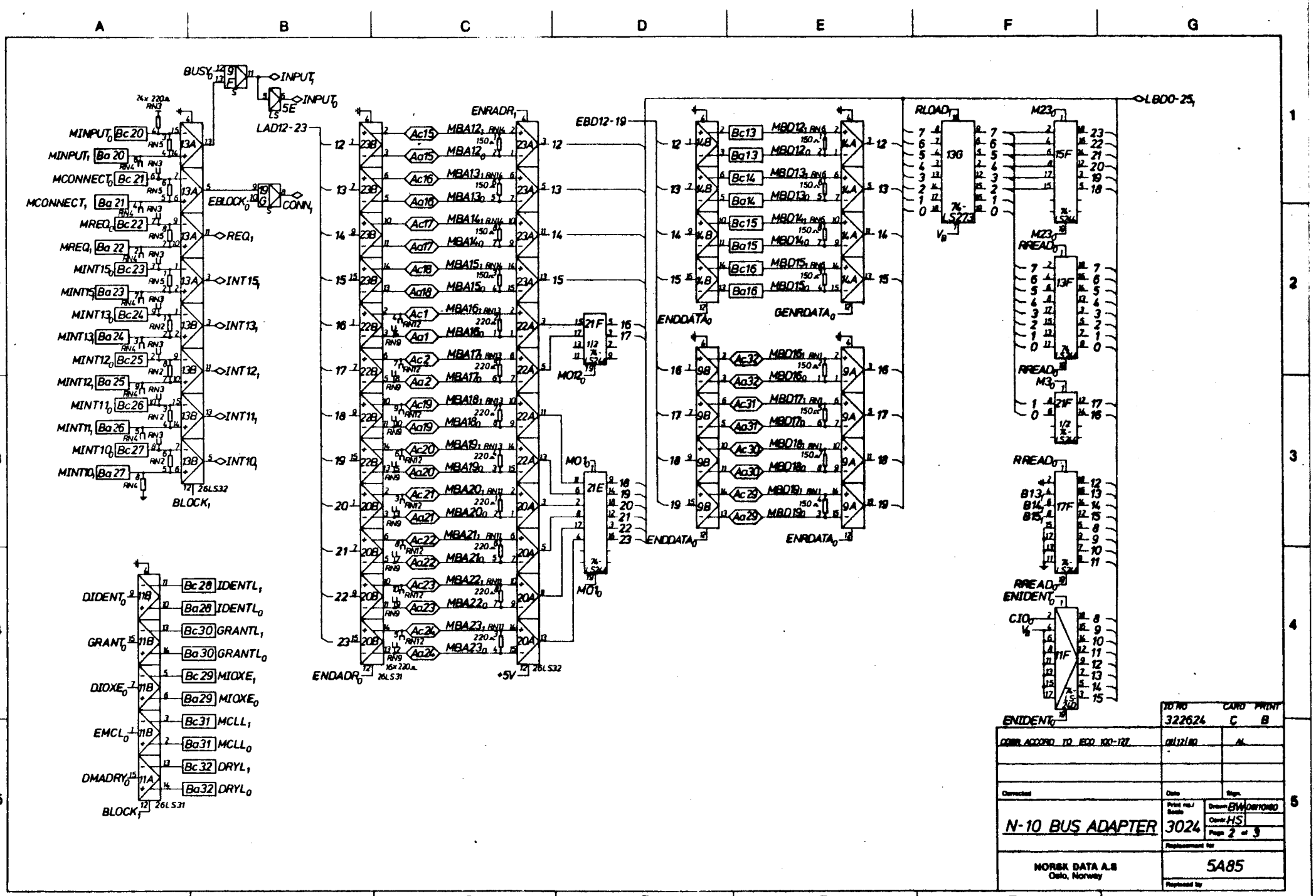
A B C D E F G
BUSY0
INPUT1
INPUT0
5E
LS
LAD12-23
ENRADR1
EBD12-19
LBD0-25
MINPUT0 Bc20
MINPUT1 Ba20
MCONNECT0 Bc21
MCONNECT1 Ba21
MREQ0 Bc22
MREQ1 Ba22
MINT15 Bc23
MINT15 Ba23
MINT13 Bc24
MINT13 Ba24
MINT12 Bc25
MINT12 Ba25
MINT11 Bc26
MINT11 Ba26
MINT10 Bc27
MINT10 Ba27
EBLOCK0
CONN1
REQ1
INT15
INT13
INT12
INT11
INT10
BLOCK1
26LS32
DIDENT0
GRANT0
DIOXE0
EMCL0
DMADRY0
BLOCK1
26LS31
Bc28 IDENTL1
Ba28 IDENTL0
Bc30 GRANTL1
Ba30 GRANTL0
Bc29 MIOXE1
Ba29 MIOXE0
Bc31 MCLL1
Ba31 MCLL0
Bc32 DRYL1
Ba32 DRYL0
ENDADR0
26LS31
+5V
26LS32
MO12
MO1
ENDODATA0
ENDODATA0
GENRDATA0
ENRDATA0
RLOAD1
V8
74-LS273
M23
RREAD0
M3
RREAD0
ENIDENT0
CIO
ENIDENT0
10 NO 322624
CARD C
PRINT B
CORR. ACCORD TO ECO 100-127
N-10 BUS ADAPTER
3024
Page 2 of 3
NORSK DATA A.S
Oslo, Norway
5A85

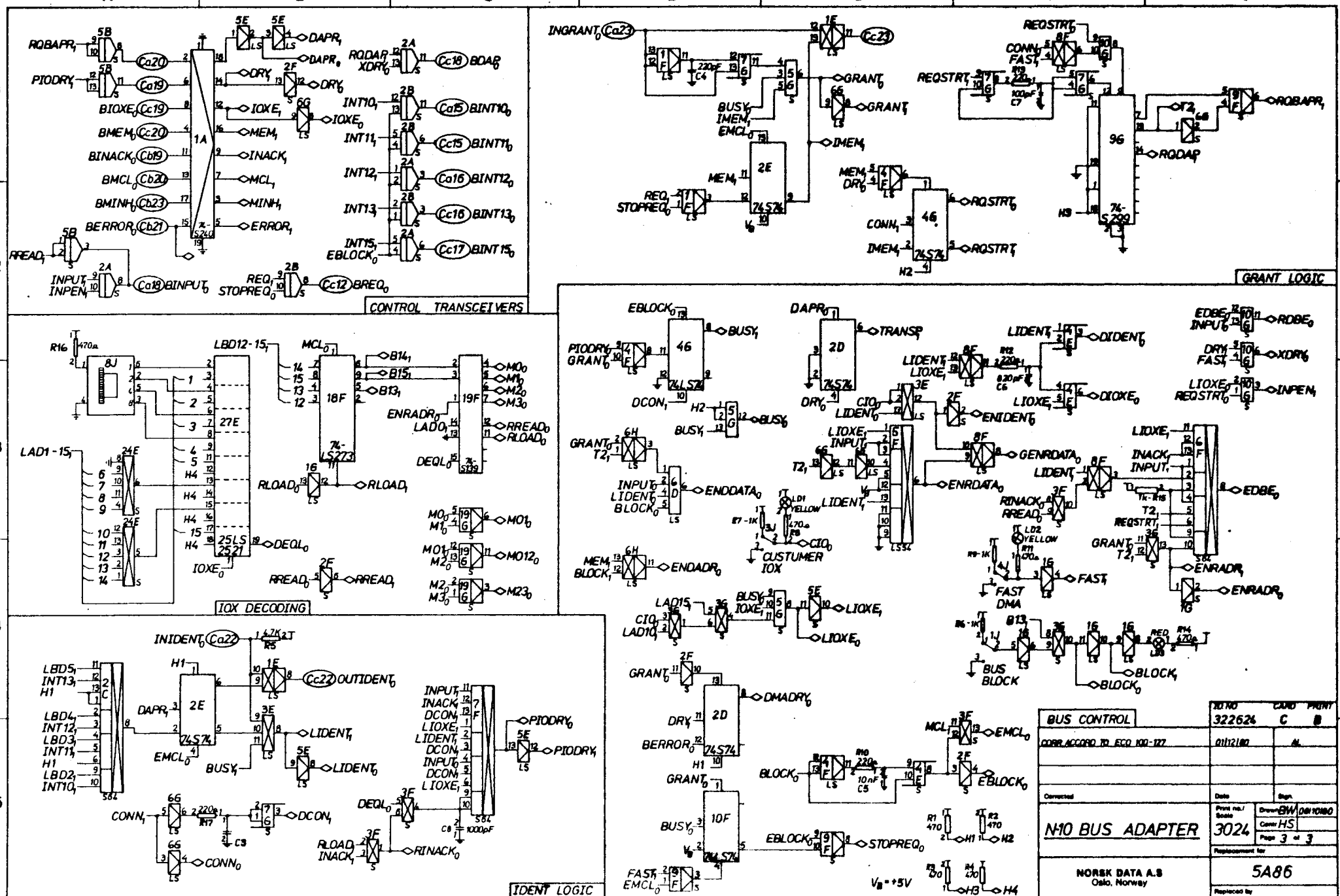
CONTROL TRANSCEIVERS
GRANT LOGIC
IOX DECODING
IDENT LOGIC
BUS CONTROL
CORR.ACCORD TO ECO 100-127
N-10 BUS ADAPTER
NORSK DATA A.S
Oslo, Norway
322624
C
B
3024
5A86
Page 3 of 3

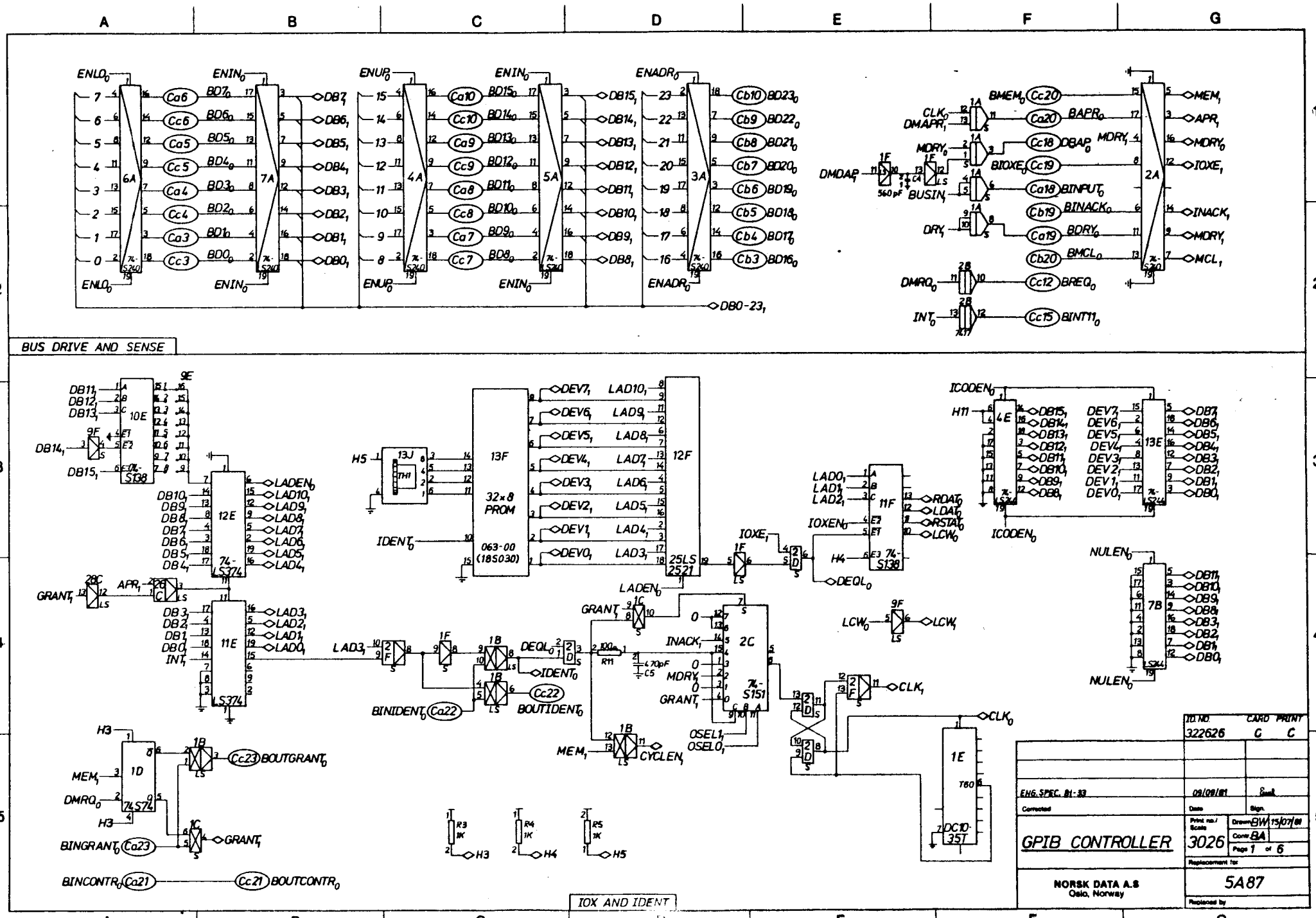
BUS DRIVE AND SENSE
IOX AND IDENT
GPIB CONTROLLER
NORSK DATA A.S
Oslo, Norway
322626
C C
ENG.SPEC. B1-33
09/08/81
3026
5A87
Page 1 of 6

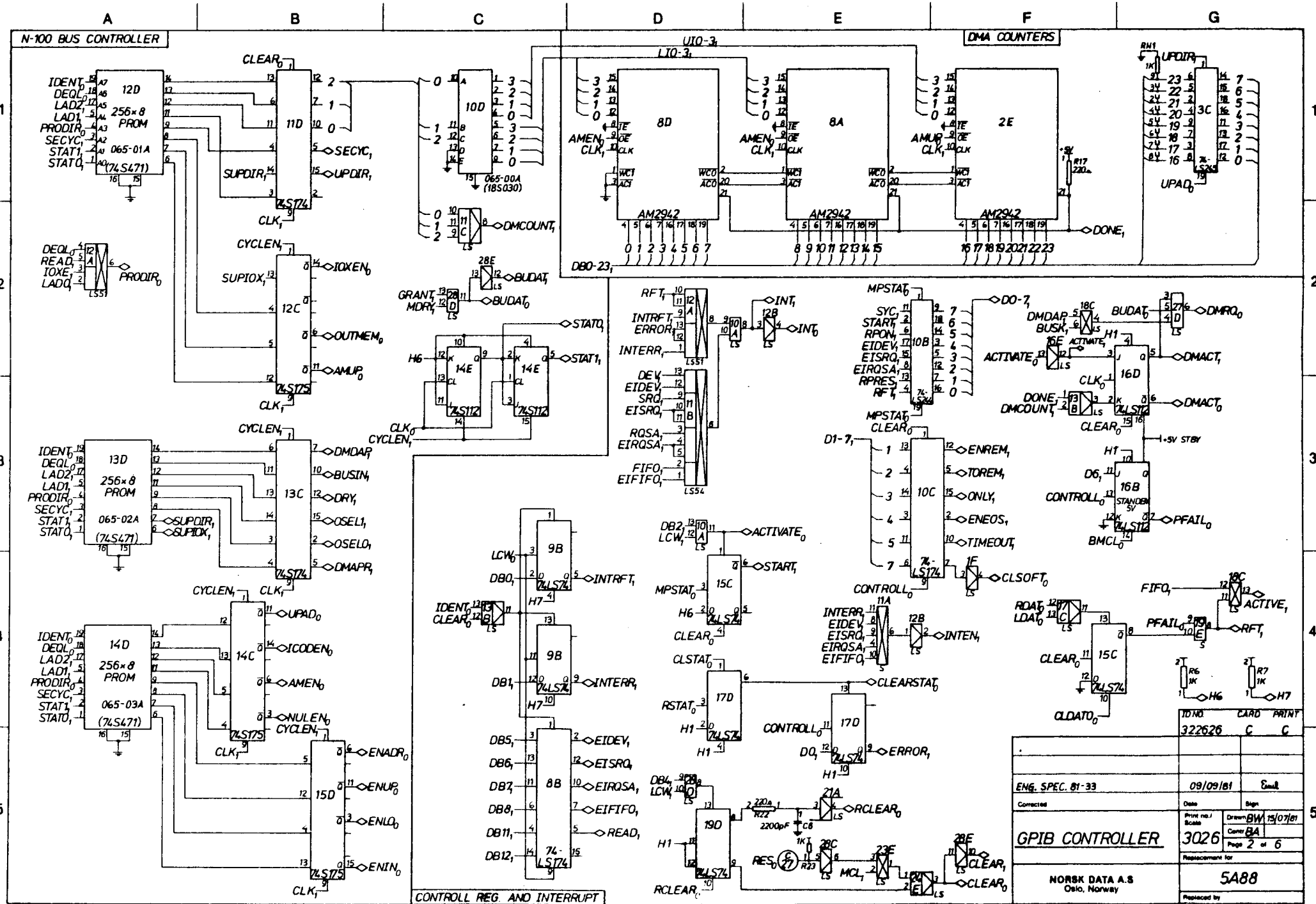
N-100 BUS CONTROLLER
DMA COUNTERS
CONTROLL REG. AND INTERRUPT
12D 256x8 PROM 065-01A (74S471)
11D
10D
065-00A (18S030)
8D
8A
2E
AM2942
3C
13D 256x8 PROM 065-02A (74S471)
13C
12C
14E
14D 256x8 PROM 065-03A (74S471)
14C
15D
9B
8B
74-LS174
10B
10C
16D
16B
15C
17D
19D
21A
GPIB CONTROLLER
ENG. SPEC. 81-33
09/09/81
3026
5A88
NORSK DATA A.S
Oslo, Norway

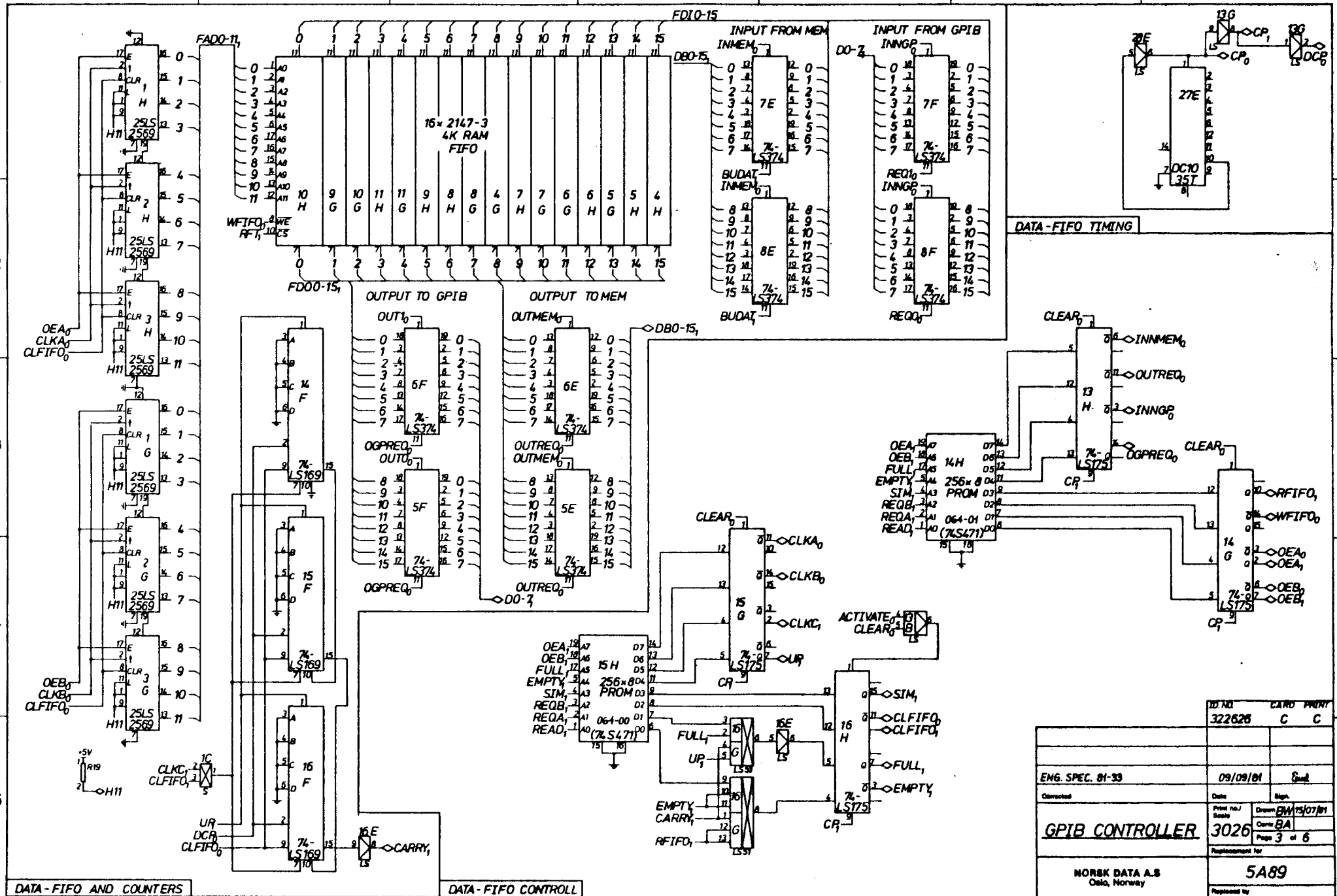
FDIO-15
FADO-11
16 x 2147-3
4K RAM
FIFO
WFIFO
RFT
FDOO-15
DBO-15
INPUT FROM MEM
INPUT FROM GPIB
INMEM
INNGP
DO-7
BUDAT
REQ
OUTPUT TO GPIB
OUTPUT TO MEM
OUT
OUTMEM
OGPREQ
OUTREQ
OUTMEM
DO-7
OEA
CLKA
CLFIFO
OEB
CLKB
CLFIFO
CLKC
CLFIFO
UR
DCP
CLFIFO
CARRY
CLEAR
INNMEM
OUTREQ
INNGP
OGPREQ
CP
256 x 8
PROM
064-00
(74LS471)
ACTIVATE
CLEAR
SIM
CLFIFO
FULL
EMPTY
RFIFO
DATA-FIFO TIMING
DATA-FIFO AND COUNTERS
DATA-FIFO CONTROLL
ENG. SPEC. 81-33
09/09/81
GPIB CONTROLLER
3026
NORSK DATA A.S
Oslo, Norway
5A89
322626
C
C
BM 15/07/81
BA
3 of 6

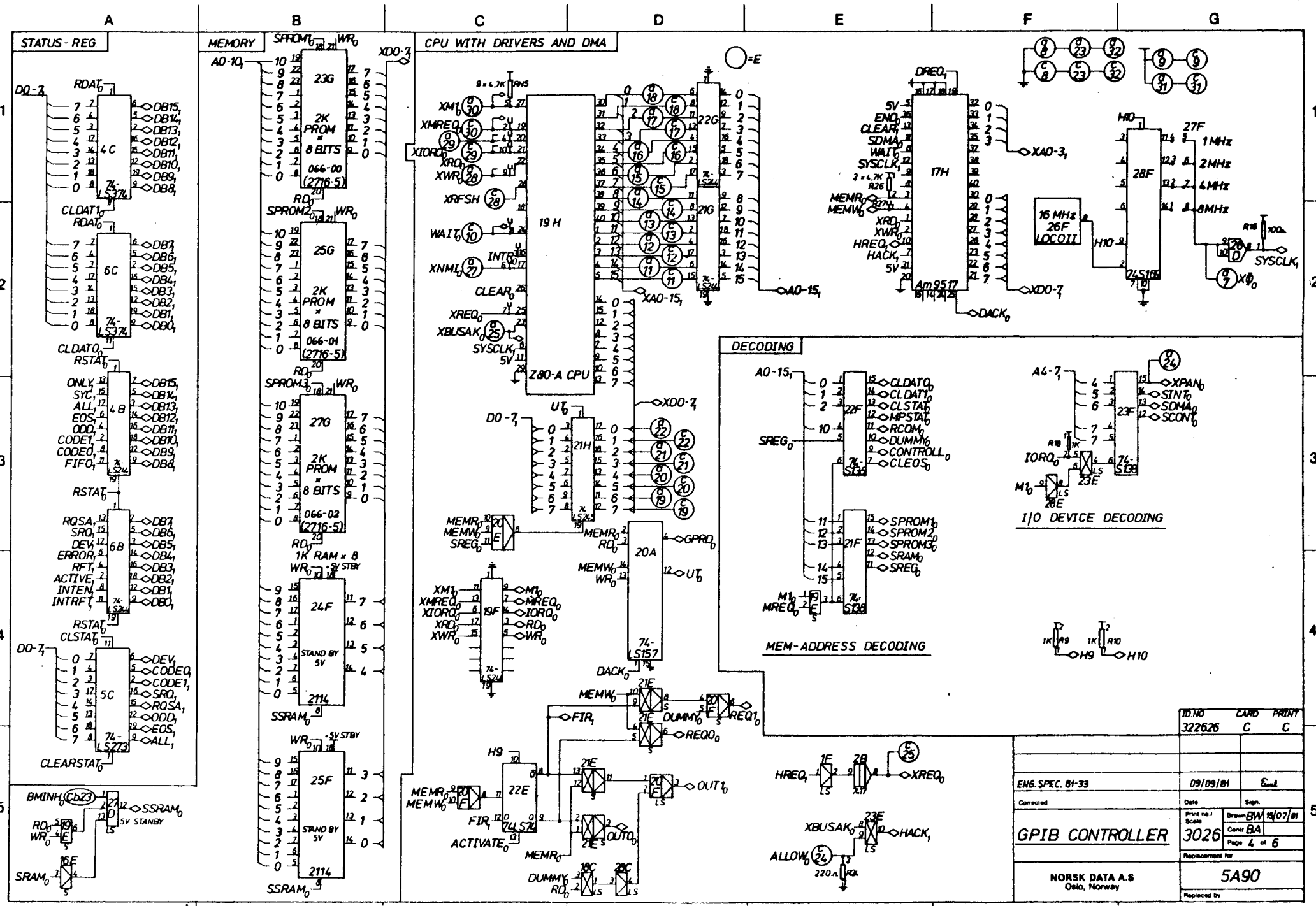
STATUS - REG.
MEMORY
CPU WITH DRIVERS AND DMA
DECODING
Z80-A CPU
2K PROM × 8 BITS
1K RAM × 8
STAND BY 5V
I/O DEVICE DECODING
MEM-ADDRESS DECODING
16 MHz 26F LOCOII
1 MHz
2 MHz
4 MHz
8 MHz
ENG.SPEC. 81-33
09/09/81
GPIB CONTROLLER
3026
NORSK DATA A.S
Oslo, Norway
5A90

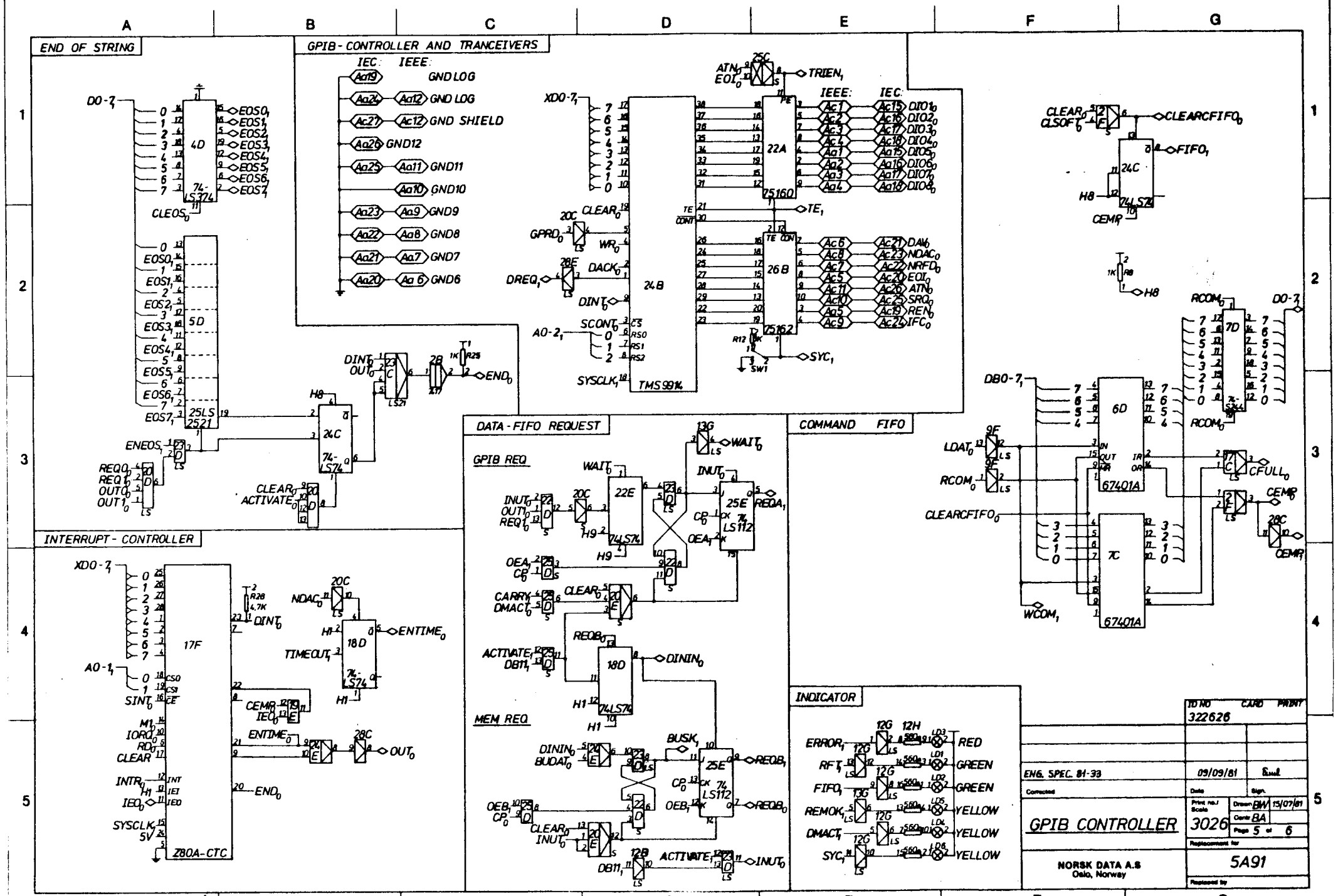
END OF STRING
GPIB-CONTROLLER AND TRANCEIVERS
INTERRUPT-CONTROLLER
DATA-FIFO REQUEST
COMMAND FIFO
INDICATOR
IEC: IEEE:
GND LOG
GND SHIELD
GND12
GND11
GND10
GND9
GND8
GND7
GND6
TMS9914
75160
75162
74LS374
25LS 2521
74LS74
74LS112
74LS74
67401A
Z80A-CTC
17F
18D
22E
25E
RED
GREEN
YELLOW
NORSK DATA A.S
Oslo, Norway
GPIB CONTROLLER
3026
5A91
322626
09/09/81
15/07/81
Page 5 of 6

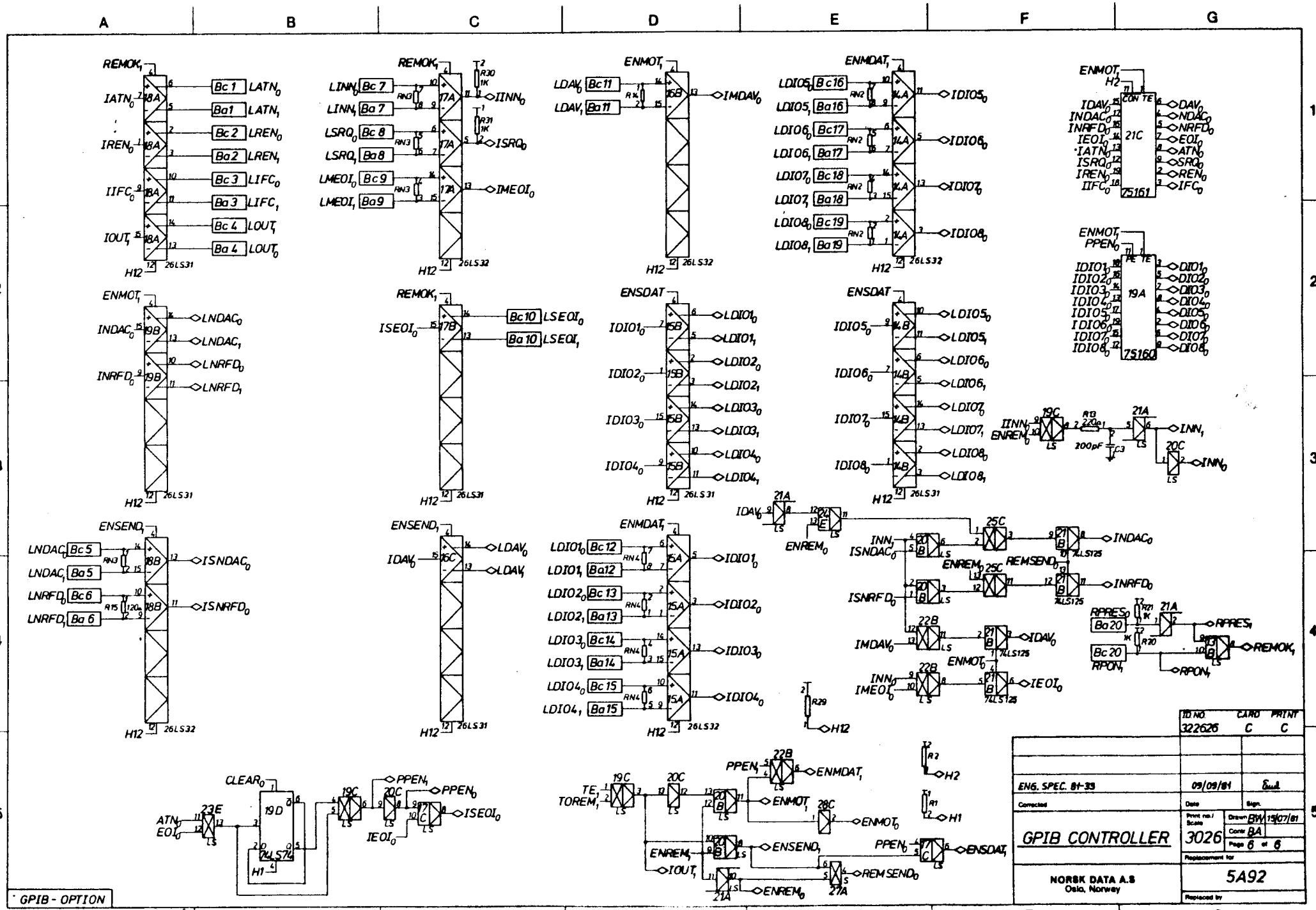
GPIB - OPTION
GPIB CONTROLLER
NORSK DATA A.S
Oslo, Norway
ENG. SPEC. 81-33
09/09/81
3026
Page 6 of 6
5A92
322626
C
C
26LS31
26LS32
75161
75160
7LS125
7LS74

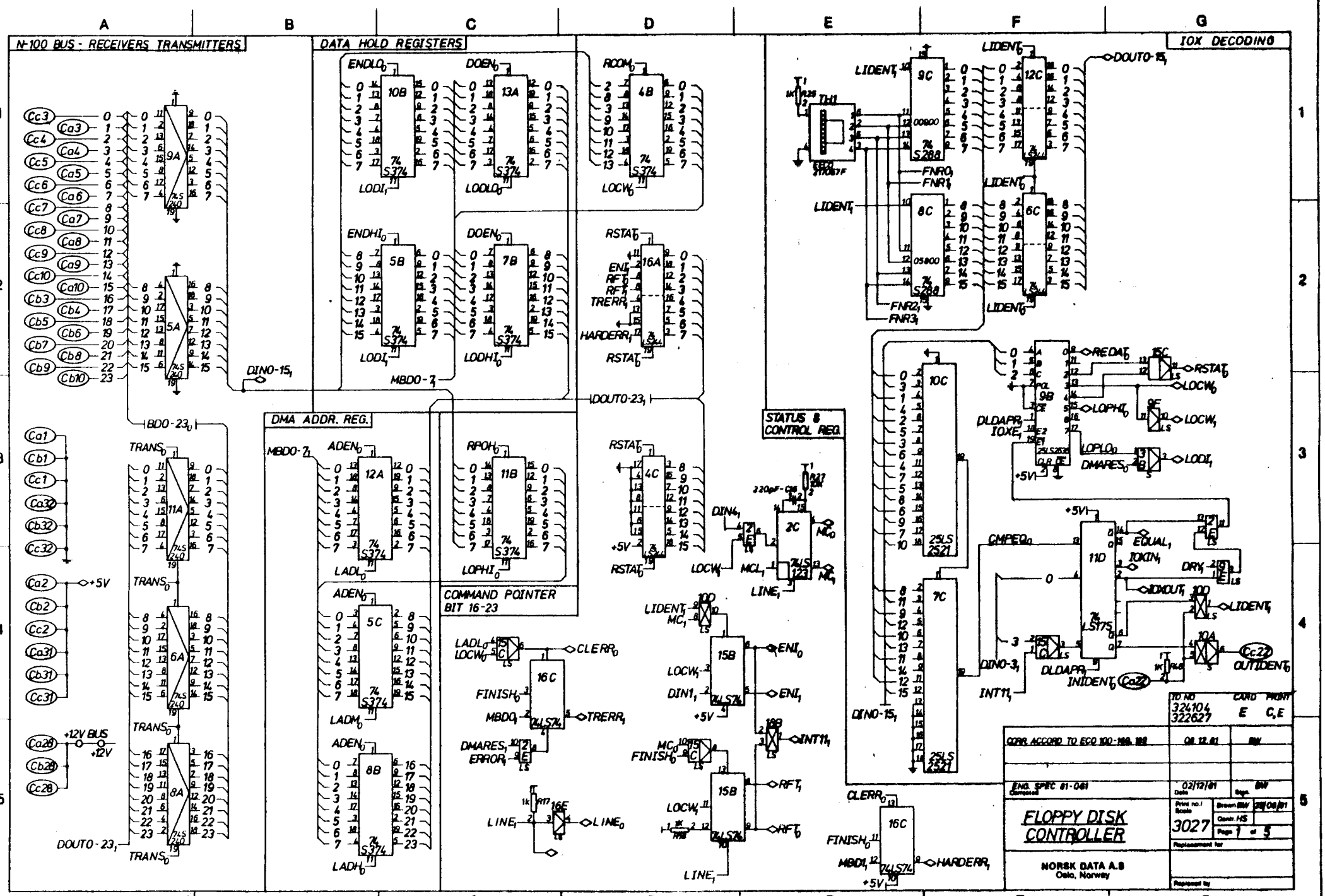
N-100 BUS - RECEIVERS TRANSMITTERS
DATA HOLD REGISTERS
IOX DECODING
DMA ADDR. REG.
STATUS & CONTROL REG.
COMMAND POINTER BIT 16-23
FLOPPY DISK CONTROLLER
NORSK DATA A.S
Oslo, Norway
3027
324104
322627
CARD PRINT
E C,E
CORR. ACCORD TO ECO 100-169, 189
08.12.81
ENG. SPEC 81-061
02/12/81
Page 1 of 5

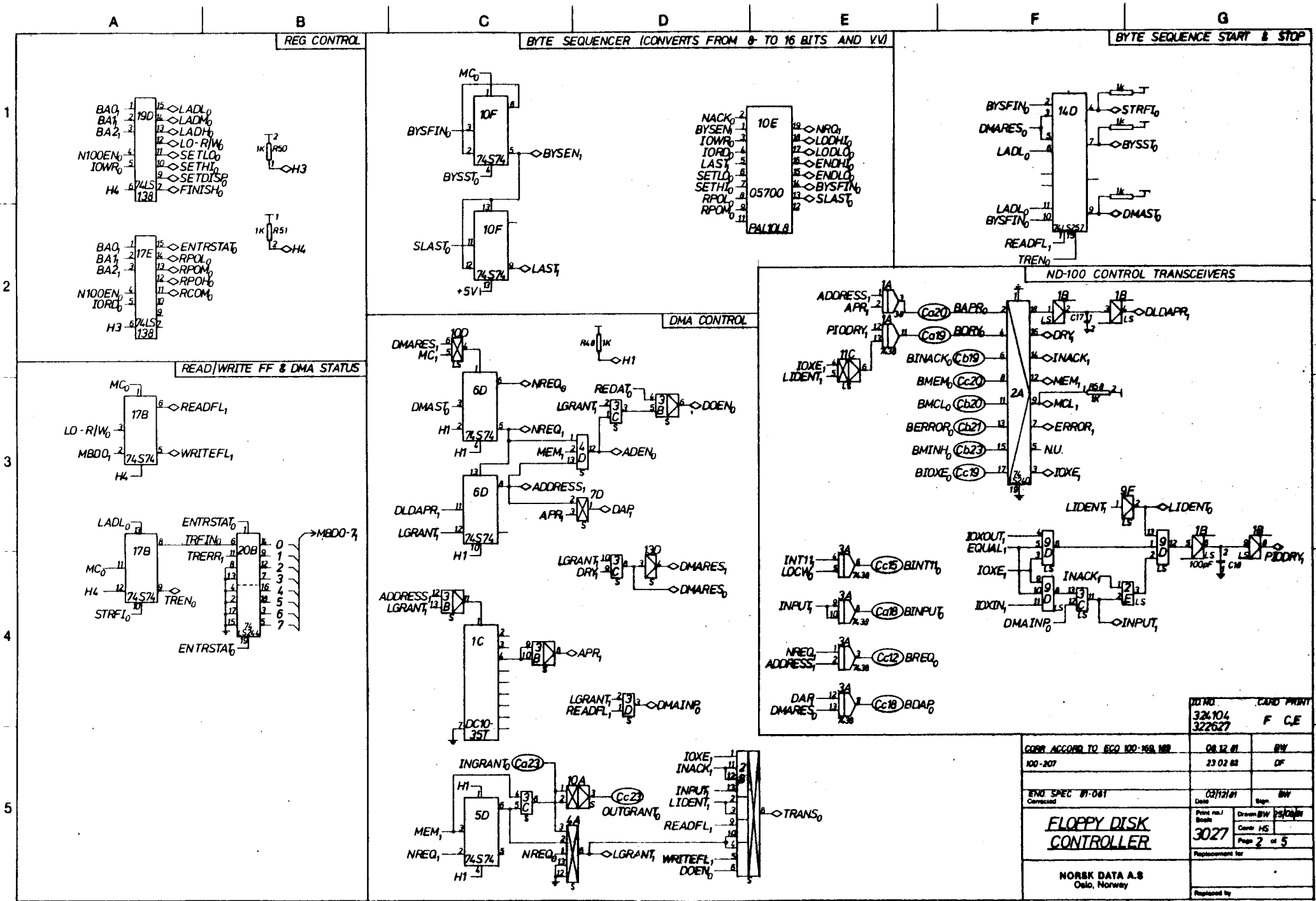
REG CONTROL
BYTE SEQUENCER (CONVERTS FROM 8 TO 16 BITS AND V.V.)
BYTE SEQUENCE START & STOP
ND-100 CONTROL TRANSCEIVERS
DMA CONTROL
READ/WRITE FF & DMA STATUS
19D
74LS 138
17E
10F
74S74
10E
05700
PAL10L8
14D
74LS257
2A
74LS240
6D
5D
1C
DC10-357
20B
74S244
17B
FLOPPY DISK CONTROLLER
3027
NORSK DATA A.S
Oslo, Norway
324104
322627
F C,E
CORR ACCORD TO ECO 100-169 100-207
08.12.81
23.02.82
END SPEC 81-061
03/12/81
Page 2 of 5

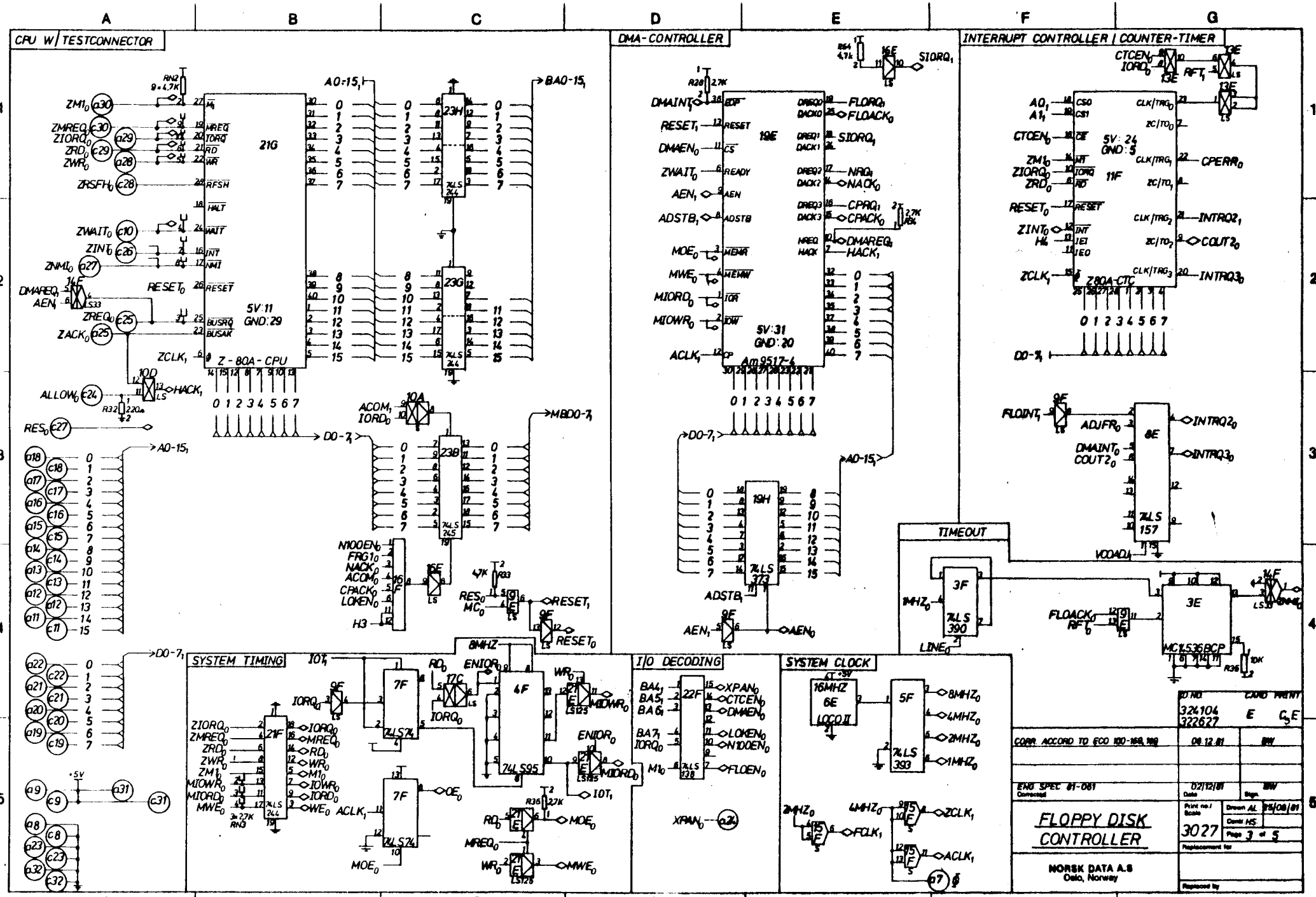
CPU W/TESTCONNECTOR
Z-80A-CPU
5V:11
GND:29
DMA-CONTROLLER
Am9517-4
5V:31
GND:20
INTERRUPT CONTROLLER / COUNTER-TIMER
Z80A-CTC
5V:24
GND:5
TIMEOUT
SYSTEM TIMING
I/O DECODING
SYSTEM CLOCK
16MHZ
MC1536BCP
FLOPPY DISK CONTROLLER
NORSK DATA A.S
Oslo, Norway
3027
Page 3 of 5

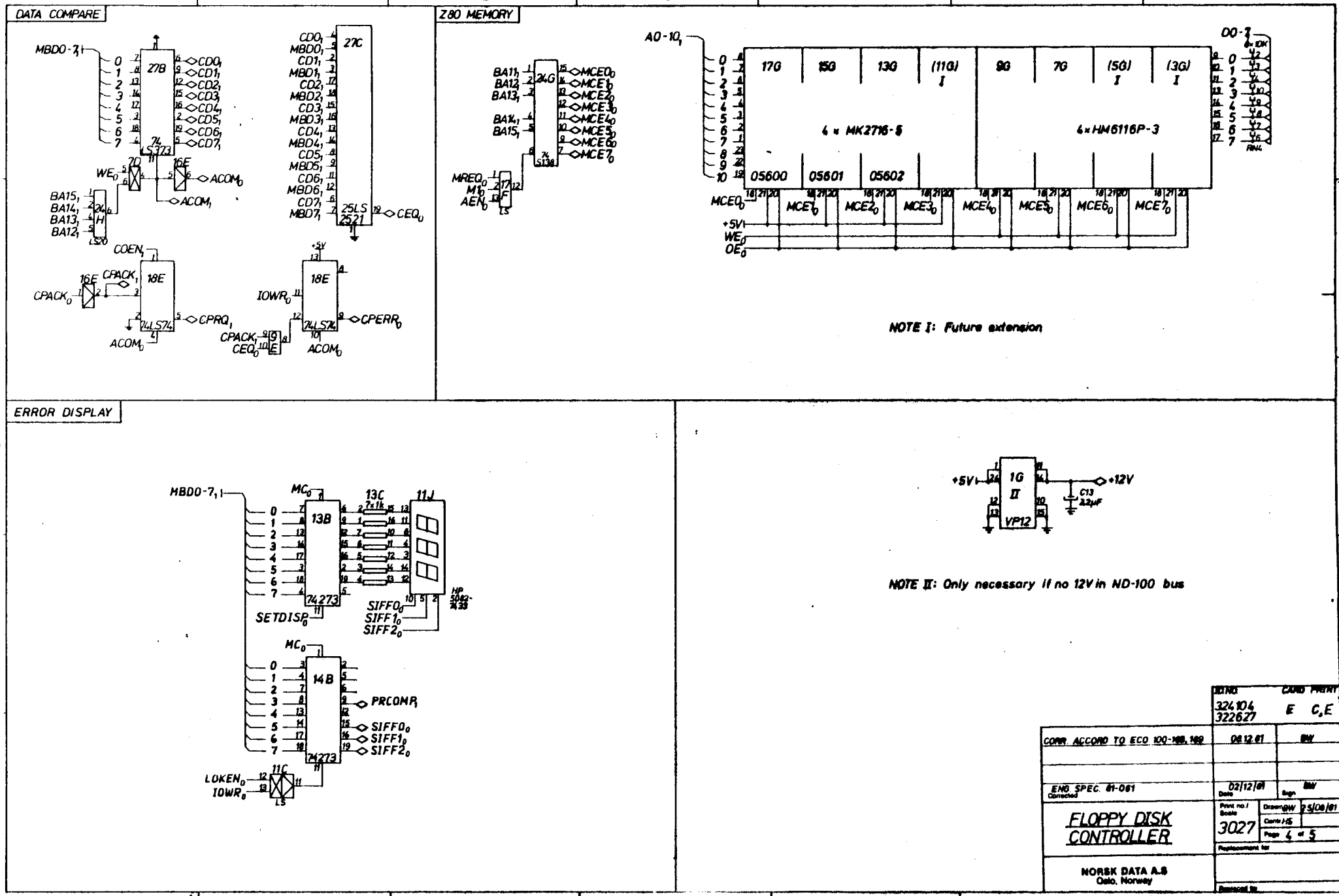
DATA COMPARE
Z80 MEMORY
ERROR DISPLAY
NOTE I: Future extension
NOTE II: Only necessary if no 12V in ND-100 bus
4 x MK2716-5
4 x HM6116P-3
FLOPPY DISK CONTROLLER
NORSK DATA A.S
Oslo, Norway
3027
Page 4 of 5
ENG. SPEC. 81-061
CORR. ACCORD TO ECO 100-168, 169
324104
322627

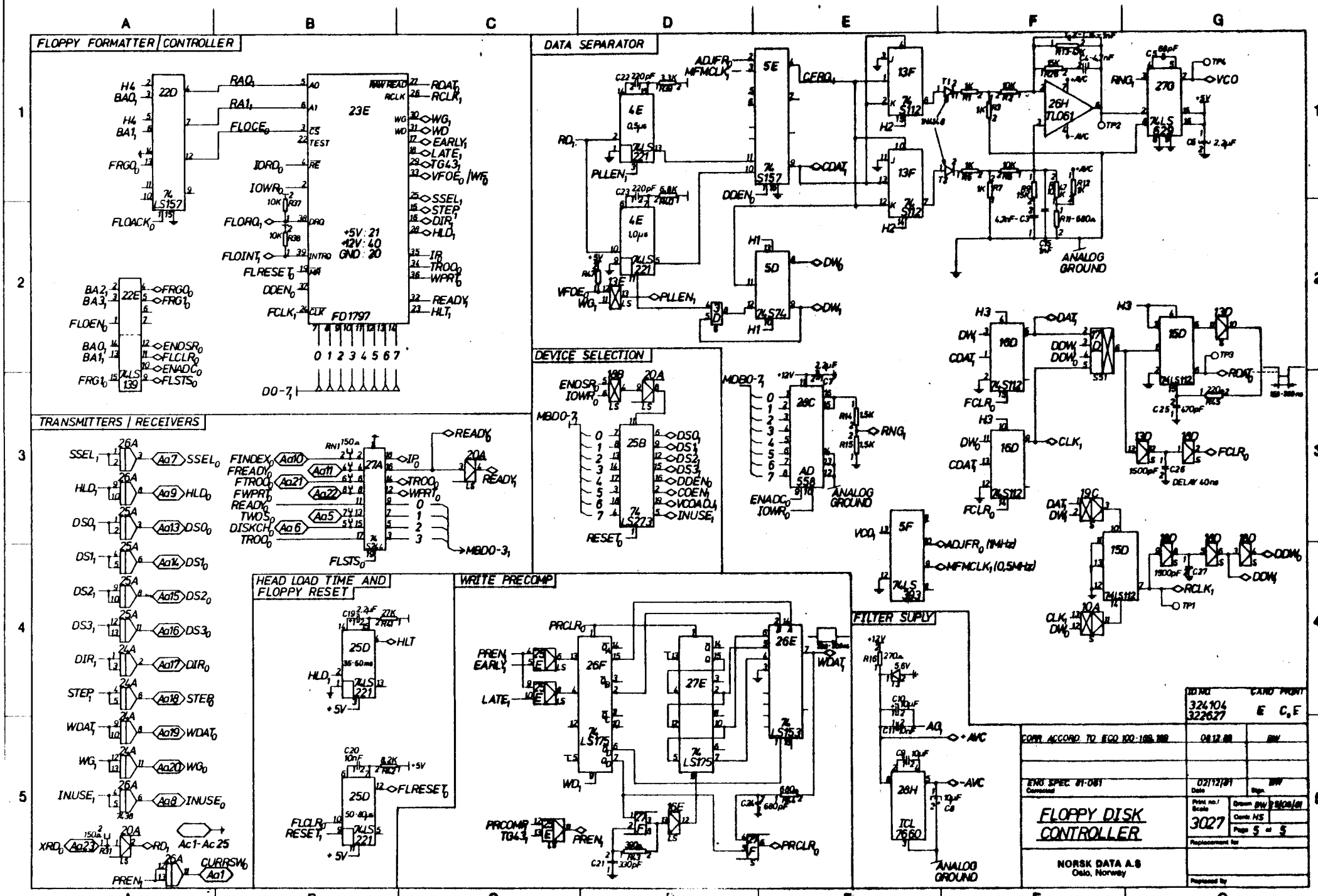
FLOPPY FORMATTER / CONTROLLER
DATA SEPARATOR
DEVICE SELECTION
TRANSMITTERS / RECEIVERS
HEAD LOAD TIME AND FLOPPY RESET
WRITE PRECOMP
FILTER SUPLY
23E
FD1797
+5V: 21
+12V: 40
GND: 20
ANALOG GROUND
FLOPPY DISK CONTROLLER
NORSK DATA A.S
Oslo, Norway
3027
324104
322627

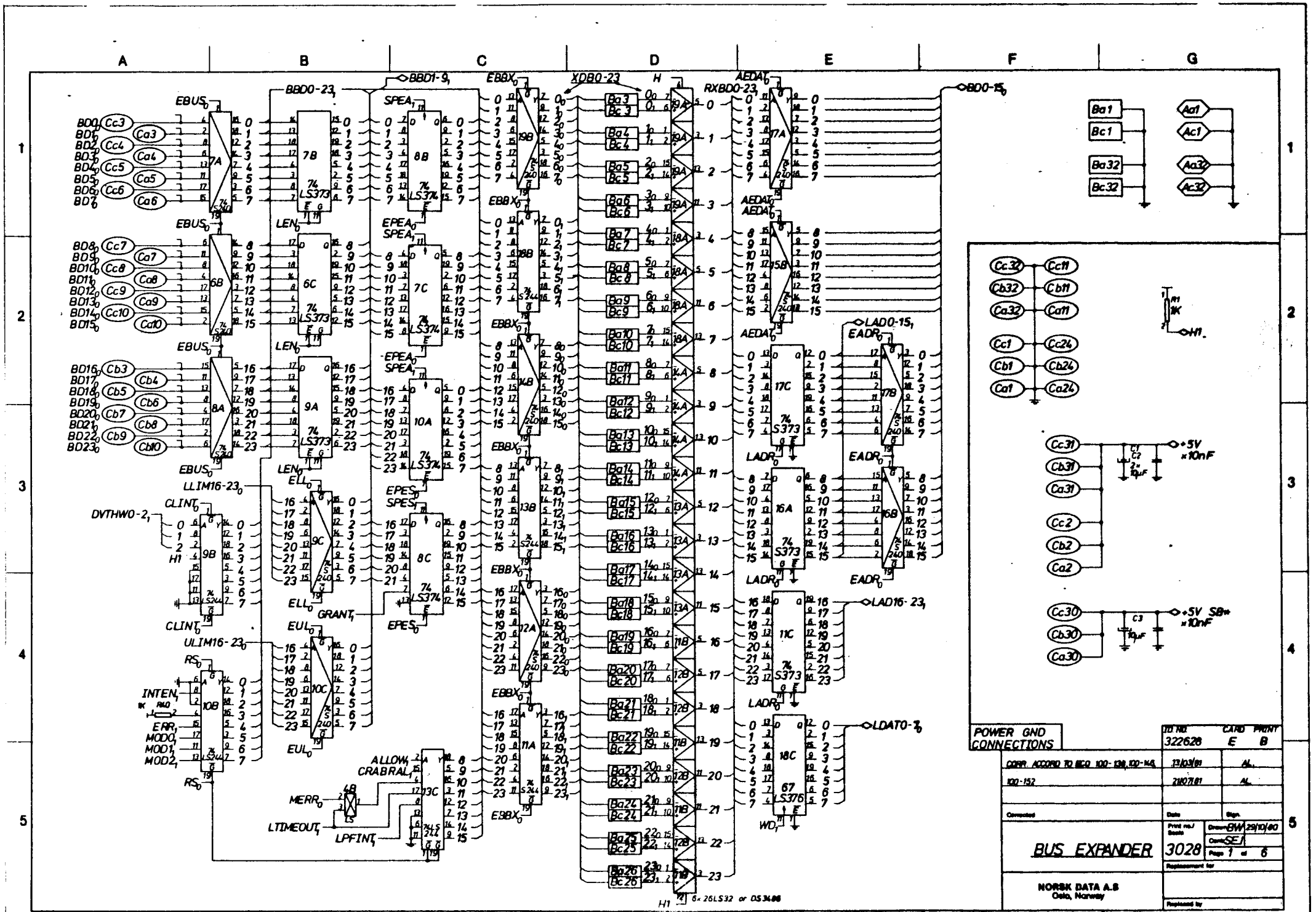
POWER GND CONNECTIONS
BUS EXPANDER
3028
NORSK DATA A.S
Oslo, Norway
322628
E
B
CORR. ACCORD TO ECO 100-130, 100-143
100-152
BW 29/10/80
SE1
Page 1 of 6
6x 26LS32 or DS3486
74 LS373
74 LS374
74 S373
74 S244
74 S240
67 LS376
+5V
x10nF
+5V SB
x10nF
BBD0-23
BBD1-9
XDB0-23
RXBD0-23
AEDAT
LADO-15
EADR
LAD16-23
LDAT0-7
BD0-15
LLIM16-23
ULIM16-23
DVTHW0-2
INTEN
ERR
MOD0
MOD1
MOD2
MERR
LTIMEOUT
LPFINT
ALLOW
CRABRAL
GRANT
LEN
ELL
EUL
EPEA
SPEA
EPES
SPES
EBUS
EBBX
CLINT
RS
WD

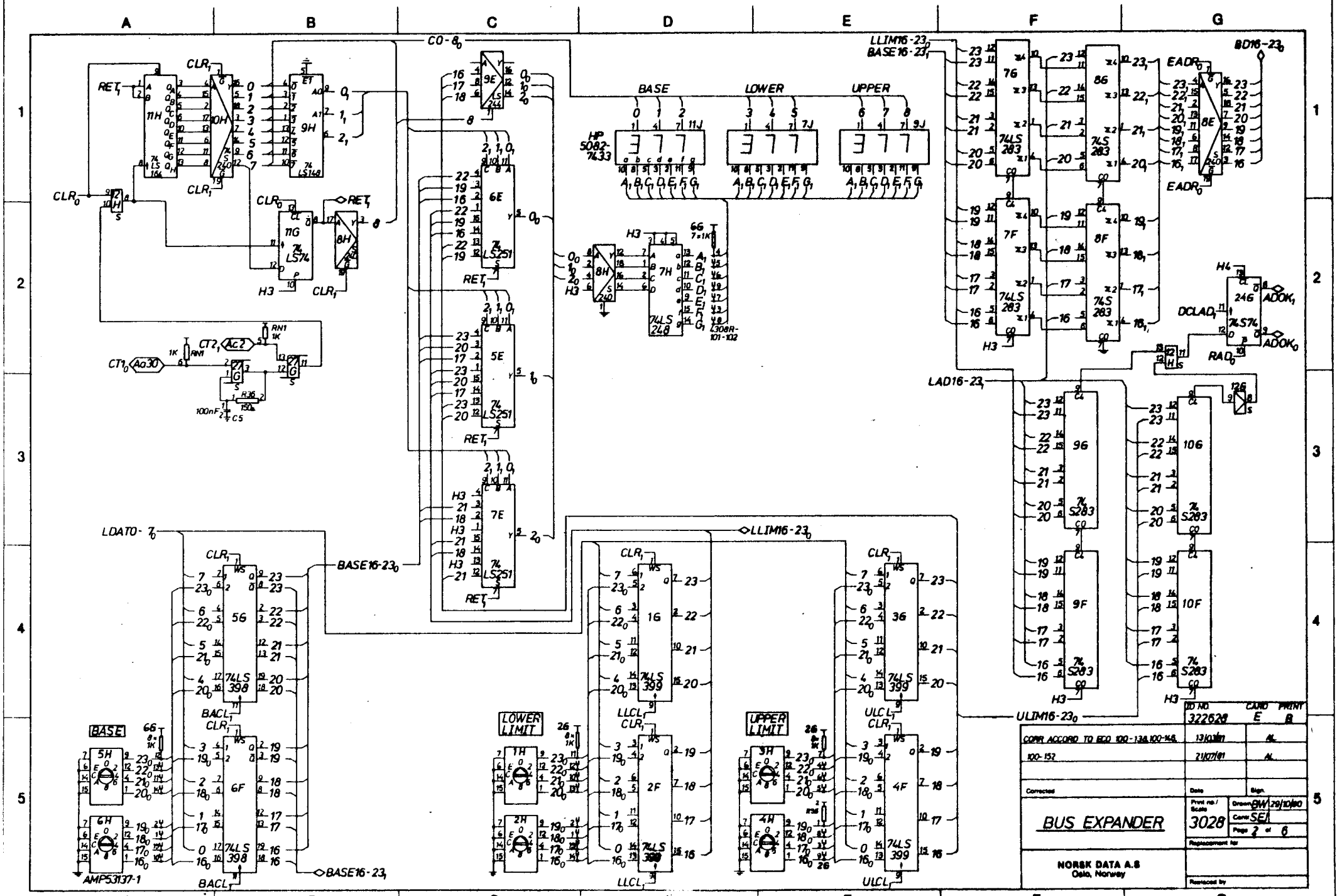
BUS EXPANDER
NORSK DATA A.S
Oslo, Norway
3028
SW 29/10/80
SEI
Page 2 of 6
322628
E
B
21/07/81
AL
BASE
LOWER
UPPER
LOWER LIMIT
UPPER LIMIT
HP 5082-7433
74LS 283
74LS 399
74LS 398
74LS 248
74LS 251
74LS 244
74LS 240
74LS 174
74LS 164
74LS 148
AMP53137-1
CO-8
LLIM16-23
BASE16-23
BD16-23
EADR
LAD16-23
ULIM16-23
LDATO-7
ADOK
DCLAD
RAD
CT2
CT0
CLR
RET
BACL
LLCL
ULCL

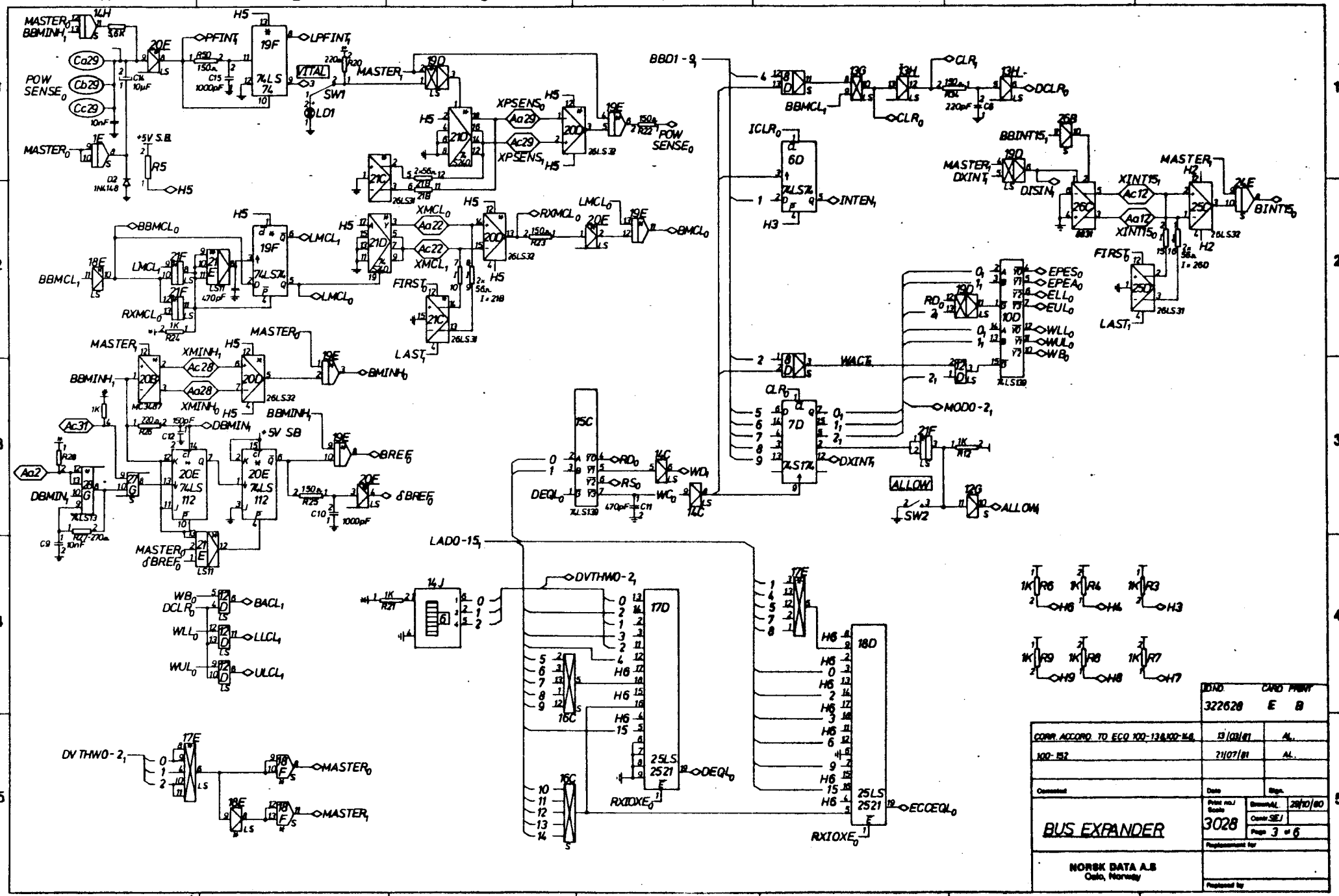
BUS EXPANDER
NORSK DATA A.S
Oslo, Norway
3028
322628
E B
CORR. ACCORD. TO ECO 100-136&100-148
13/03/81
100-152
21/07/81
29/10/80
Page 3 of 6

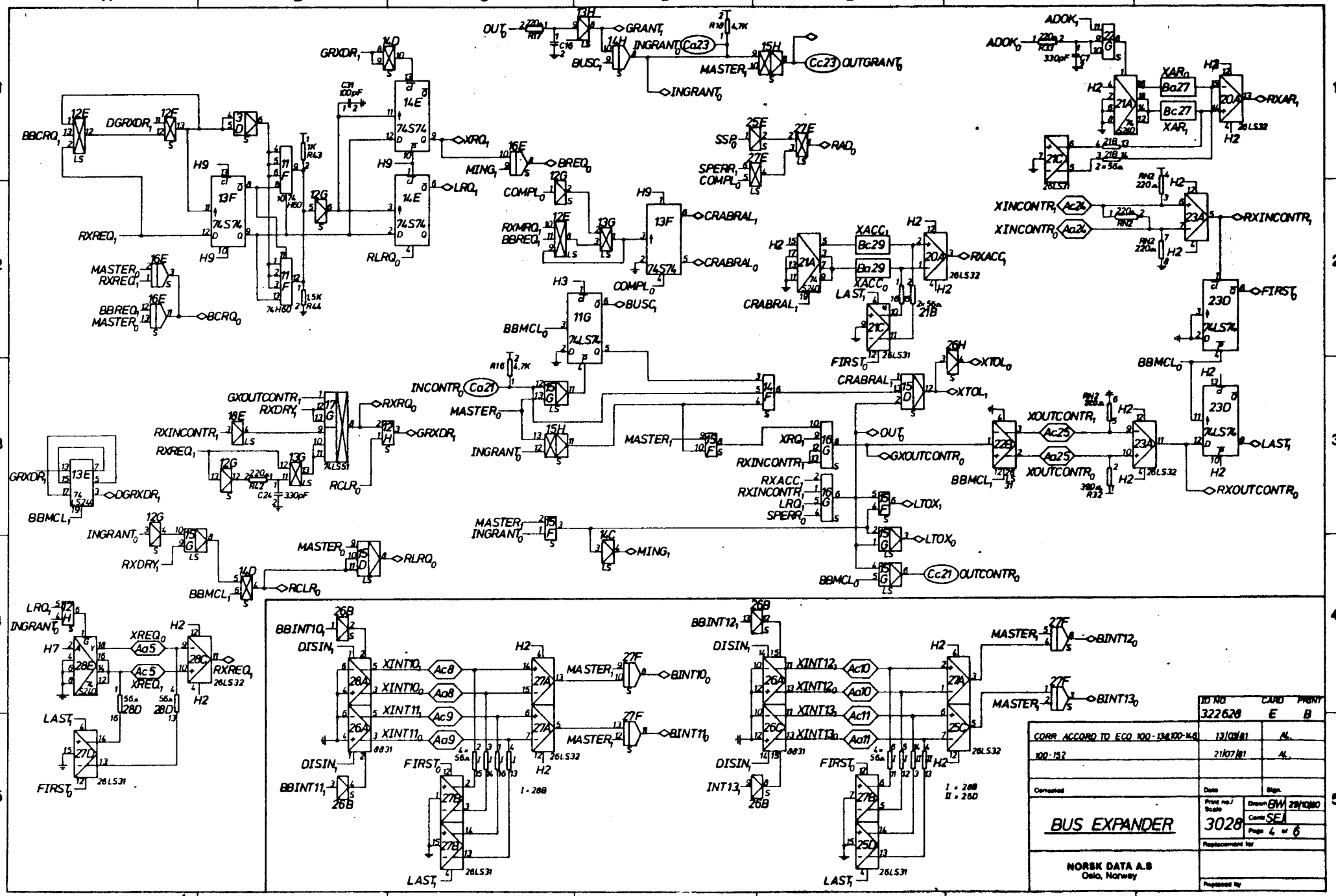
BUS EXPANDER
NORSK DATA A.S
Oslo, Norway
3028
322628
E
B
CORR ACCORD TO ECO 100-134,100-146
13/03/81
AL
100-152
21/07/81
AL
Drawn BW 29/10/80
Checked SEJ
Page 4 of 6
Replacement for
Replaced by
Corrected
Date
Sign.
Print no./Scale
ID NO
CARD
PRINT
74S74
74LS74
74LS51
74S240
74H60
26LS31
26LS32
8831
BBCRQ1
DGRXDR1
RXREQ1
MASTER0
RXREQ1
BBREQ1
MASTER0
BCRQ0
GRXDR1
XRQ1
LRQ1
MING1
BREQ0
COMPL0
RXMRQ1
BBREQ1
CRABRAL1
CRABRAL0
BUSC1
BBMCL0
INCONTR0
MASTER0
INGRANT0
GXOUTCONTR1
RXDRY1
RXINCONTR1
RXREQ1
RXRQ0
GRXDR1
RCLR0
DGRXDR1
BBMCL1
INGRANT0
RXDRY1
MASTER0
RLRQ0
BBMCL1
RCLR0
OUT0
GRANT1
INGRANT0
BUSC1
INGRANT0
MASTER1
OUTGRANT0
SSP0
SPERR1
COMPL0
RAD0
XACC1
XACC0
LAST1
FIRST0
CRABRAL1
XTOL0
XTOL1
XRQ1
RXINCONTR1
RXACC
LRQ1
SPERR0
LTOX1
LTOX0
BBMCL0
OUTCONTR0
MASTER1
INGRANT0
MING1
ADOK0
ADOK1
XAR0
XAR1
RXAR1
XINCONTR1
XINCONTR0
RXINCONTR1
FIRST0
BBMCL0
XOUTCONTR1
XOUTCONTR0
BBMCL1
LAST1
RXOUTCONTR0
LRQ1
INGRANT0
XREQ0
XREQ1
RXREQ1
LAST1
FIRST0
BBINT10
DISIN1
XINT10
XINT10
XINT11
XINT11
BBINT11
FIRST0
LAST1
MASTER1
BINT10
BINT11
BBINT12
DISIN1
XINT12
XINT12
XINT13
XINT13
INT13
BINT12
BINT13
I = 28B
II = 28D

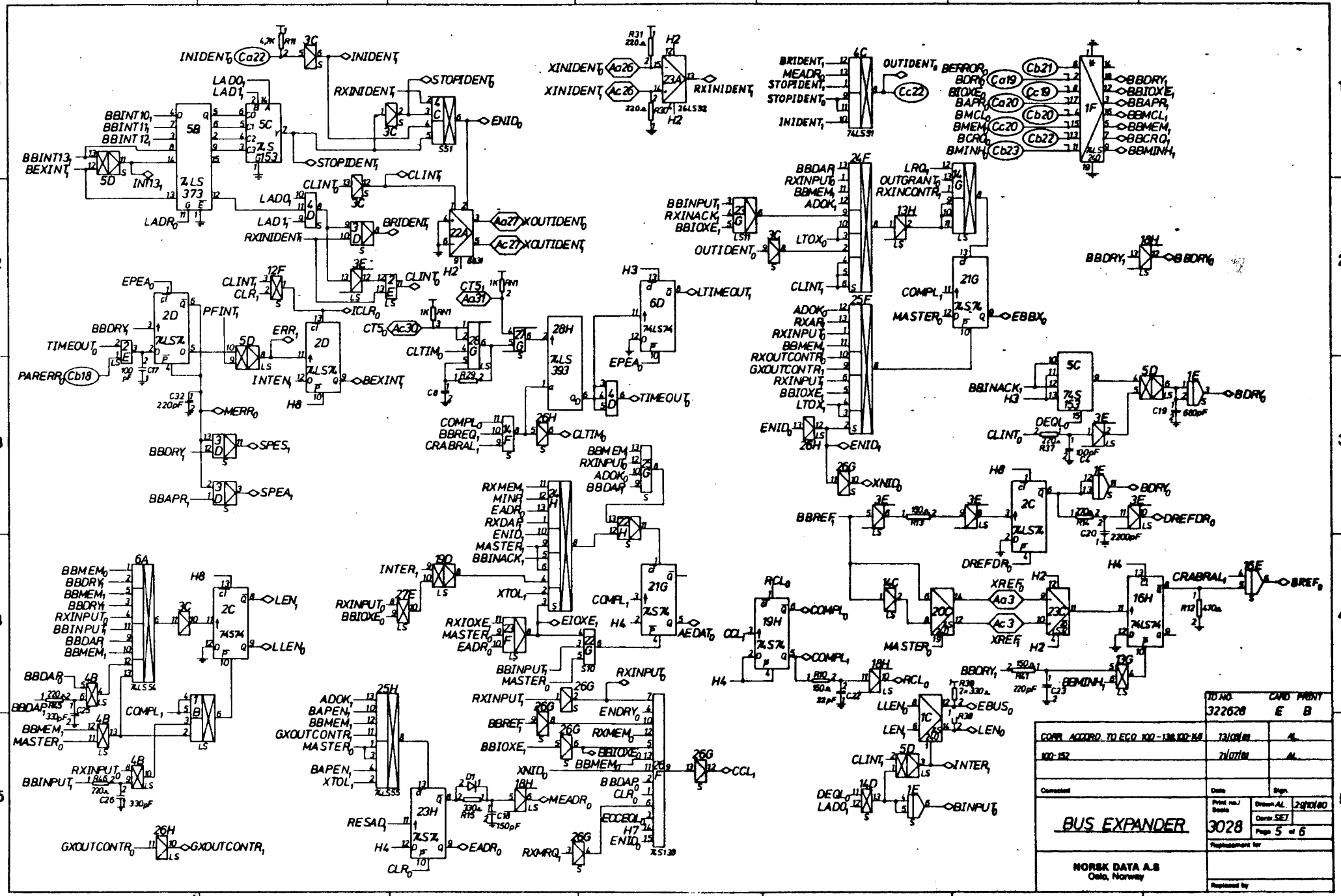
BUS EXPANDER
3028
NORSK DATA A.S
Oslo, Norway
Page 5 of 6
Drawn AL 29/10/80
Contr. SET
TO NO. 322628
CARD PRINT E B
CORR. ACCORD. TO ECO 100-138,100-146
100-152
13/08/80 AL
21/07/80 AL

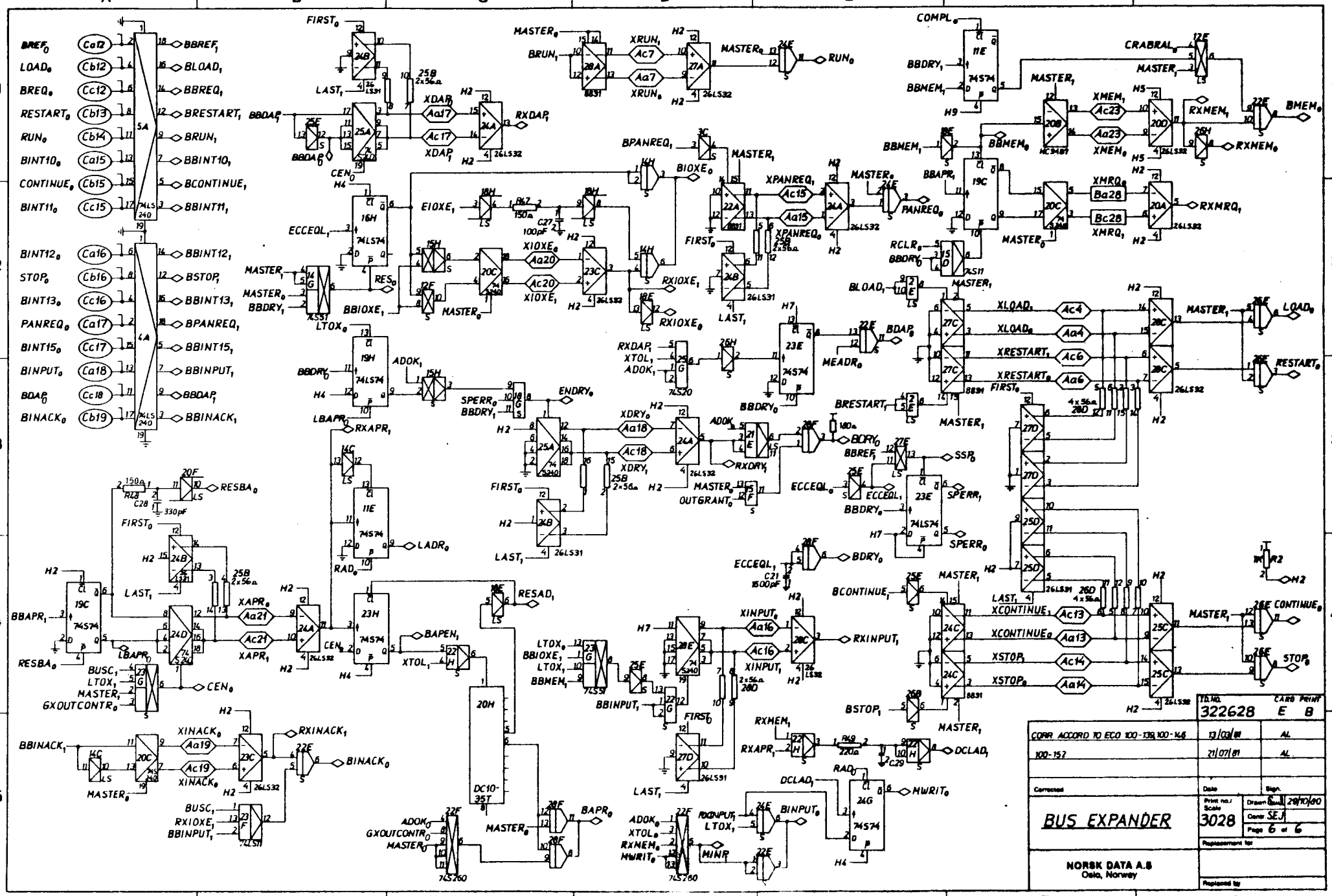
BUS EXPANDER
NORSK DATA A.S
Oslo, Norway
322628
CORR ACCORD TO ECO 100-139, 100-146
100-152
3028
Page 6 of 6

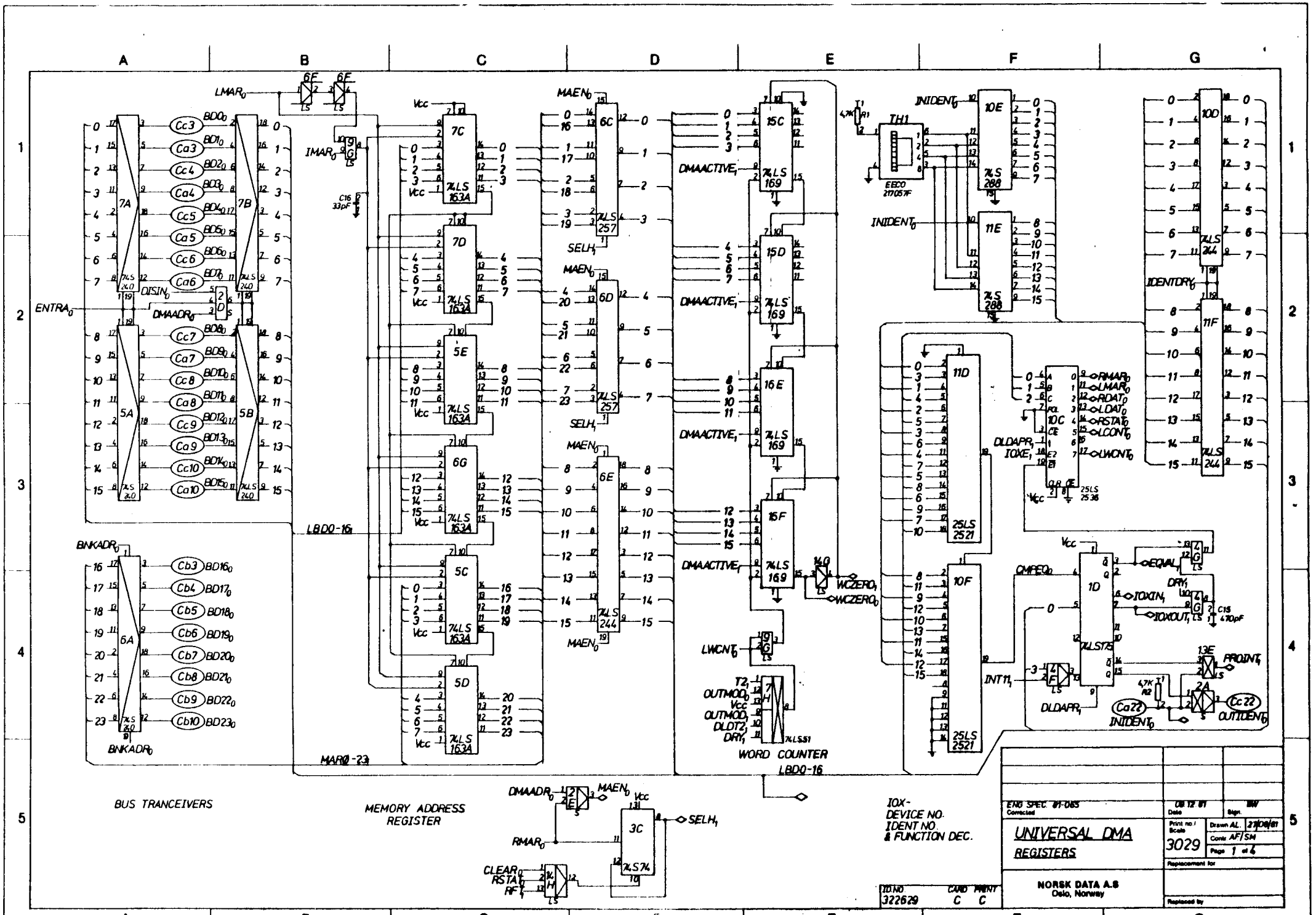
BUS TRANCEIVERS
MEMORY ADDRESS REGISTER
WORD COUNTER
IOX-
DEVICE NO.
IDENT NO.
& FUNCTION DEC.
UNIVERSAL DMA
REGISTERS
NORSK DATA A.S
Oslo, Norway
3029
Page 1 of 4
322629

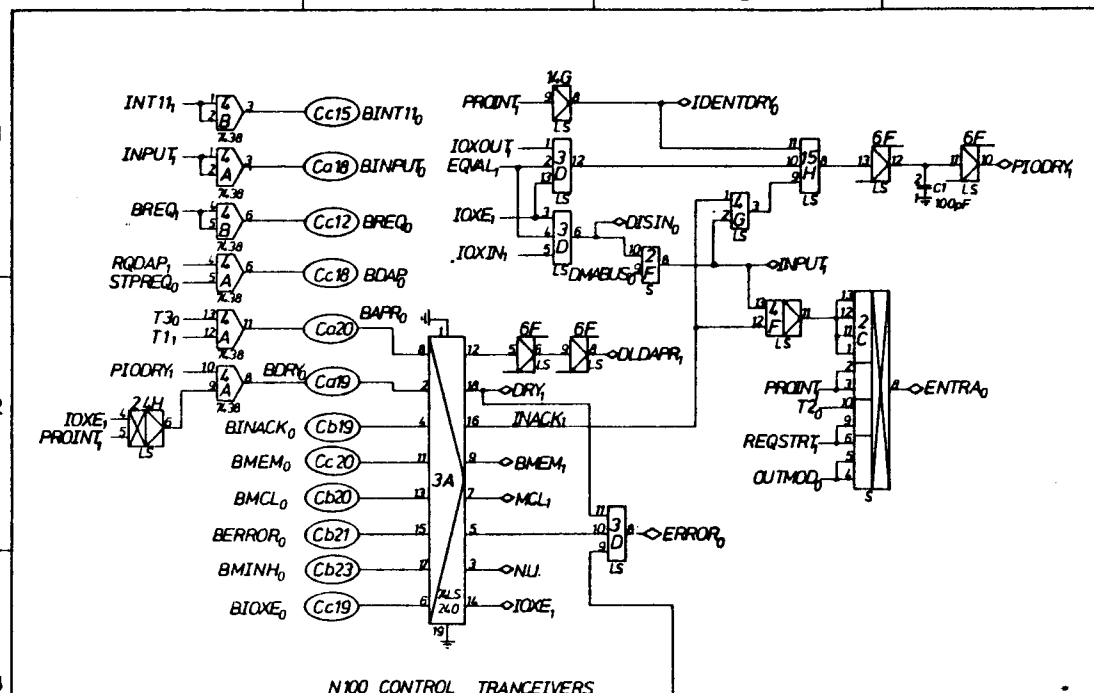

N100 CONTROL TRANCEIVERS

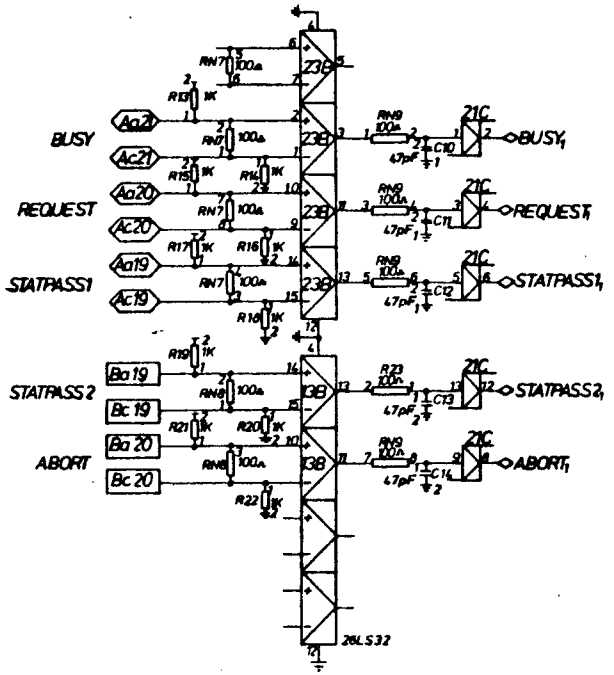

INPUT CONTROL SIGNALS

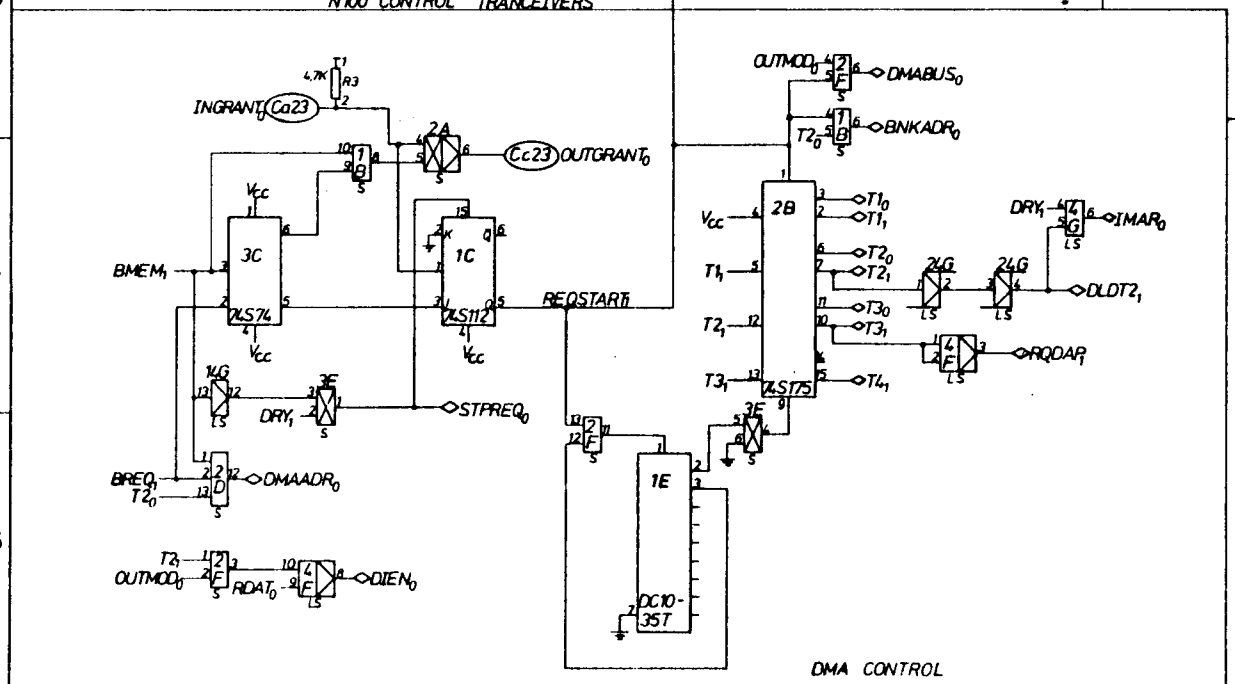

DMA CONTROL

ID NO.	CARD PRINT	
322629	C	C

Corrected | Date | Sign.

UNIVERSAL DMA
CONTROL 1

Print no./Scale: 3029
Drawn AL. 27/08/81
Contr AF/SM
Page 2 of 4
Replacement for

NORSK DATA A.S
Oslo, Norway

Replaced by

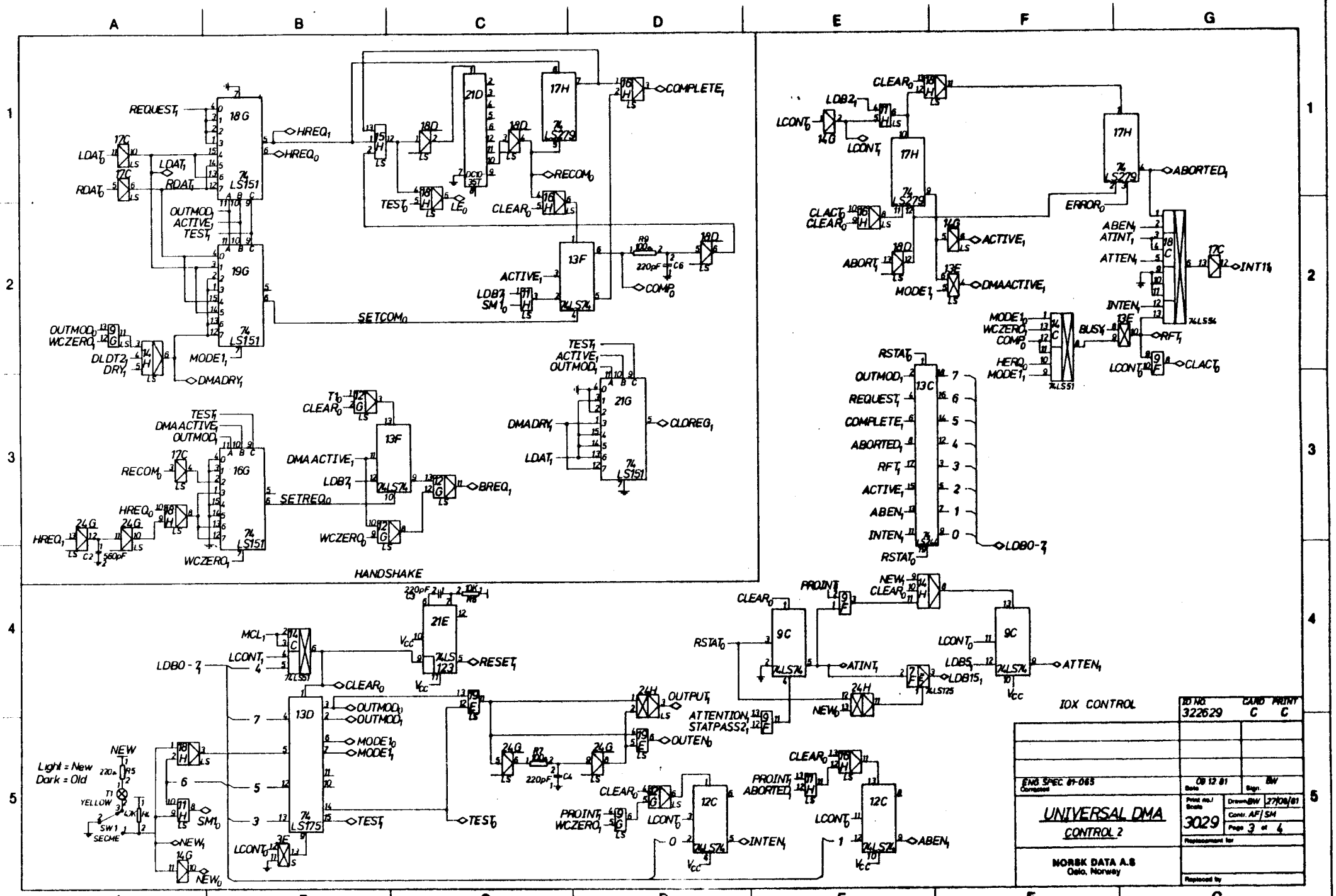
HANDSHAKE
IOX CONTROL
ID NO. 322629
CARD C
PRINT C
ENG SPEC 81-065
Compared
Date 08 12 81
Sign. BW
UNIVERSAL DMA
CONTROL 2
Print no./ Scale 3029
Drawn BW 27/08/81
Contr. AF/SM
Page 3 of 4
Replacement for
Replaced by
NORSK DATA A.S
Oslo, Norway
Light = New
Dark = Old

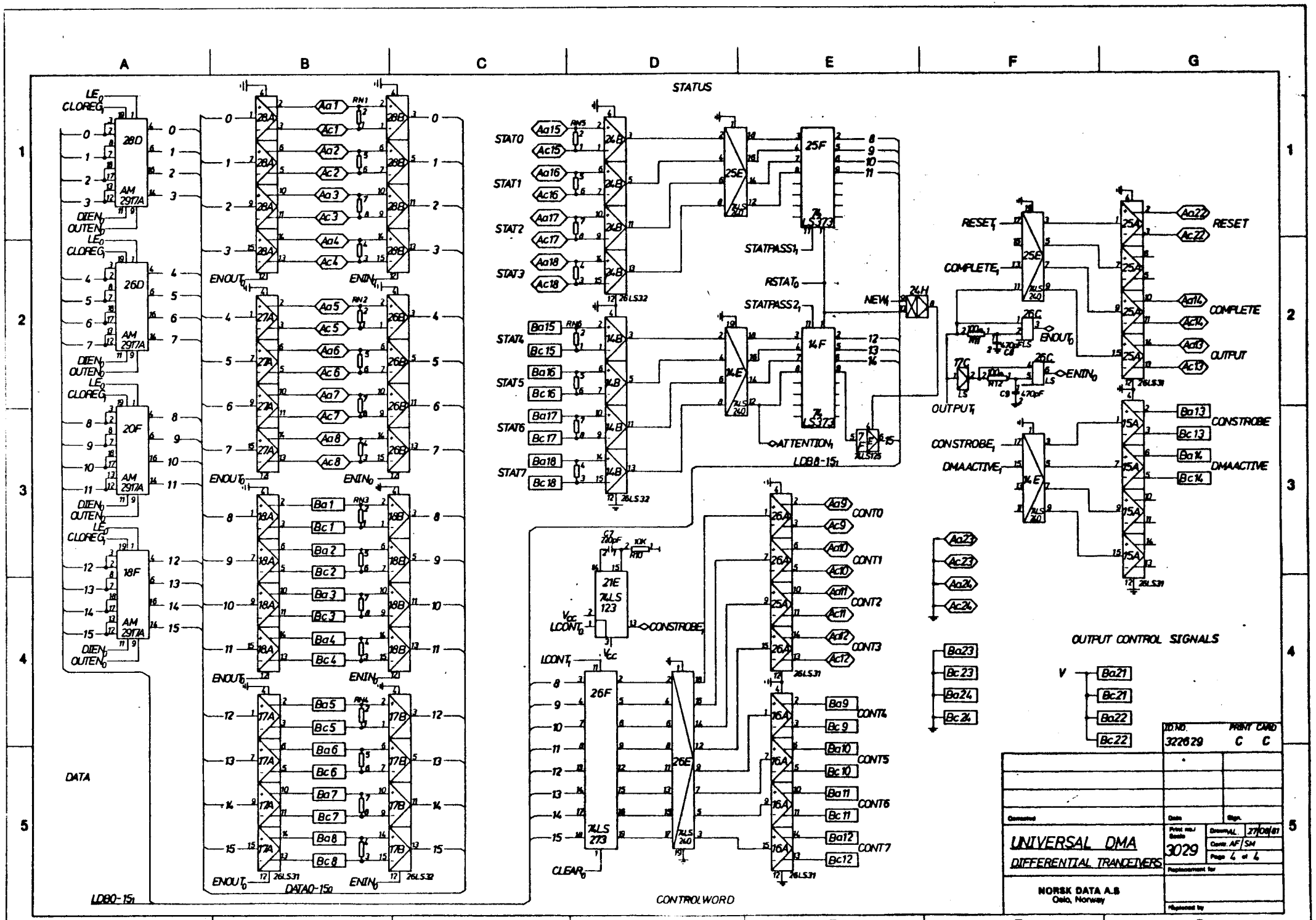
STATUS
DATA
CONTROLWORD
OUTPUT CONTROL SIGNALS
LDB0-15
DATA0-15
UNIVERSAL DMA
DIFFERENTIAL TRANCEIVERS
NORSK DATA A.S
Oslo, Norway
3029
3226 29
C C
27/08/81
Page 4 of 4

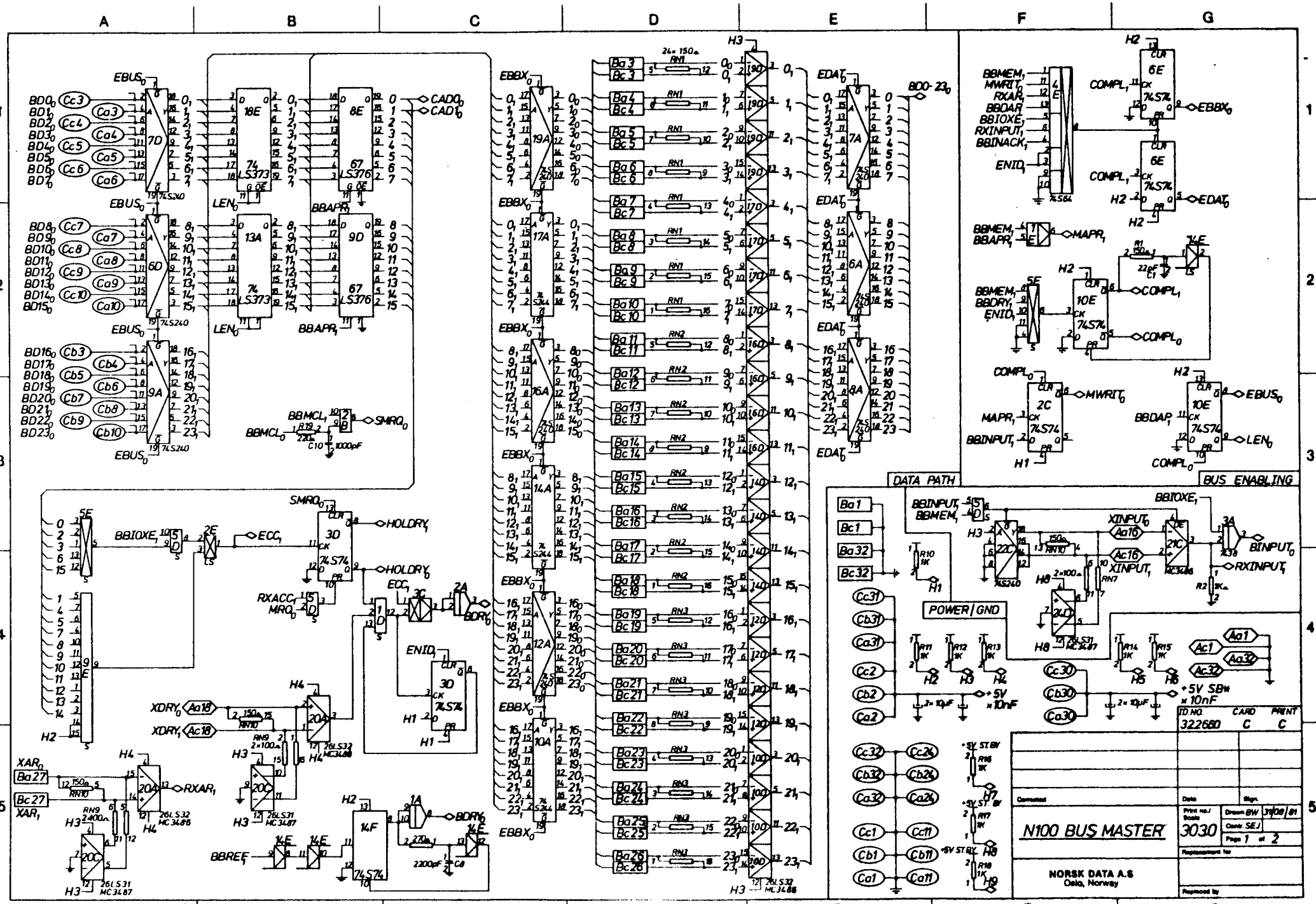
DATA PATH
BUS ENABLING
POWER/GND
N100 BUS MASTER
NORSK DATA A.S
Oslo, Norway
ID NO. 322680
CARD C
PRINT C
Scale 3030
Drawn BW 31/08/81
Page 1 of 2

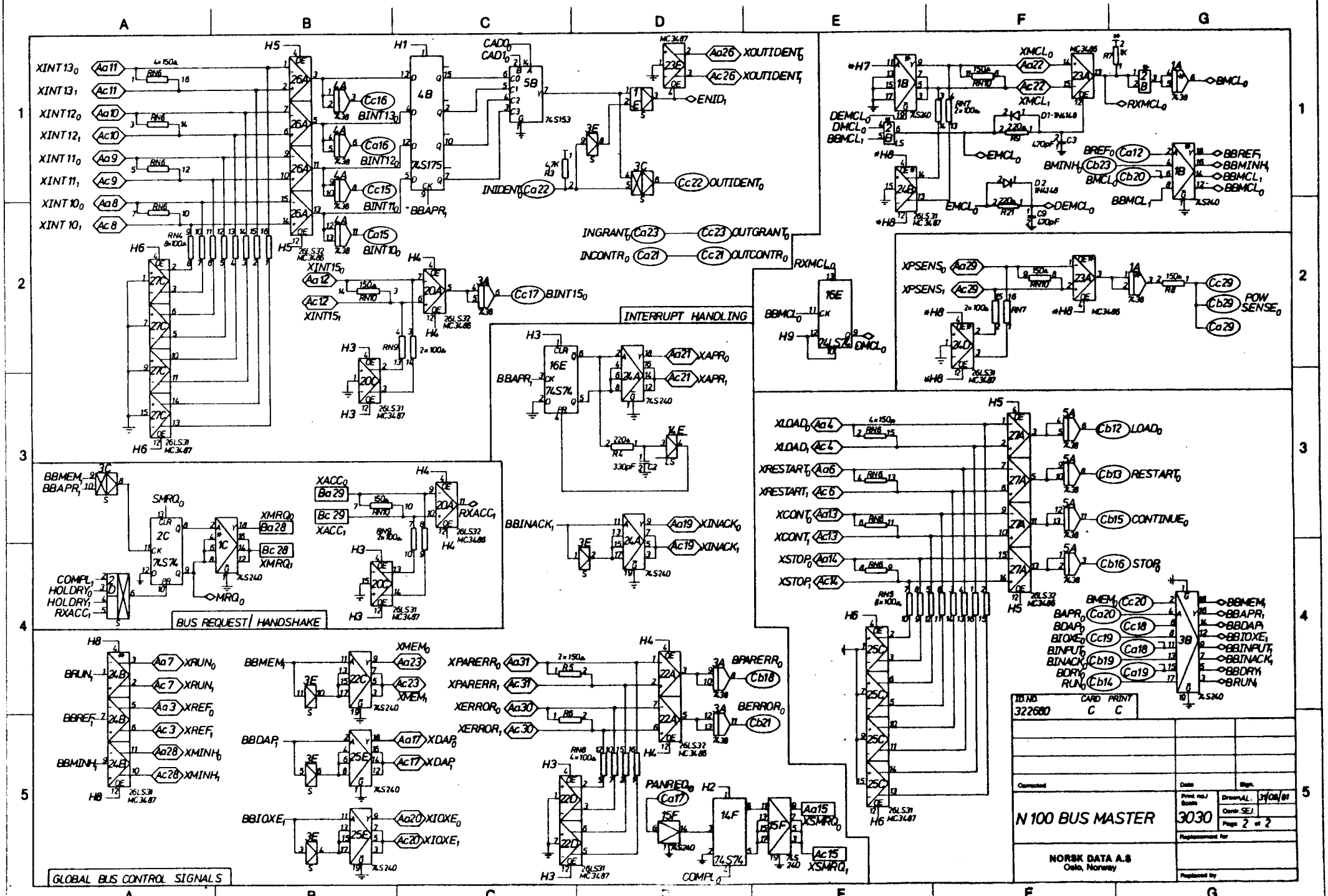
INTERRUPT HANDLING
BUS REQUEST/ HANDSHAKE
GLOBAL BUS CONTROL SIGNALS
ID.NO. 322680
CARD C
PRINT C
N 100 BUS MASTER
3030
NORSK DATA A.S
Oslo, Norway

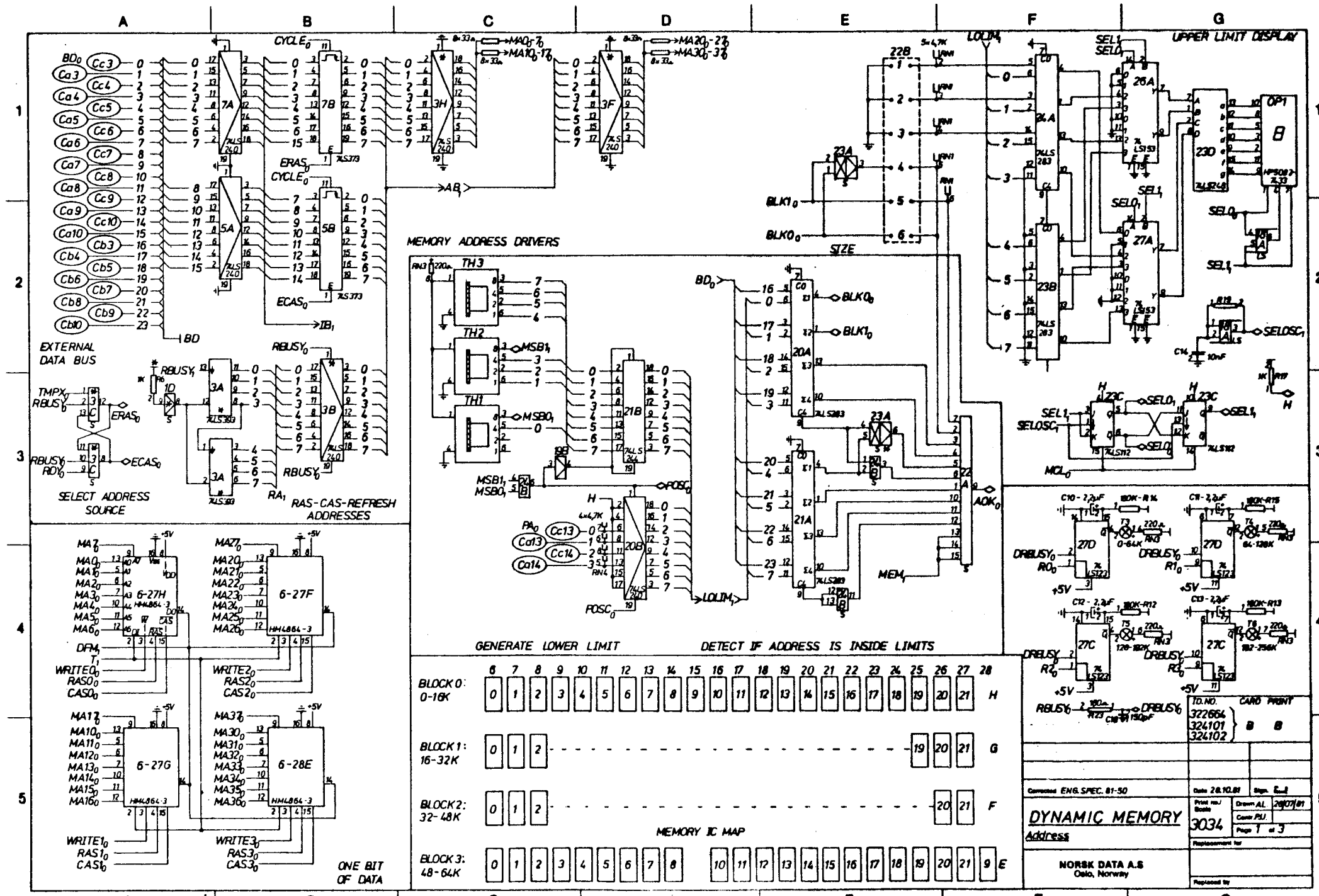
EXTERNAL DATA BUS
SELECT ADDRESS SOURCE
RAS-CAS-REFRESH ADDRESSES
MEMORY ADDRESS DRIVERS
SIZE
UPPER LIMIT DISPLAY
GENERATE LOWER LIMIT
DETECT IF ADDRESS IS INSIDE LIMITS
MEMORY IC MAP
BLOCK 0: 0-16K
BLOCK 1: 16-32K
BLOCK 2: 32-48K
BLOCK 3: 48-64K
ONE BIT OF DATA
DYNAMIC MEMORY
Address
NORSK DATA A.S
Oslo, Norway
ENG. SPEC. 81-50
3034

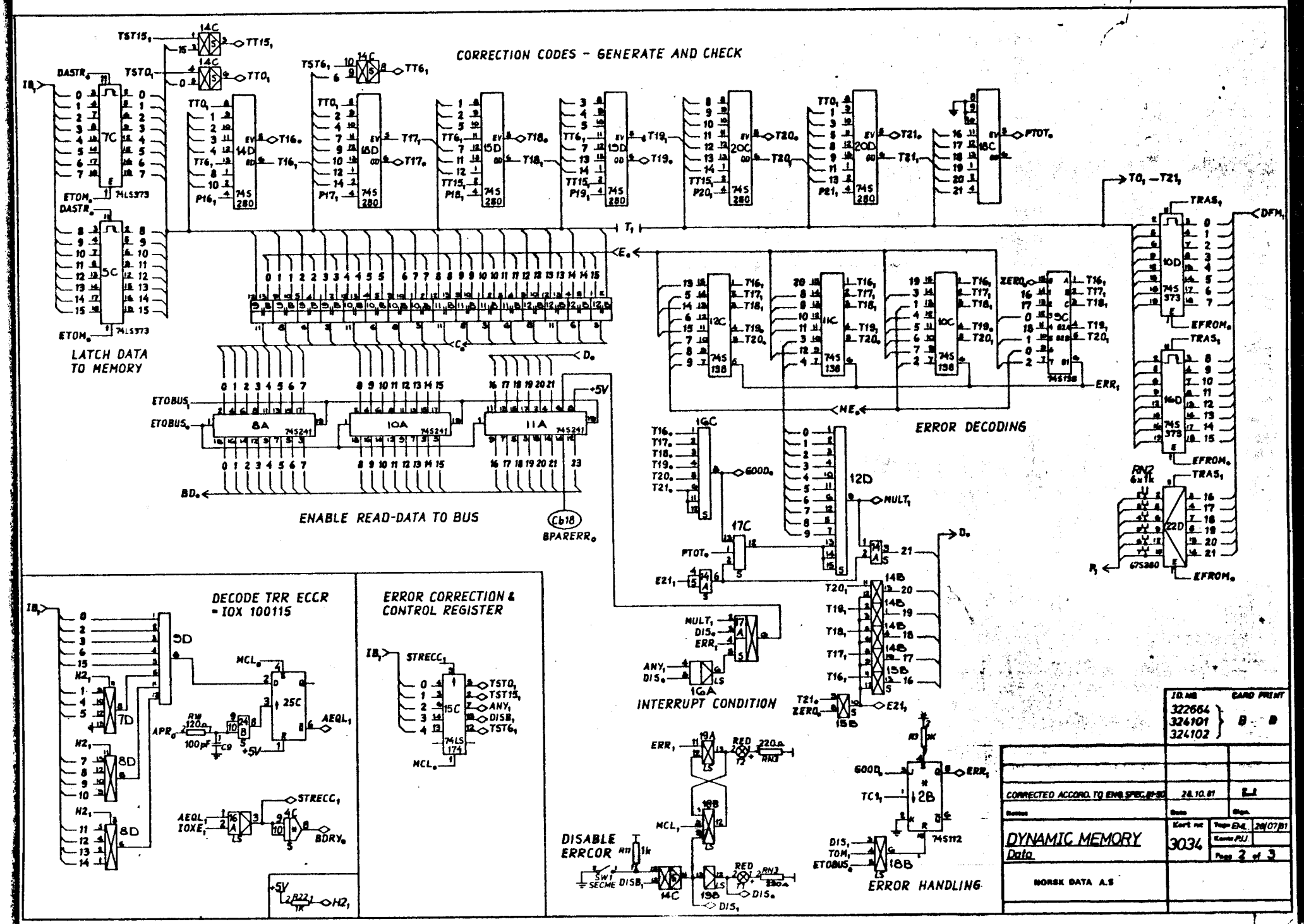
CORRECTION CODES - GENERATE AND CHECK
LATCH DATA TO MEMORY
ENABLE READ-DATA TO BUS
ERROR DECODING
DECODE TRR ECCR = IOX 100115
ERROR CORRECTION & CONTROL REGISTER
INTERRUPT CONDITION
DISABLE ERRCOR
ERROR HANDLING
DYNAMIC MEMORY
Data
NORSK DATA A.S
3034
CORRECTED ACCORD. TO ENG. SPEC.
28.10.81
322664
324101
324102
B - B
Page 2 of 3

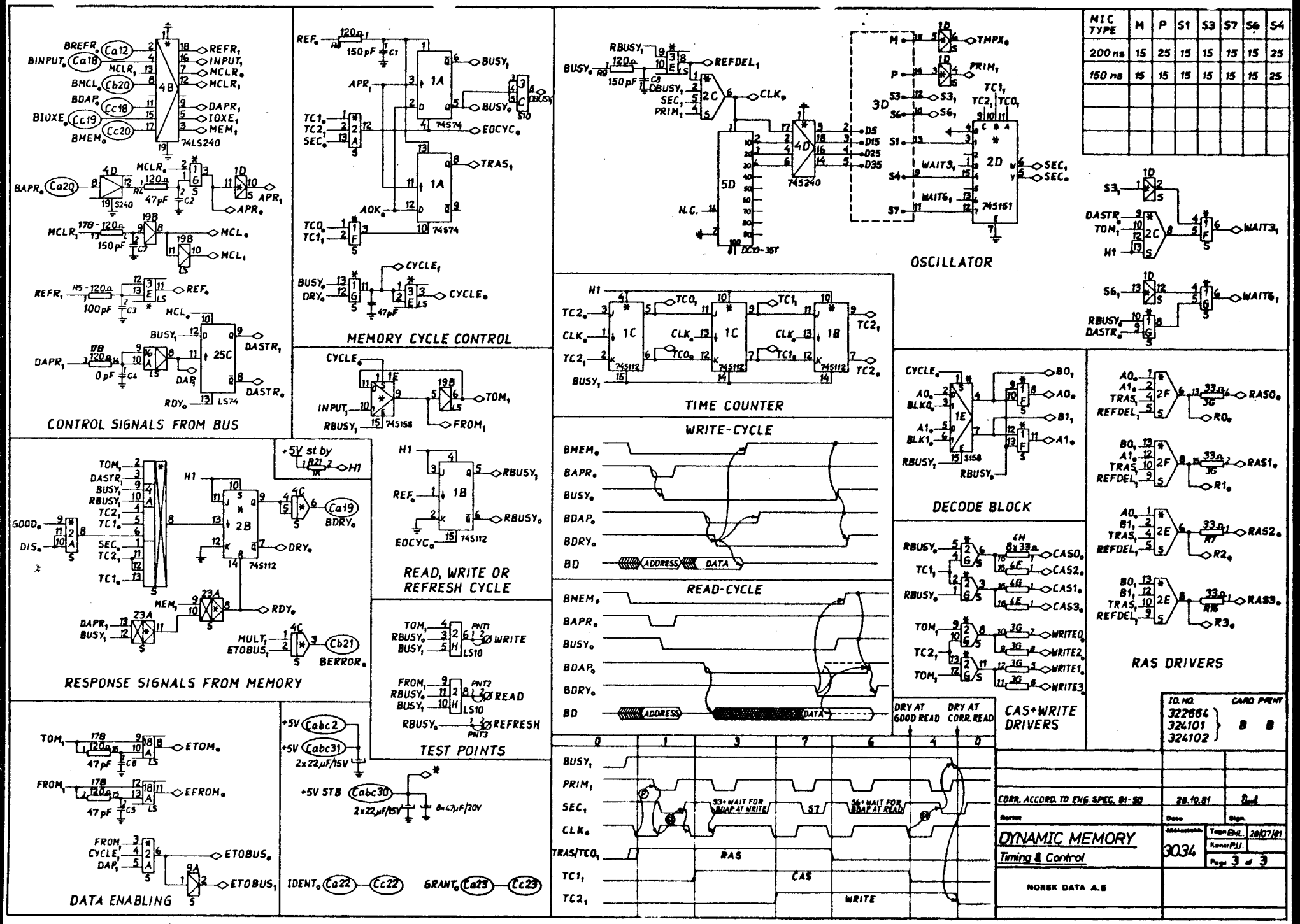

MIC TYPE	M	P	S1	S3	S7	S6	S4
200 ns	15	25	15	15	15	15	25
150 ns	15	15	15	15	15	15	25

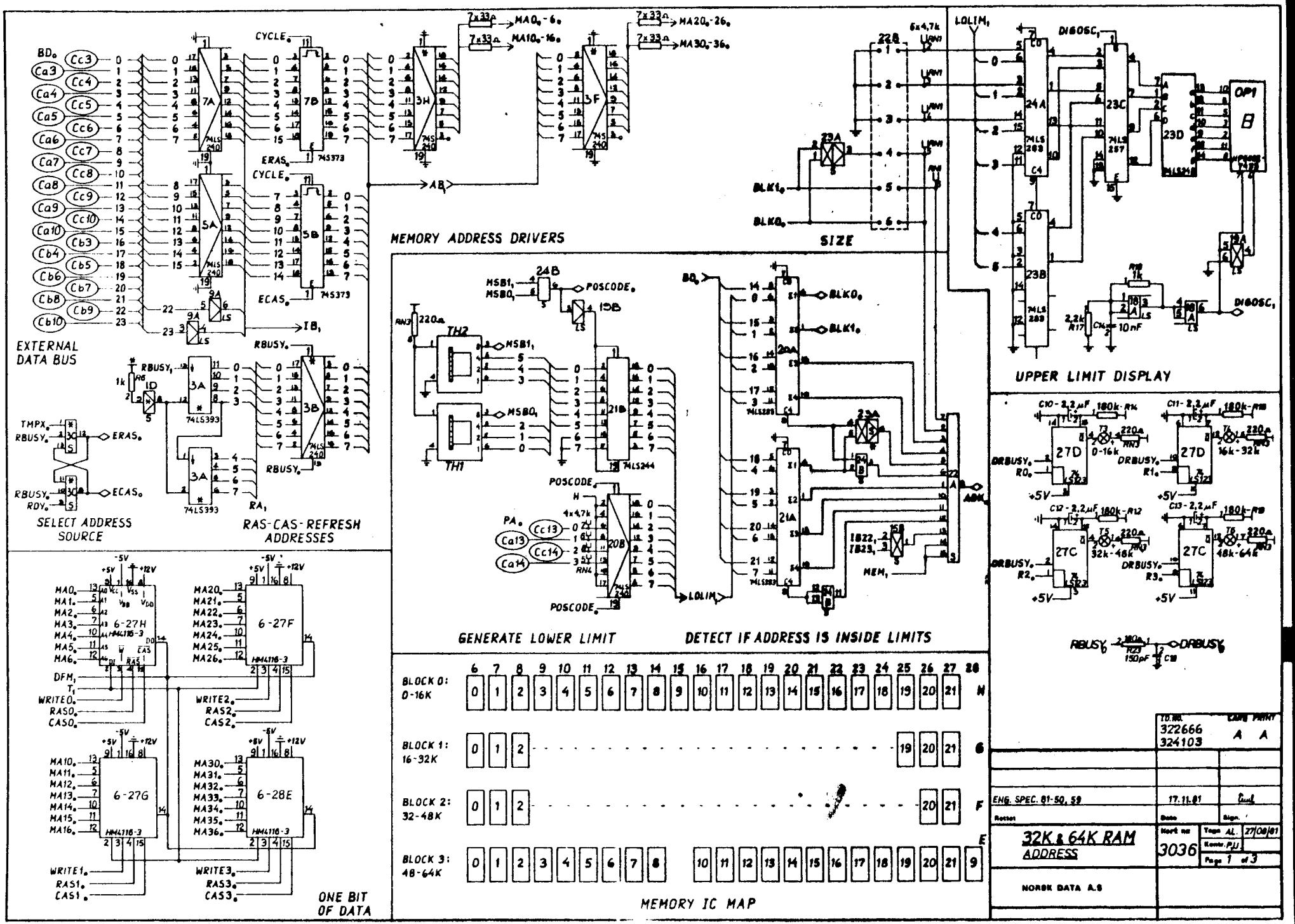
EXTERNAL DATA BUS
MEMORY ADDRESS DRIVERS
SIZE
UPPER LIMIT DISPLAY
SELECT ADDRESS SOURCE
RAS-CAS-REFRESH ADDRESSES
GENERATE LOWER LIMIT
DETECT IF ADDRESS IS INSIDE LIMITS
ONE BIT OF DATA
MEMORY IC MAP
BLOCK 0: 0-16K
BLOCK 1: 16-32K
BLOCK 2: 32-48K
BLOCK 3: 48-64K
32K & 64K RAM ADDRESS
NORSK DATA A.S
ENG. SPEC. 81-50, 59
17.11.81
3036
27/08/81
Page 1 of 3
322666
324103

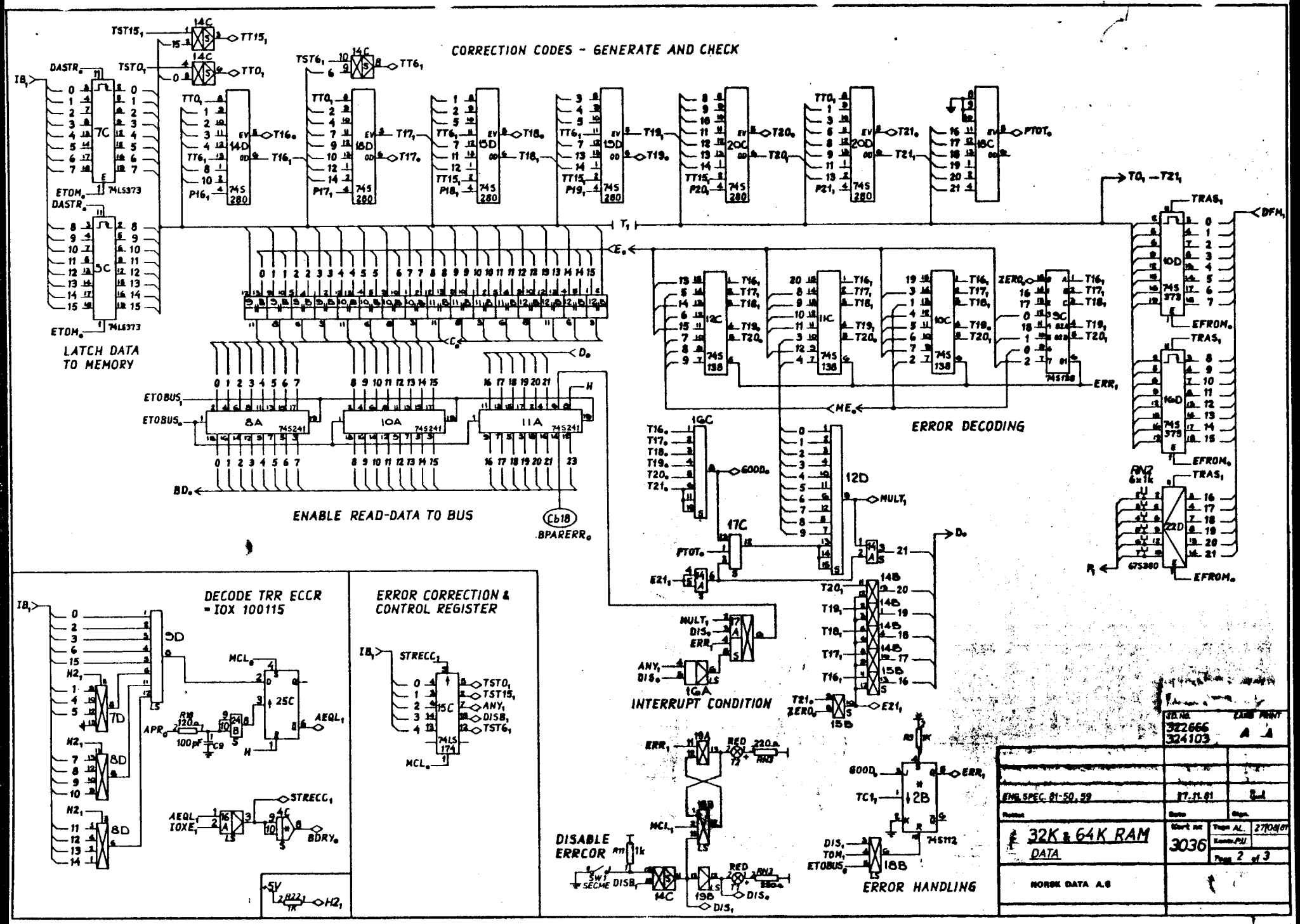
CORRECTION CODES - GENERATE AND CHECK
LATCH DATA TO MEMORY
ENABLE READ-DATA TO BUS
ERROR DECODING
DECODE TRR ECCR = IOX 100115
ERROR CORRECTION & CONTROL REGISTER
INTERRUPT CONDITION
DISABLE ERRCOR
ERROR HANDLING
BPARERR
32K & 64K RAM DATA
NORSK DATA A.S
3036
Page 2 of 3

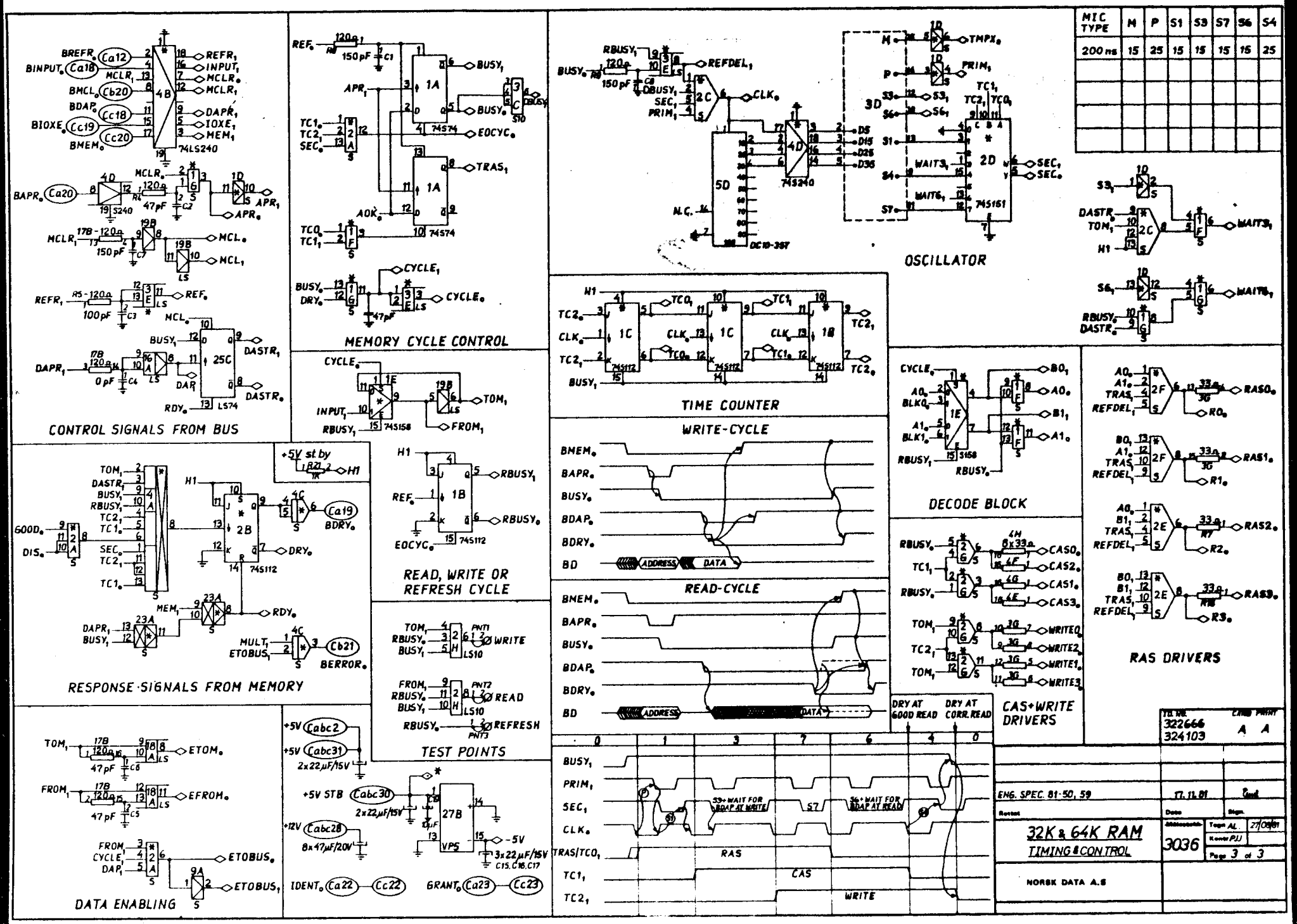
CONTROL SIGNALS FROM BUS
MEMORY CYCLE CONTROL
OSCILLATOR
TIME COUNTER
WRITE-CYCLE
READ-CYCLE
DECODE BLOCK
RAS DRIVERS
RESPONSE SIGNALS FROM MEMORY
READ, WRITE OR REFRESH CYCLE
CAS+WRITE DRIVERS
TEST POINTS
DATA ENABLING
DRY AT 600D READ
DRY AT CORR. READ
ADDRESS
DATA
RAS
CAS
WRITE
S7
33+ WAIT FOR BDAP AT WRITE
36+ WAIT FOR BDAP AT READ
MIC TYPE
M P S1 S3 S7 S6 S4
200 ns 15 25 15 15 15 15 25
ENG. SPEC. 81-50, 59
17.11.81
32K & 64K RAM
TIMING & CONTROL
3036
Page 3 of 3
NORSK DATA A.S
322666
324103

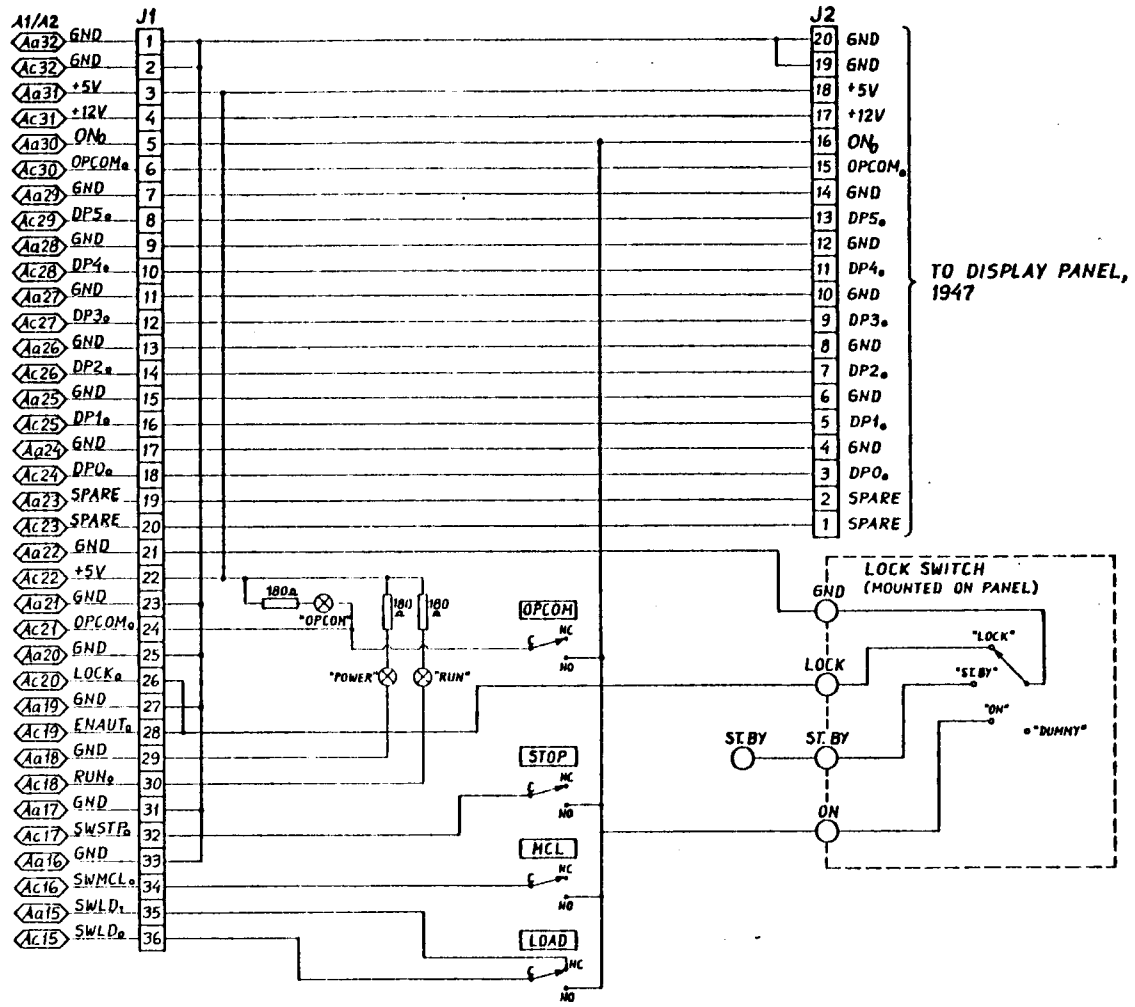

ID NO. 322690	CARD PRINT D C	
CORRECTED ACCORDING TO ECO 100-59	14 12 79	BW
Corrected	Date	Sign
PANEL CONTROL N-100	Print no 1946	Drawn 25.05.79 Chk SEJ Page 1 of 1
NORSK DATA A.S Oslo, Norway	7B30	

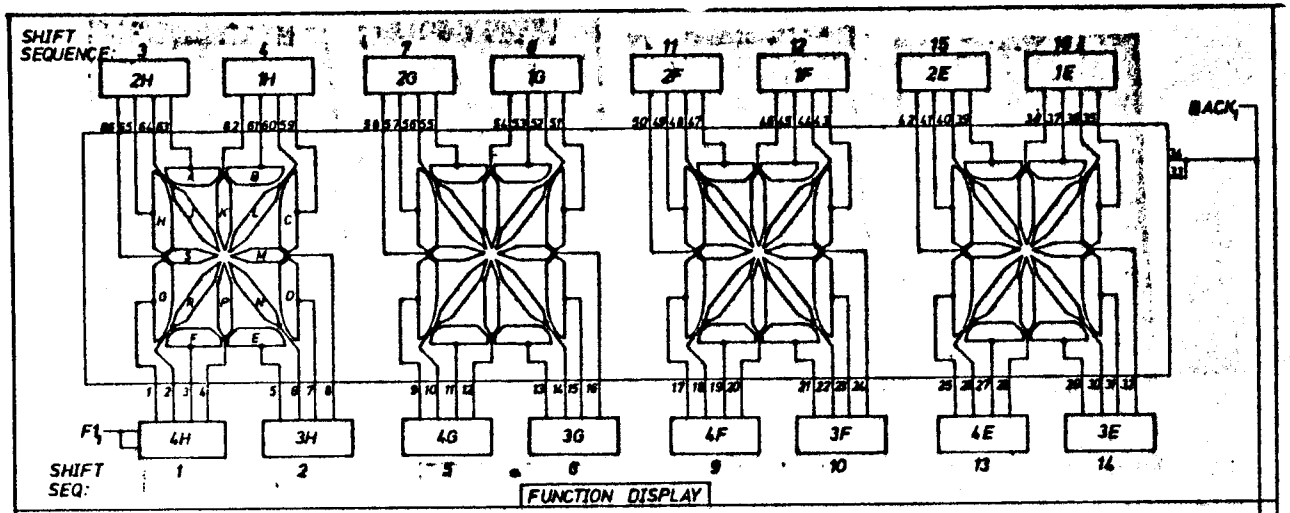

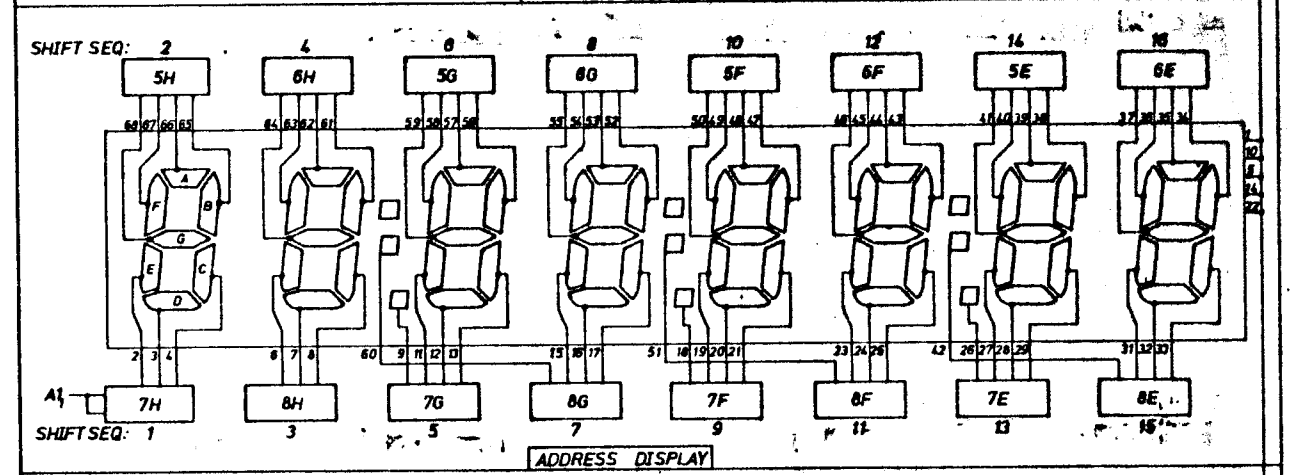

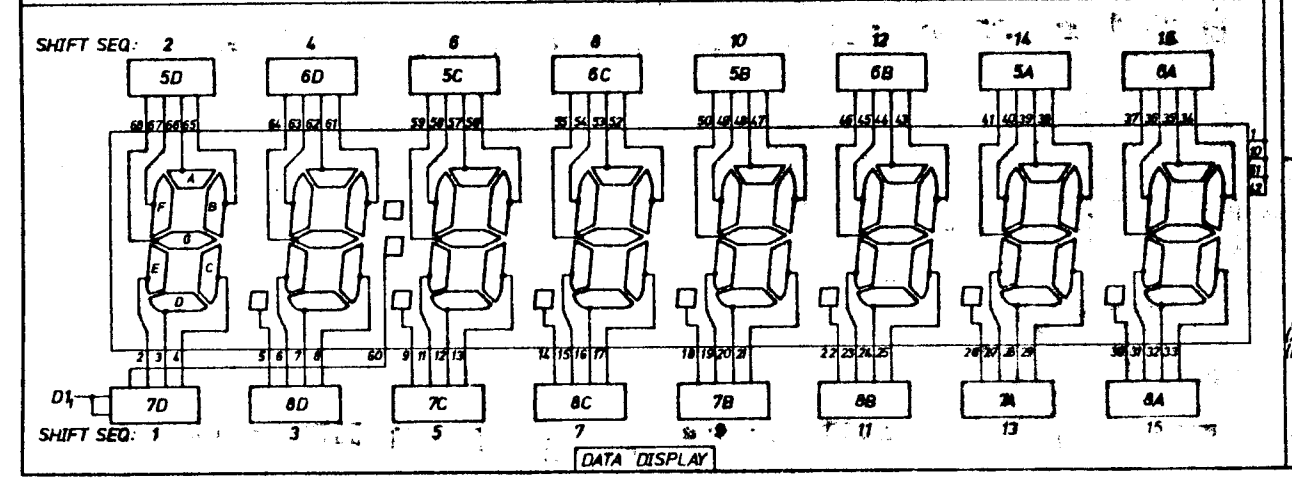

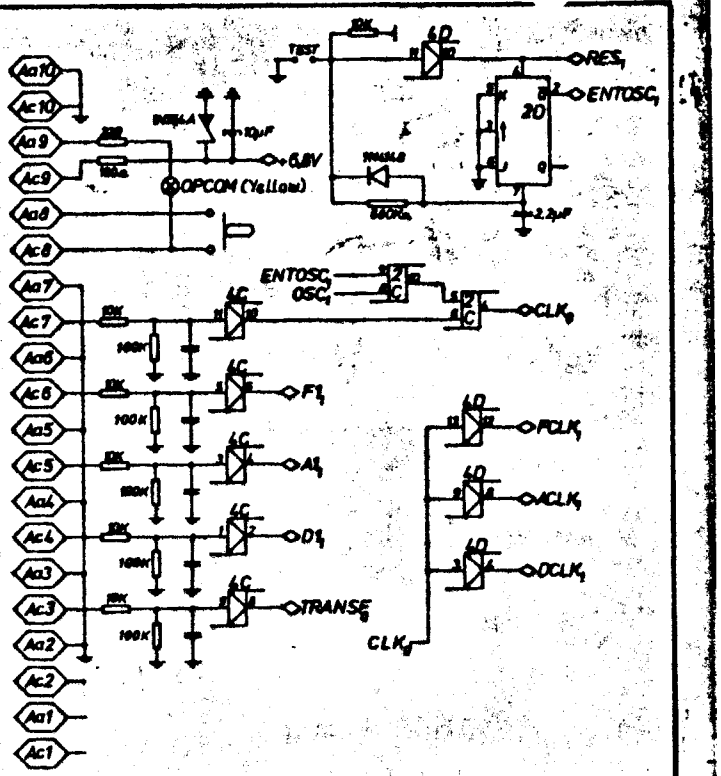

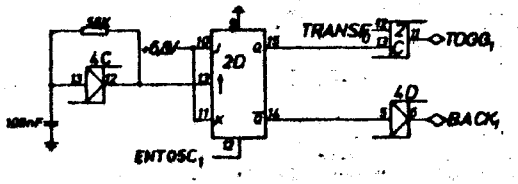

CMOS IC's

1= DISPLAY 78107R106H or SX423	48 stk	SCL 4035B
2= DISPLAY 65107R096H or SX180	2 stk	MM 74C914
	1 stk	SCL 4027B
	1 stk	SCL 4093B

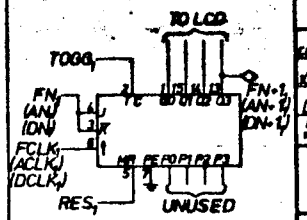

ALL DISPLAY DRIVERS ARE SHIFT REGISTER : 4035B

	10.NO. 322691	CARD PRINT E C
CORR. ACCORD TO ENG. SPEC. 20-11, LCD 100-144	15.12.79	
100-170	26.09.81	BW
Div. rettelser ENG. SPEC. 81-054	26.6.79 28/10/81	PJJ/BW BW
DISPLAY PANEL N100	Print no. 1947	Tegn. BW 15.5.79 Kontr. PJJ Godk.
A/S NORSK DATA-ELEKTRONIKK		

A/S NORSK DATA-ELEKTRONIKK	Title RF ADAPTER 1 1951	ID.NO. 322762	CARD PRINT A A

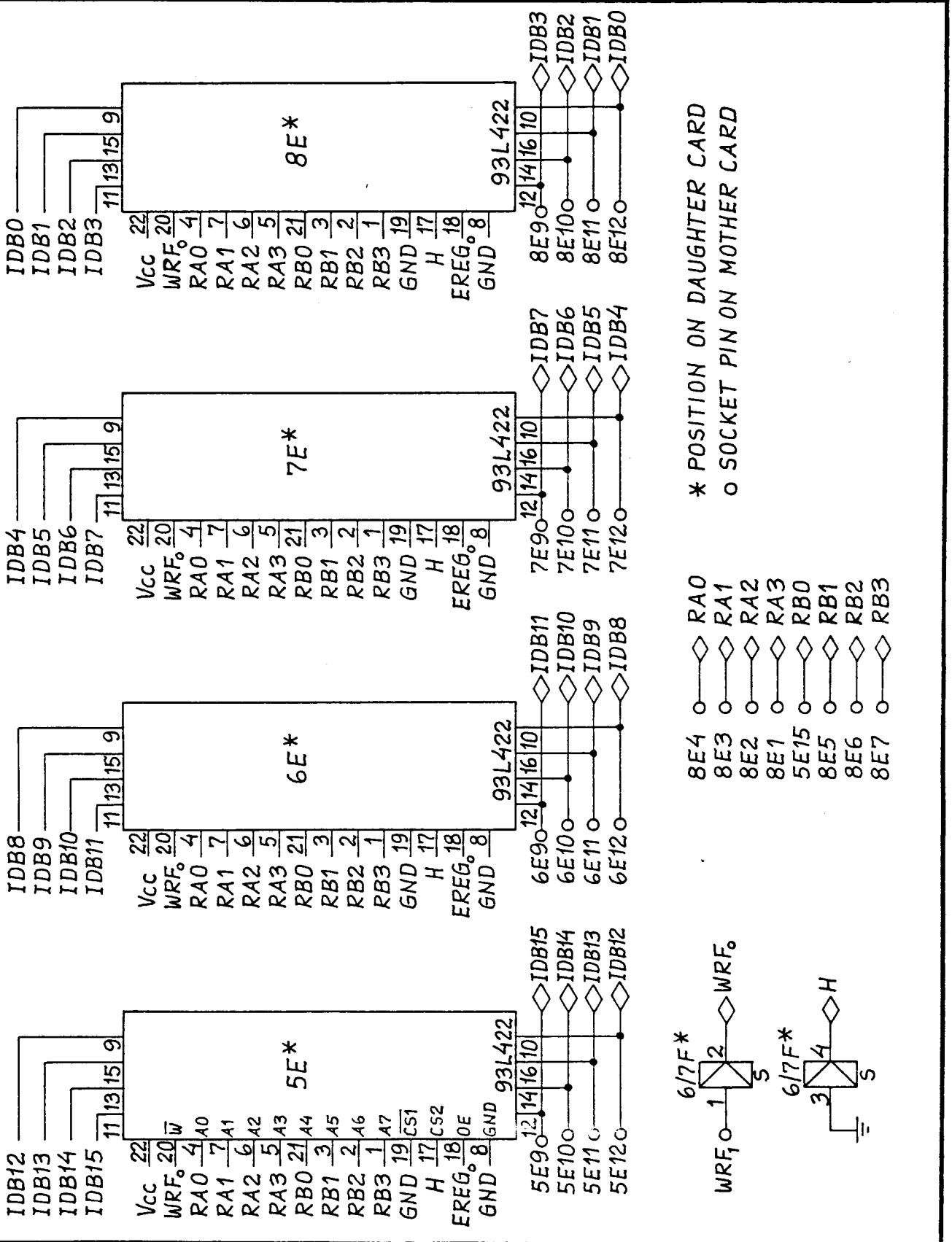

DRAWN BY Eml	Remarks 322762 is to a replacement for the four SN74S207 in positions 5,6,7&8E on N-100 CPU (322602)	Replacement for	Date
APPROVED BY IB		Replaced by	Date
DATE 27.1.79			

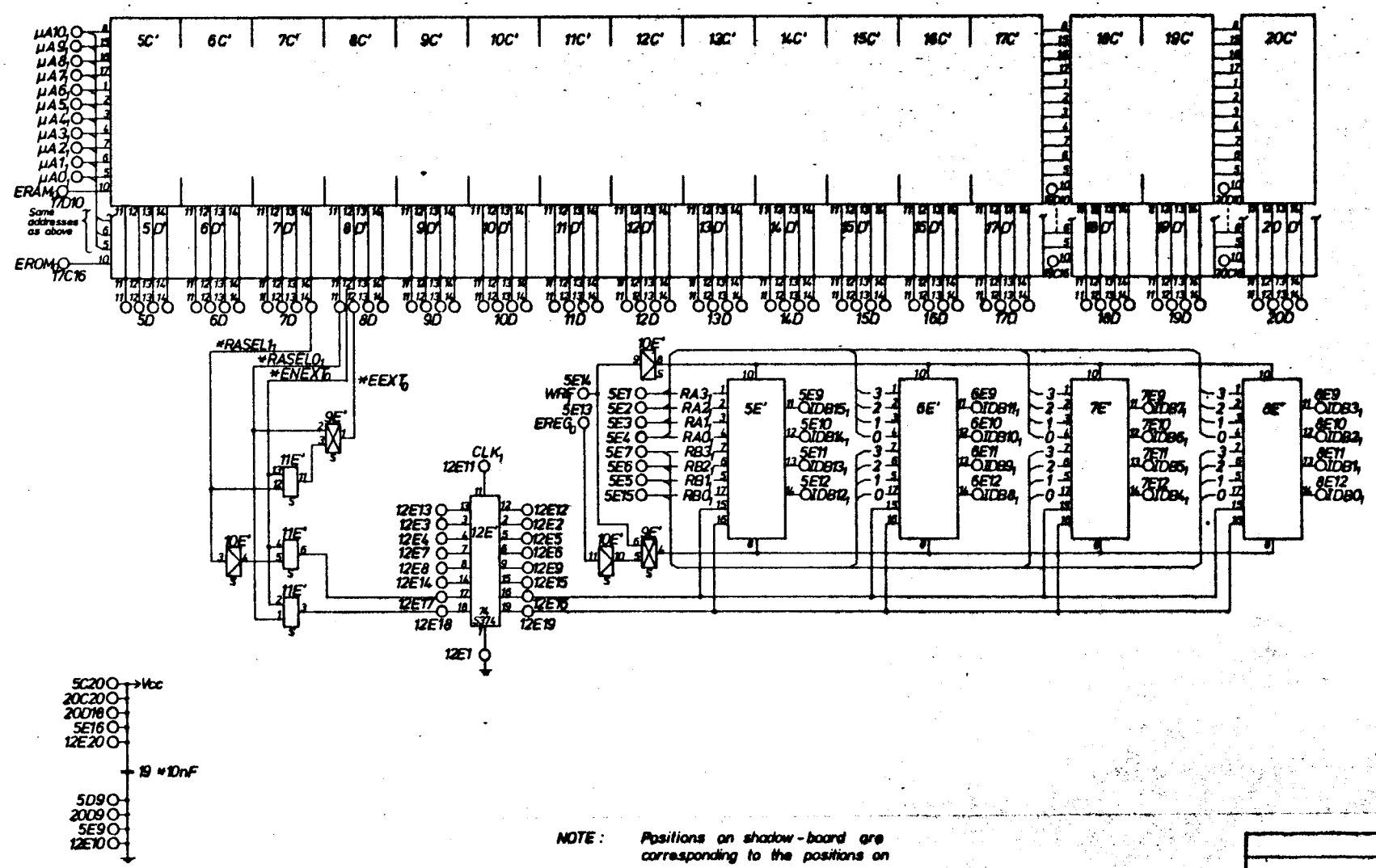

NOTE: Positions on shadow-board are corresponding to the positions on main board, but marked with a ' (ex. 5E')

	322790	C C
Corrected	Date	Sign.
4K PROM ADAPTER FOR 3002	1961	Drawn
NORSK DATA A.S Oslo, Norway		Replaced by

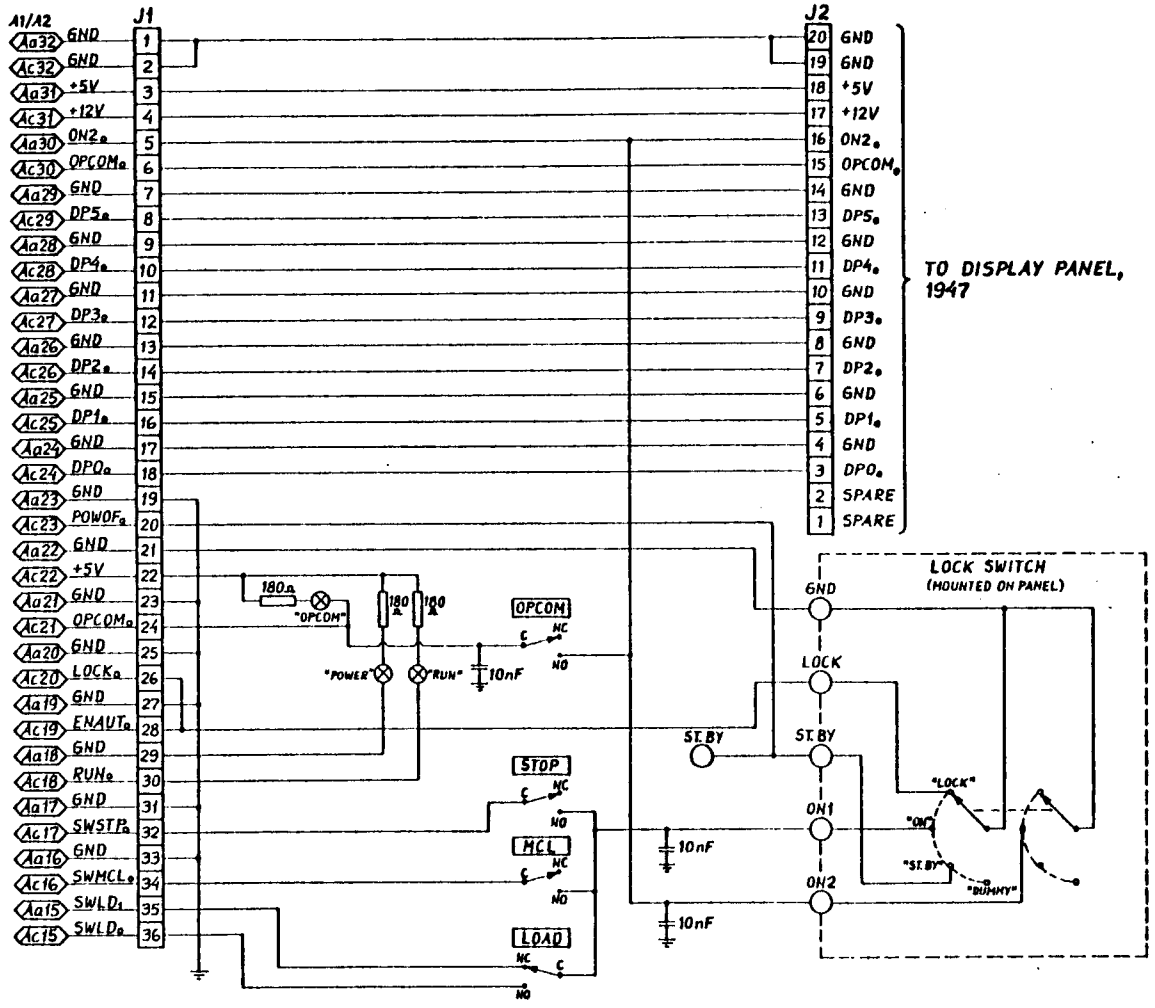

ID.NO. 322778	CARD PRINT B A	
CORRECTED ACCORDING TO ECO 100-62	14.12.79	BW
Corrected	Date	Sign
PANEL CONTROL N-100	Print. no 1964	Drawn 25.05.79 Comp. SEJ Page 1 of 1
	Replacement for 322690 LC	
NORSK DATA A.S Oslo, Norway	7B31	
	Replaced by	

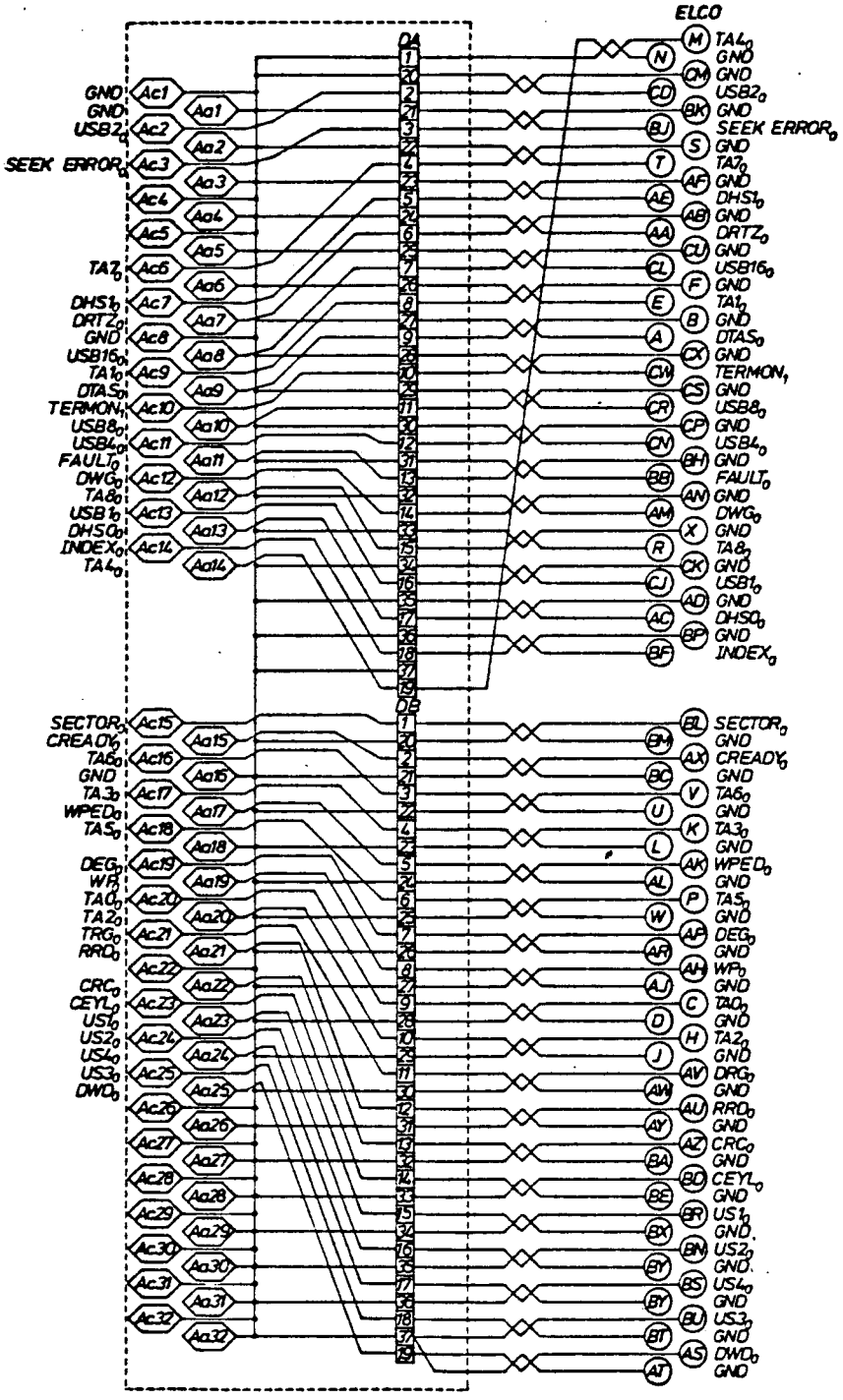

TD NO	CARD	PRINT
322792	B	B

Corrected | Date | Sign.

Print no	1965
Drawn	BW 28.8.79
Check	SEJ
Appr.	
Replacement for	
Replaced by	

10MB DISK CABLE ADAPTER

NORSK DATA A.S
Oslo, Norway

7832

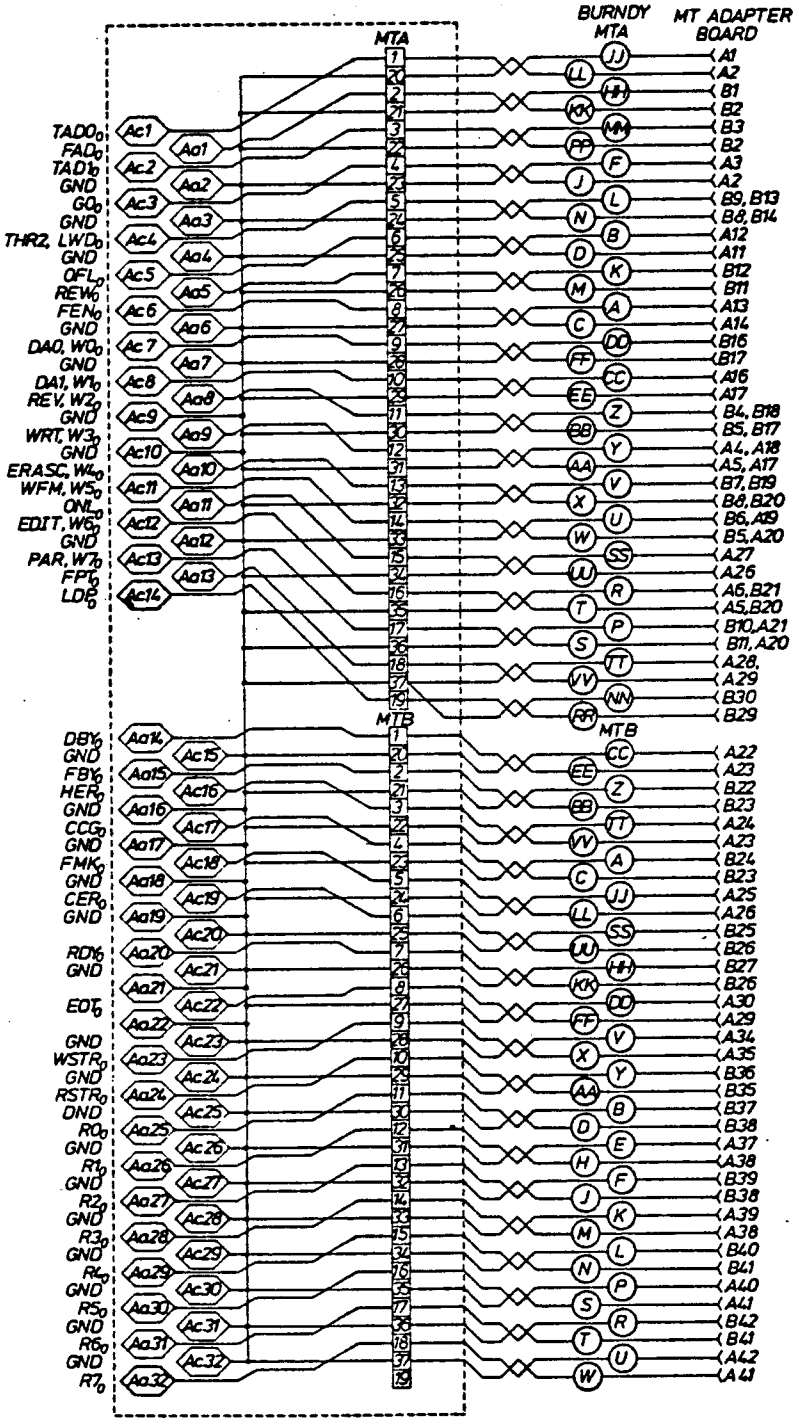

TD NO 322793	CARD PRINT B B		
Date	Sign	BM 29.8.79	
Corrected		Drawn	
		Checked SEJ	
		Approved	
PERTEC M-T CABLE ADAPTER		1966	
		Replaces drawing No.	7833
NORSK DATA A.S Oslo, Norway			Replaced by

NORSK DATA A.S Oslo, Norway	Title LH ADAPTER	ID.NO CARD PRINT 322795 A A

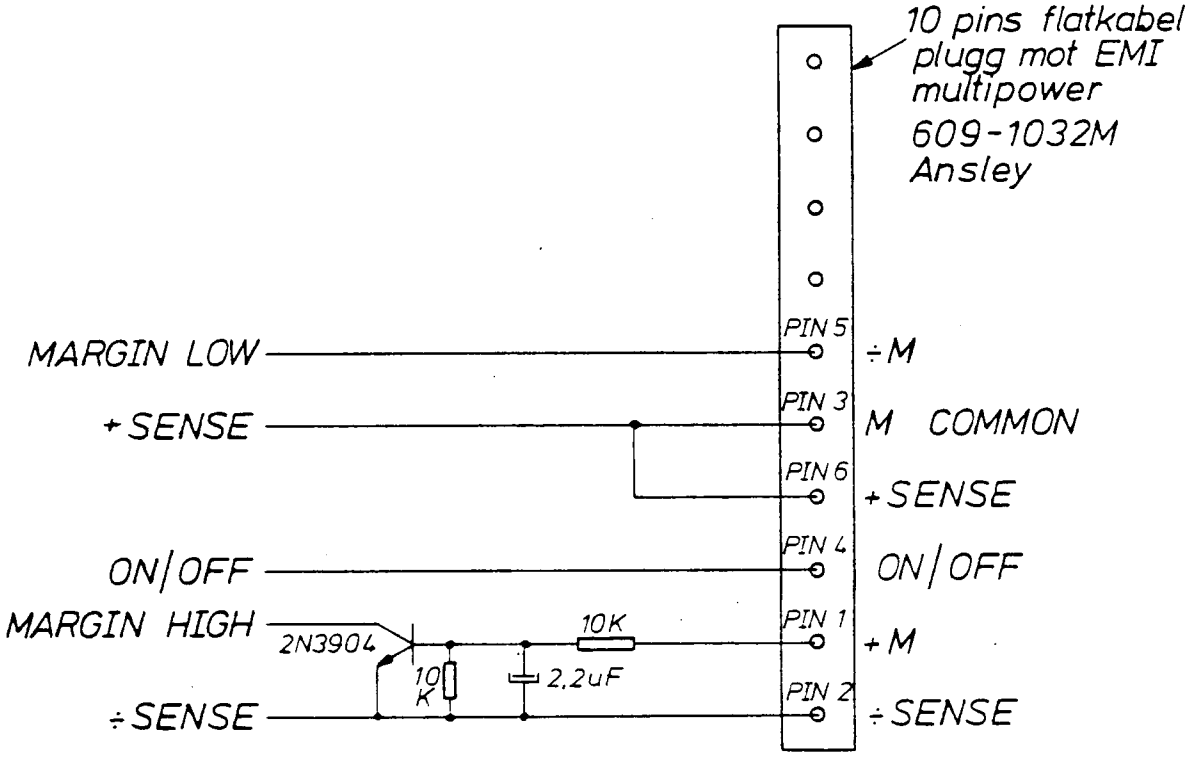

DRAWN BY BW APPROVED BY KA DATE 19.10.79.	Remarks PRINT 1968	Replacement for Date Replaced by Date

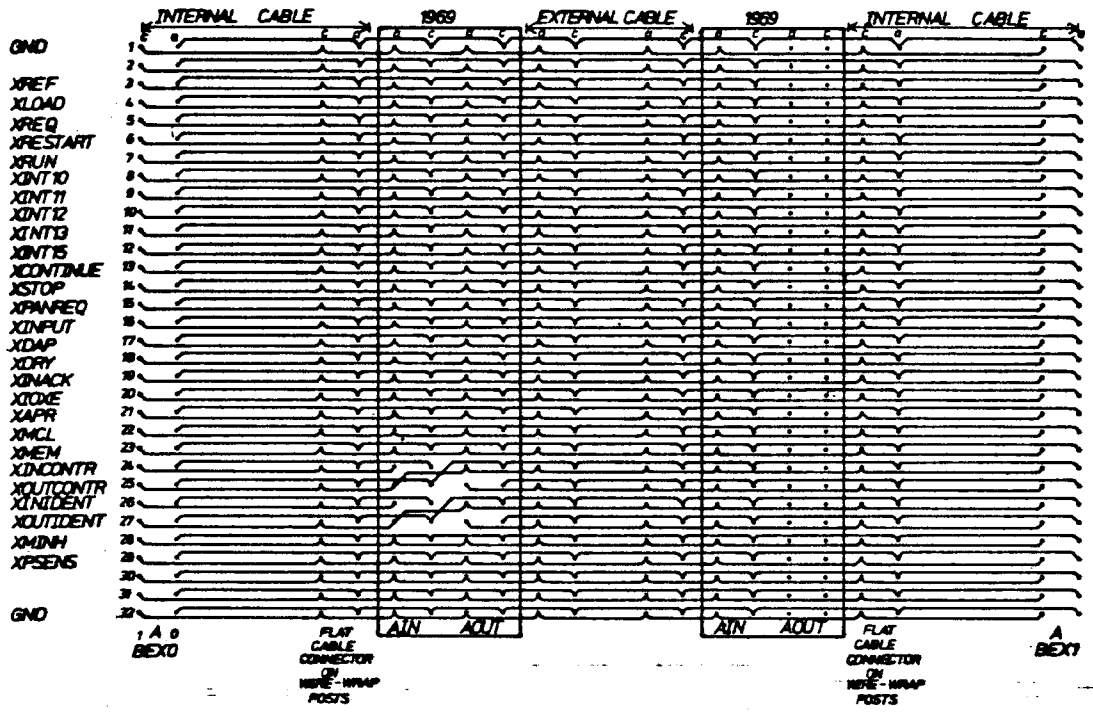

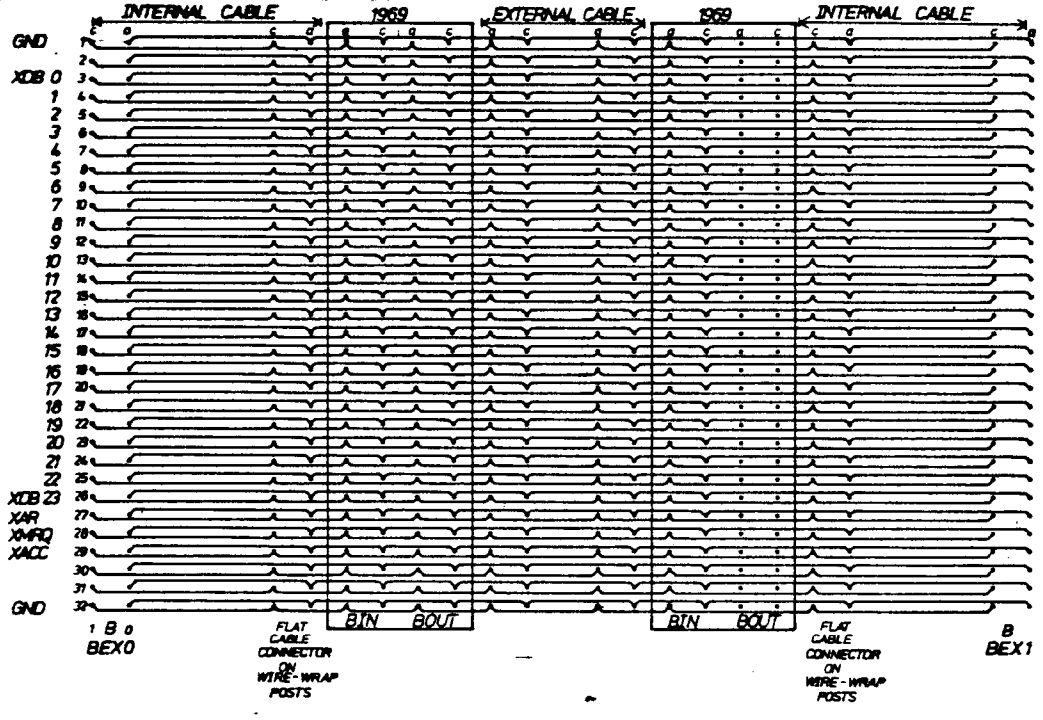

TOTAL	CARD FRONT
322776	A A
Date	Rep.
Print no / Scale 1969	Drawn AL 19.11.80
	Code BEJ
	Page 1 of 1
Corrected	Replacement for
CABLE DIAGRAM FOR BUS EXPANDER	
NORSK DATA A.S Oslo, Norway	Replaced by

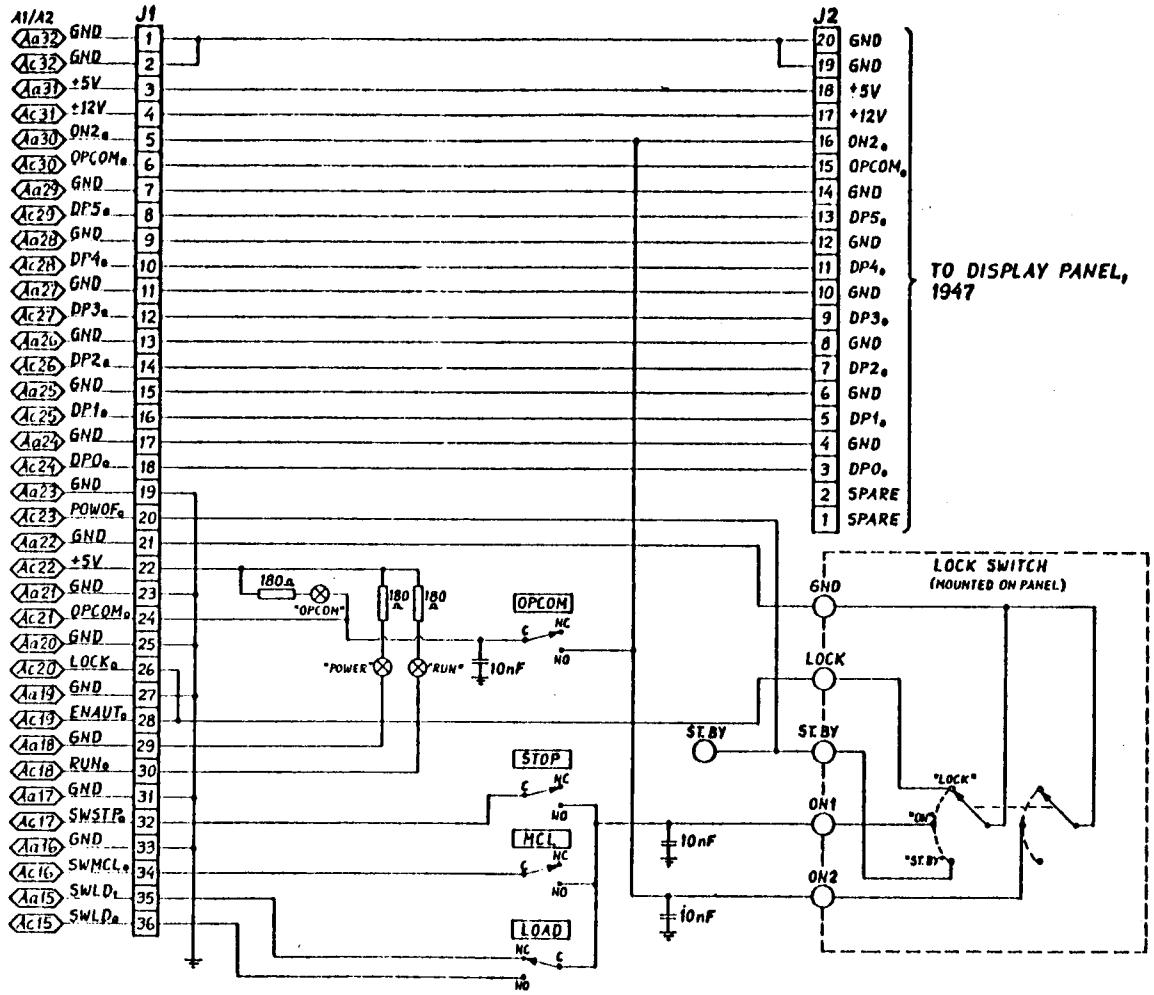

ID NO. 322693	CARD PRINT A A	
Checked	Date	Sign
PANEL CONTROL N-100	Printed on 1981	Drawn Gaal 02.07.81 Checked SEJ Page 1 of 1
	Replacement for 322778 BA	
NORSK DATA A.S Oslo, Norway	Replaced by	