BUS-SWITCH

# A/S NORSK DATA-ELEKTRONIKK

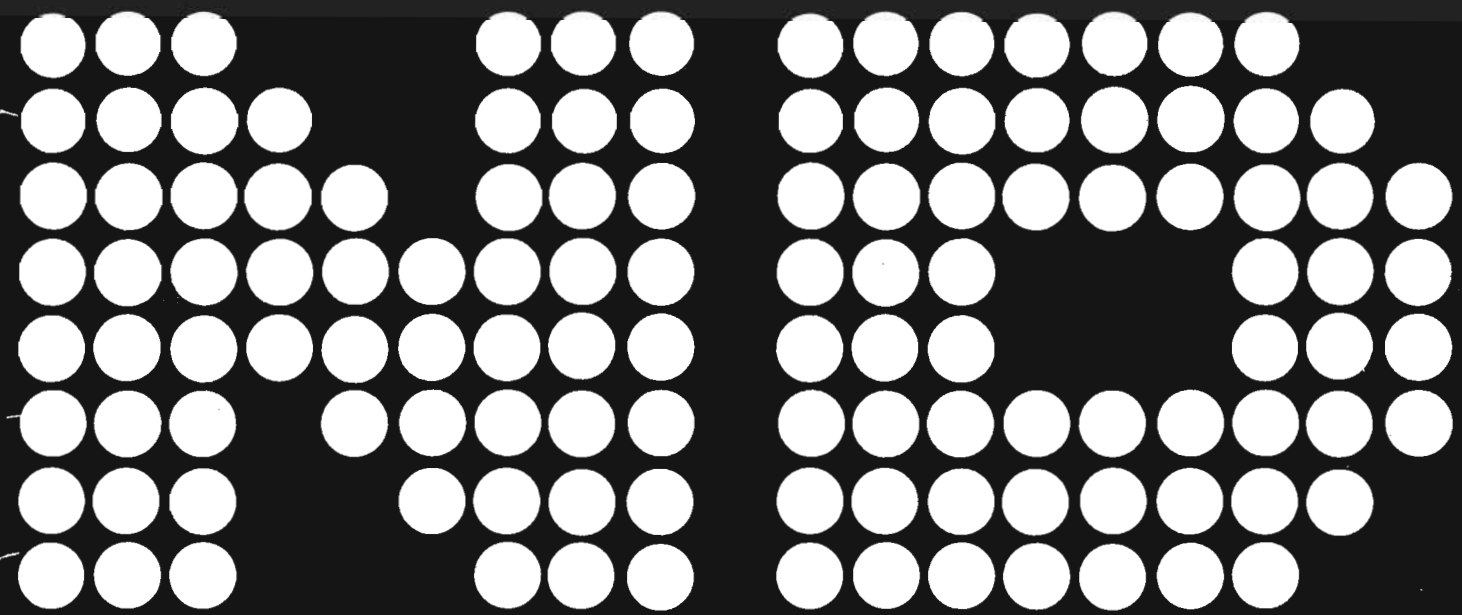

Scanned by Jorny Oddene for Sintran Data © 2010

Scanned by Jonny Oddene for Sintran Data © 2010

# BUS-SWITCH

+++

It is often useful to transfere the control of peripheral devices from one CPU to another. A bus switch is designed for this purpose.

A bus switch is shown shematic in the following figure.

Bus-Switch

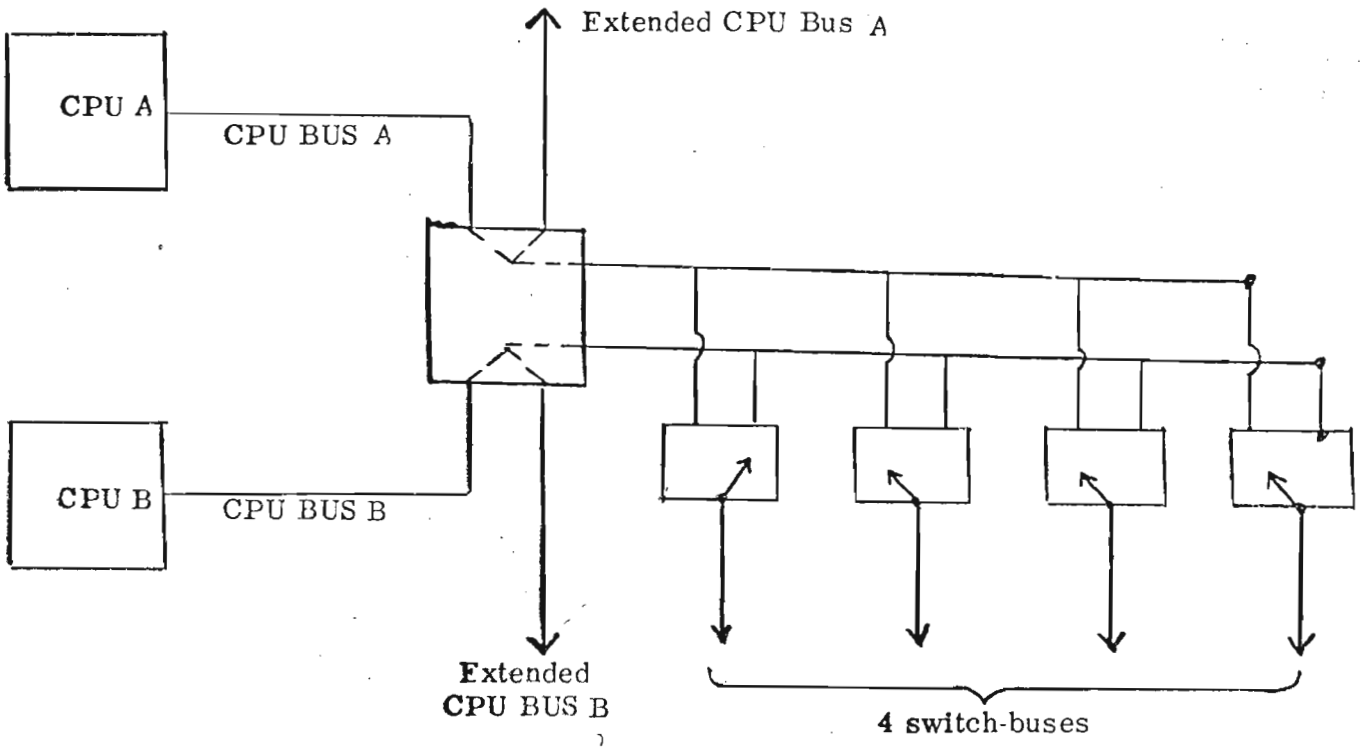


**CPU BUS**

Standard NORD-10 I/O bus from CPU or bus controller.

Extended CPU Bus

Standard NORD-10 I/O bus from the bus switch. This bus is a direct extention of a CPU bus and cannot be switched to the other CPU bus.

Switch-bus

Standard NORD-10 I/O bus from the bus-switch. It is possible to connect up to four switch-buses to one bus-switch. Each of the four buses may independently select one of the two CPU buses as source bus. The selection of source bus is controlled by an external signal, select signal. The select signal is usually given by a toggle-switch.



Scanned by Jonny Oddene for Sintran Data © 2010

CARD POSITIONS

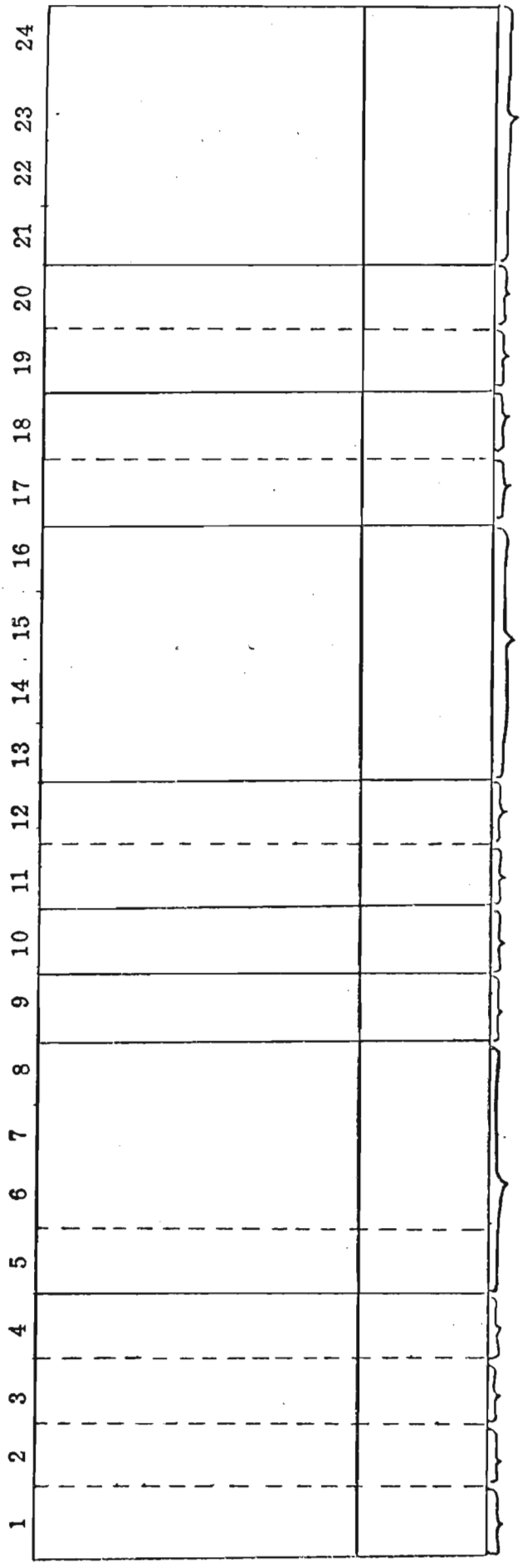


Card positions for data, one for each switch-bus.

Data CPU B (extended).

Data CPU B (IN)

Data CPU A (extended).

Data CPU A (IN)

Card positions for control, one for each switch bus.

Control CPU B (extended)

Control CPU B (in)

Control CPU A (extended)

Control CPU A (in)

Card positions for address, one for each switch bus.

Address CPU B(extended)

Address CPU B(in)

Address CPU A(extended)

Address CPU A(in)

5/6/75/JH/bp

Scanned by Jonny Oddene for Sintran Data © 2010

# BUS SWITCH

A : Address cable
C : Control cable
D : Data cable
P.P.: Plug position, no card

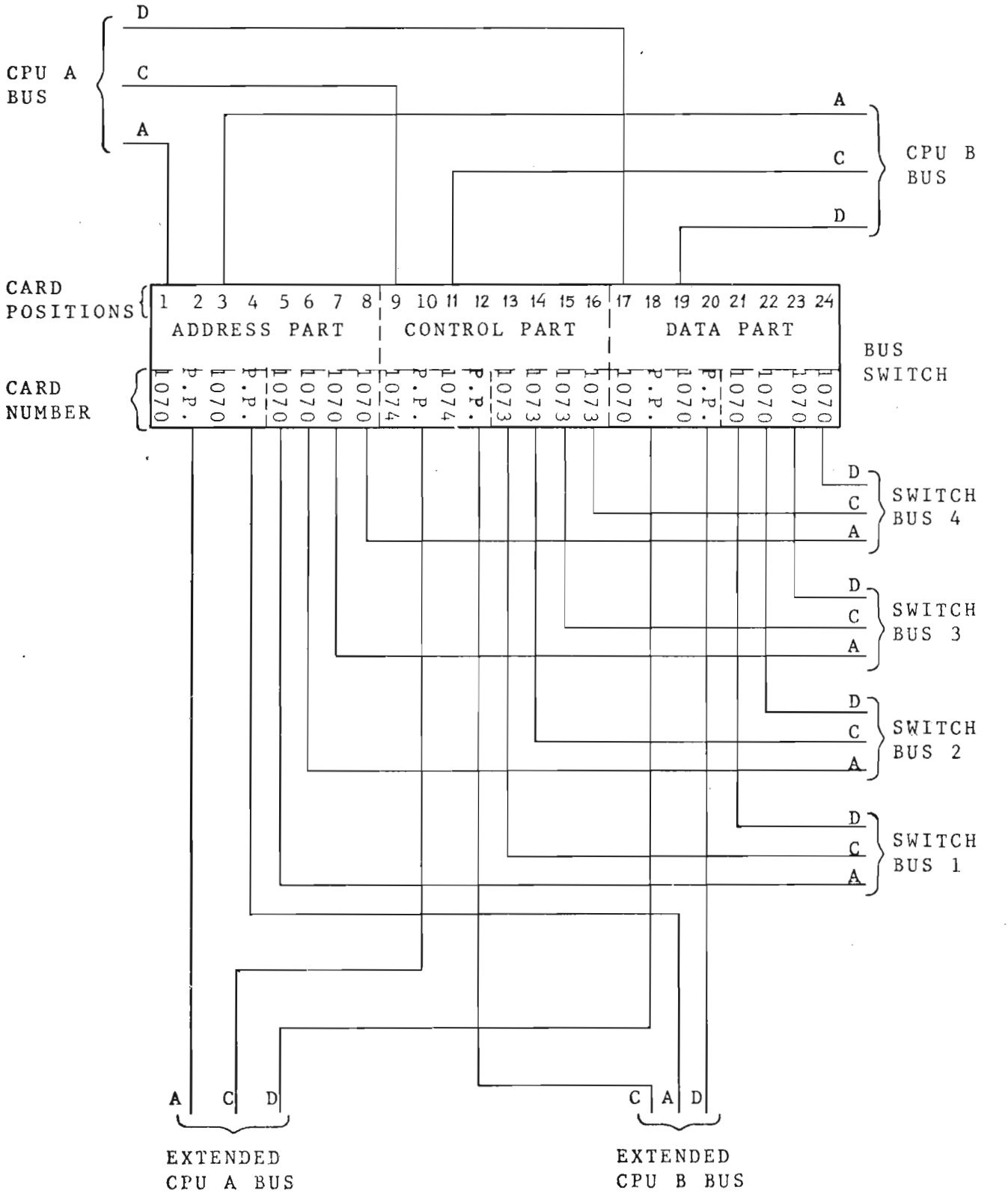


5/6/75/JH/eml

Scanned by Jonny Oddene for Sintran Data © 2010

# DATA AND ADDRESS PATHS IN BUS SWITCH

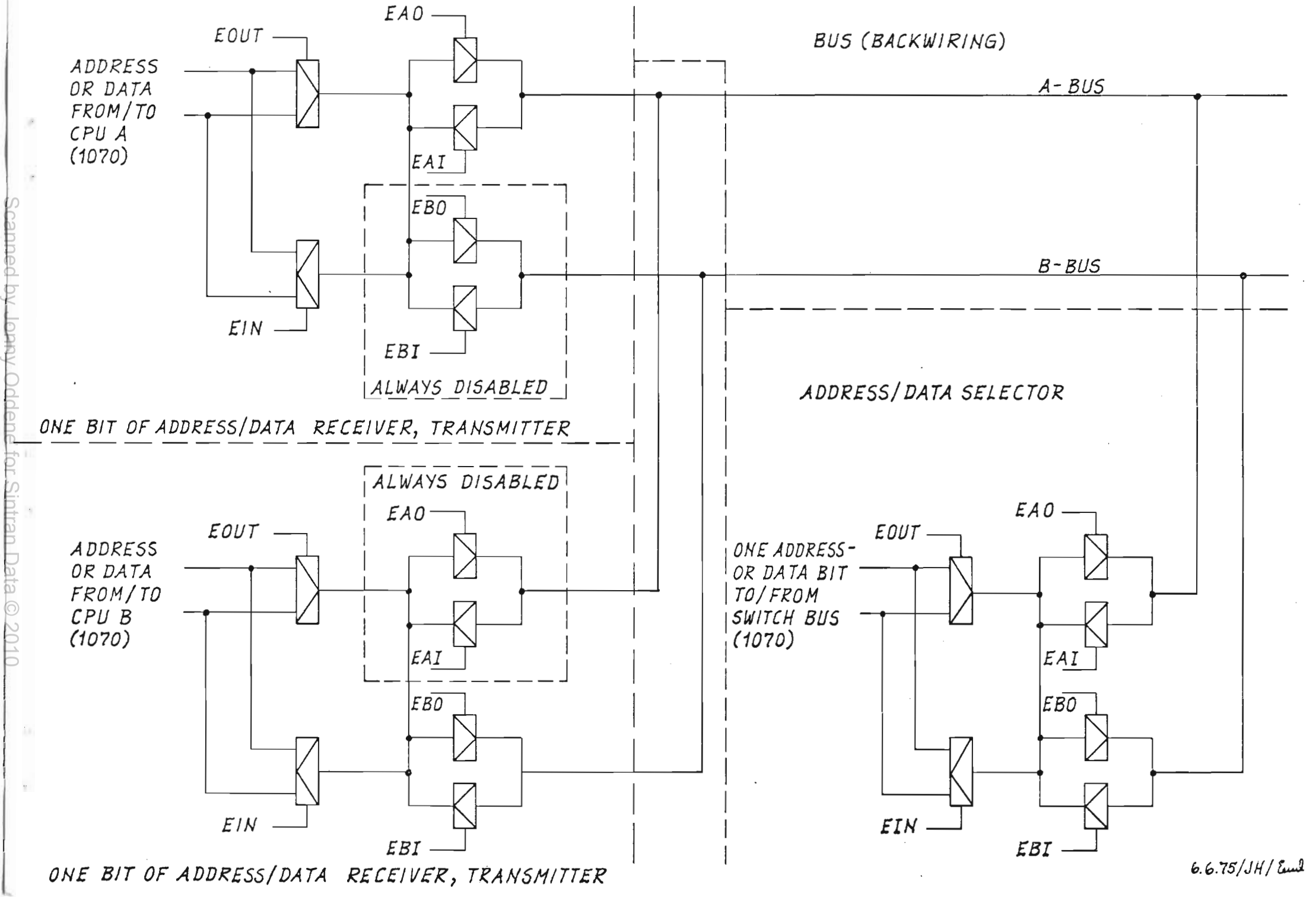


6.6.75/JH/Emd

Scanned by Jonny Oddene for Sintran Data © 2010

BUS SWITCH CONTROL SIGNALS

| | |
|---|---|
| IN: | Input signal, received on 1073 from device controller. |
| FAD10: | Add address bit 10 to IOX address, decoded from switch on 1073 card. Decoding is described on the 1073 drawing. |
| FD8: | Add bit 8 to ident code. Generated on 1073. |
| LOWSEL: | External signal (from toggle switch) to select bus from CPU A or B. When this signal is true, CPU-A is selected. |

Address and data enabling signals are generated from the two signals IN and LOWSEL.

The enabling signal generated and used on Data and Address bus selector (1070):

Used as CPU address/data receiver, transmitter:

| | |
|---|---|
| EIN: | Enable address or data to CPU (INPUT) |
| EOUT: | Enable address or data from CPU (OUTPUT) |
| EAO: | Enables address/data to A-BUS |
| EAI (X-Y): | Enables address/data from A-BUS |
| EBO (X-Y): | Enables address/data to B-BUS |
| ABI (X-Y): | Enables address/data from B-BUS |

Used as address/data selector:

| | |
|---|---|
| EAO (X-Y): | Select address/data from A-BUS |
| EAI (X-Y): | Enables address/data on A-BUS |
| EBO (X-Y): | Select address/data from B-BUS |
| EBI (X-Y): | Enables address/data on B-BUS |
| EOUT: | Enables selected address/data out |
| EIN: | Enables selected address/data in |

9/6/75/JH/bp

Scanned by Jonny Oddene for Sintran Data © 2010

# CONTROL SIGNALS TO CPU

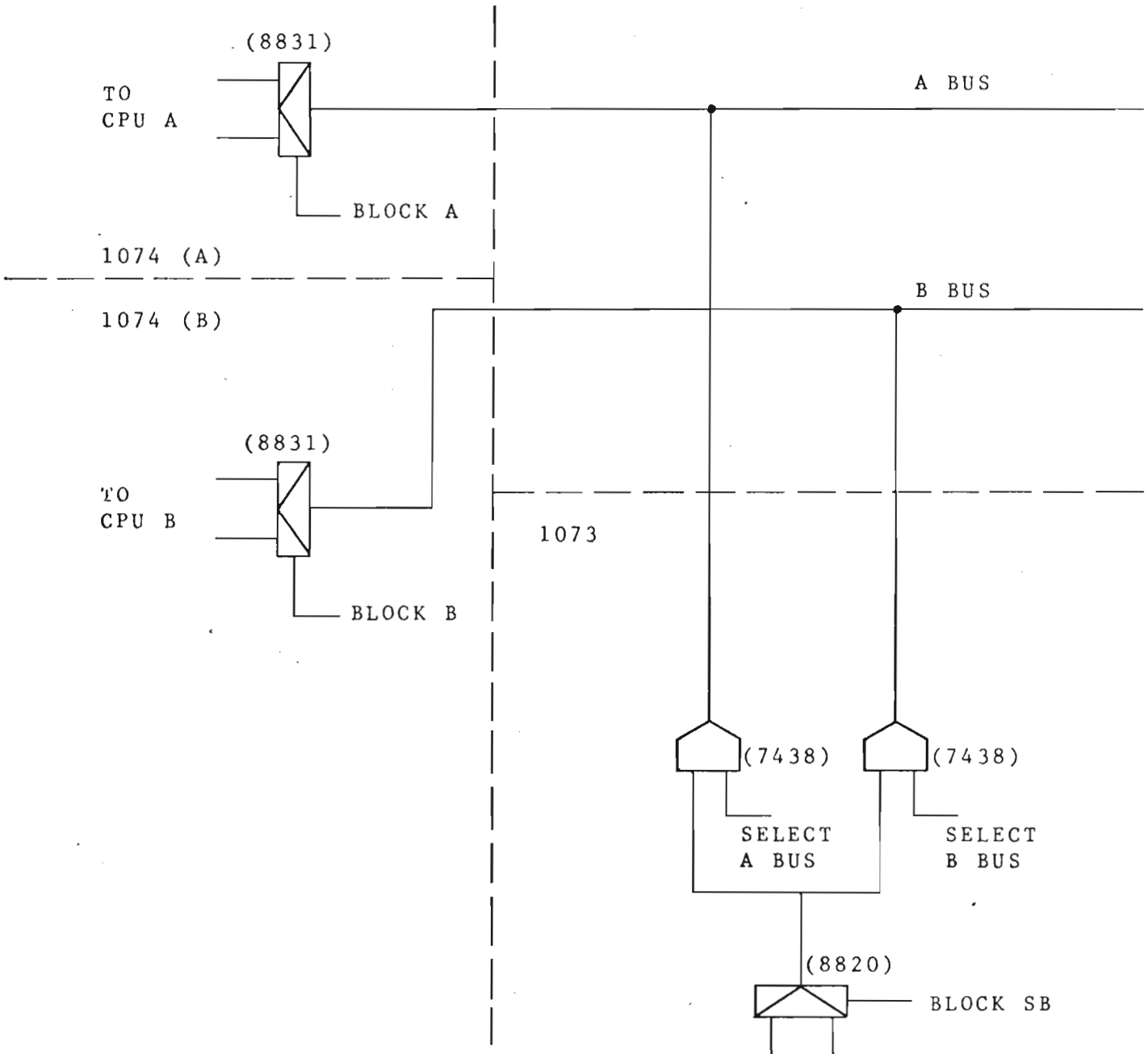


CONTROL SIGNALS TO CPU USING THIS GATING:

| | |
|---|---|
| Input | (BINPUT) |
| Connect | (BCON) |
| Request | (BREQ) |
| Interrupt level 15 | (BINT 15) |
| " " " 13 | (BINT 13) |
| " " " 12 | (BINT 12) |
| " " " 11 | (BINT 11) |
| " " " 10 | (BINT 10) |

6/6/75/JH/eml

Scanned by Jonny Oddene for Sintran Data © 2010

CONTROL SIGNALS FROM CPU

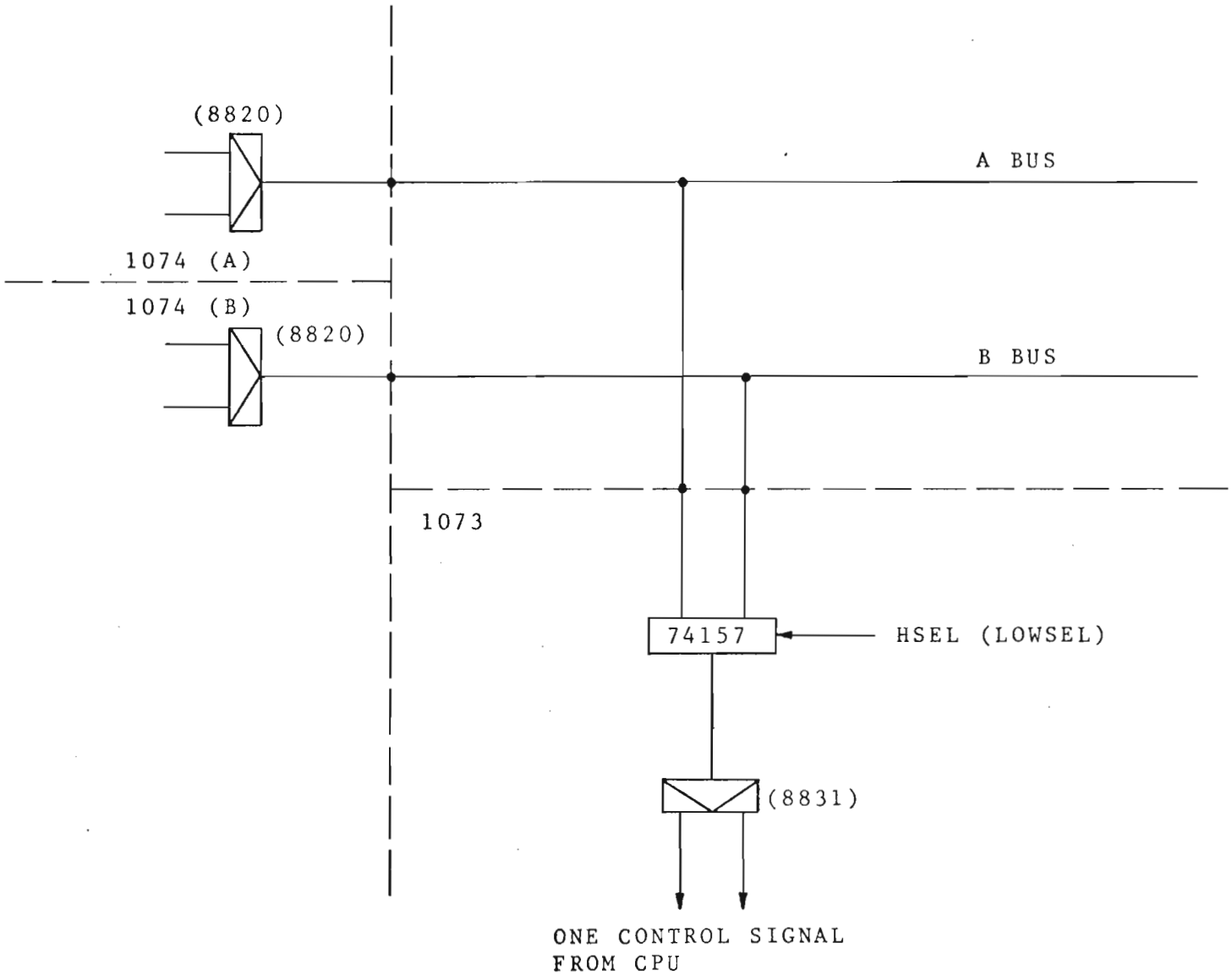


CONTROL SIGNALS FROM CPU USING THIS GATING:

IOX (Special gating on 1073)

MC Master Clear

DRX Data Ready

6/6/75/JH/eml

Scanned by Jonny Oddene for Sintran Data © 2010

# IDENT - BRANCHING

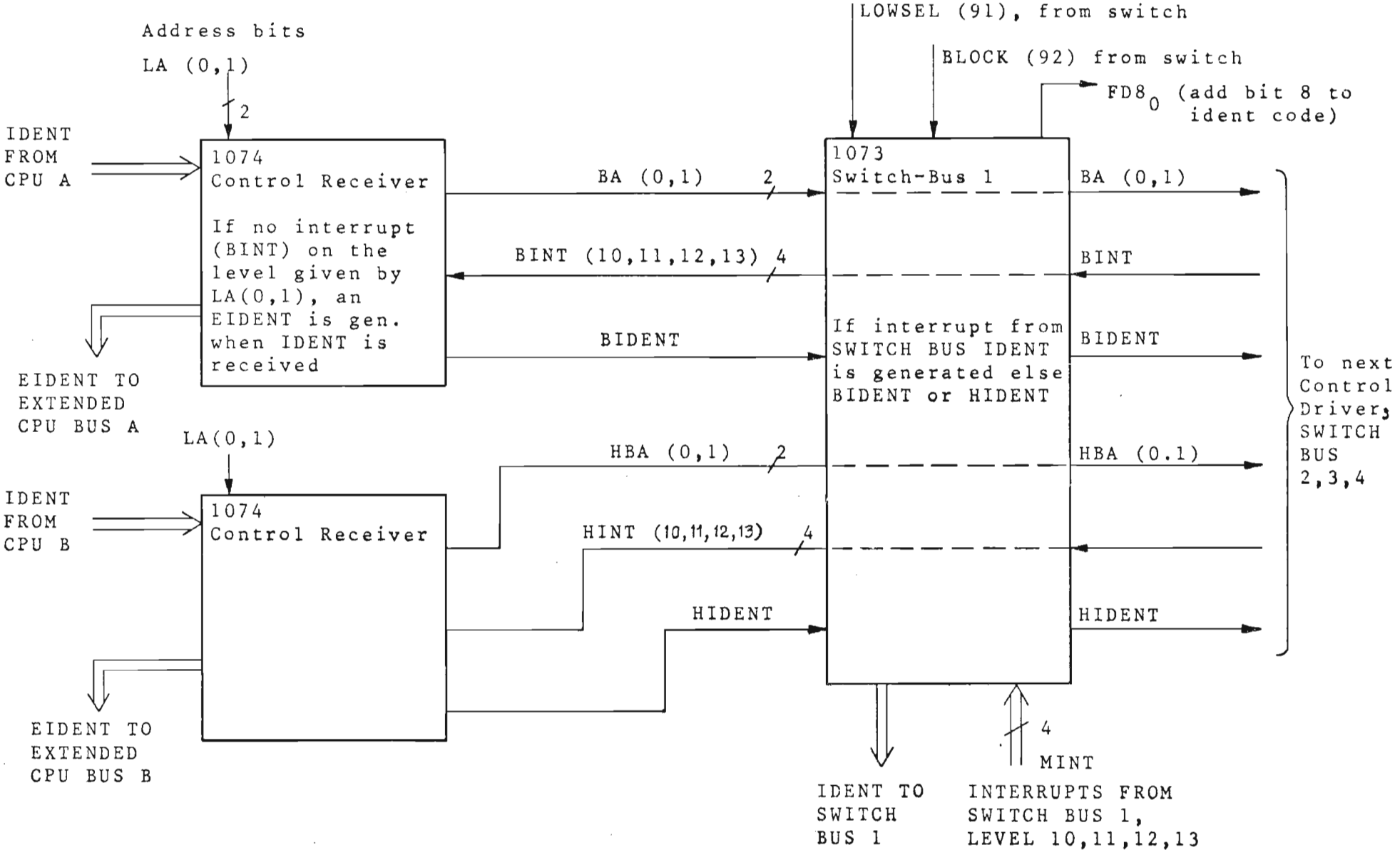


A SWITCH BUS has higher priority than the EXTENDED CPU BUS.
SWITCH BUS 1 has the highest priority of the SWITCH BUSES.

⟹ Differential driven lines

11.6.75/JH/Emd

Scanned by Jonny Oddene for Sintran Data © 2010

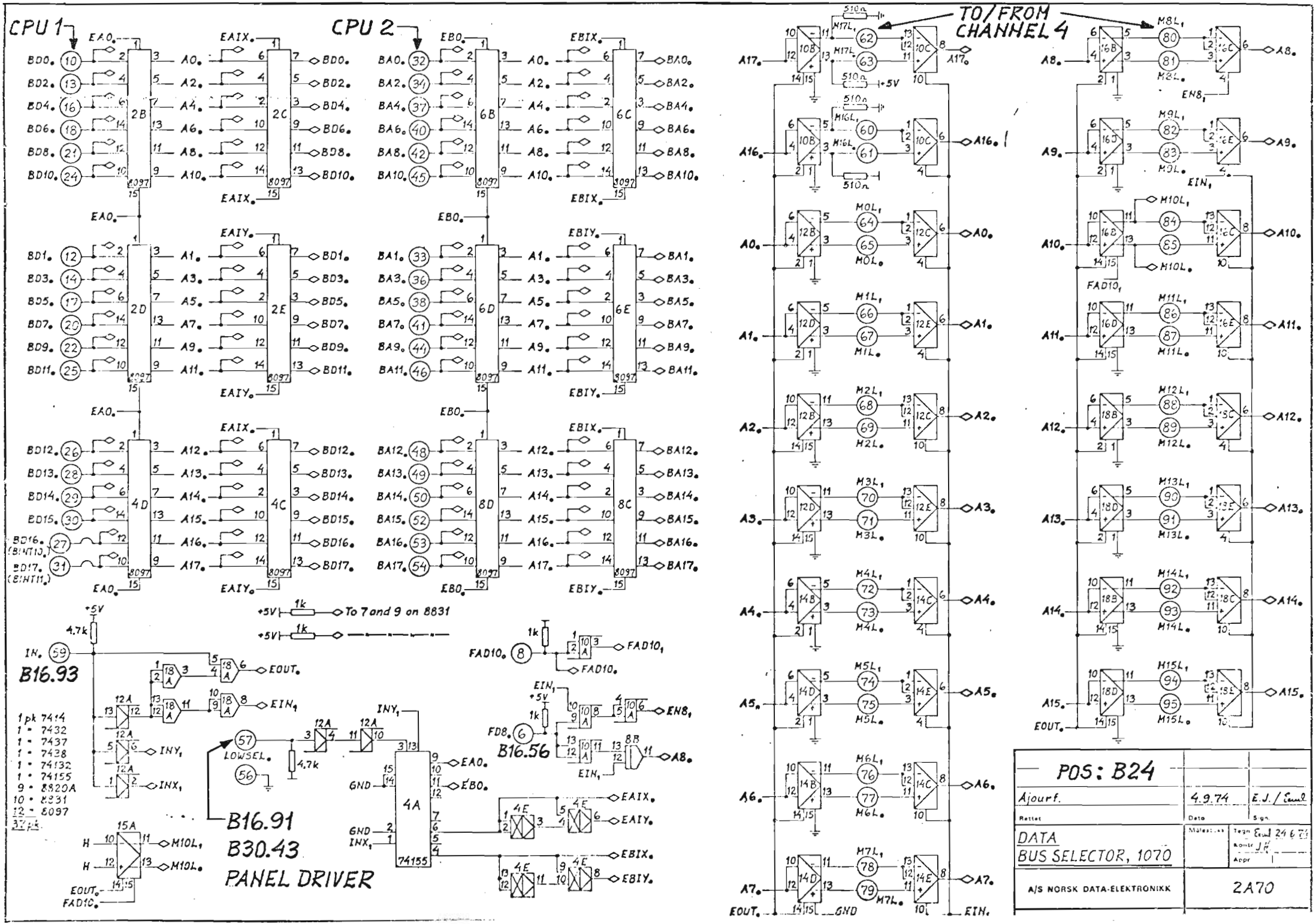


Scanned by Jonny Oddene for Sintran Data © 2010

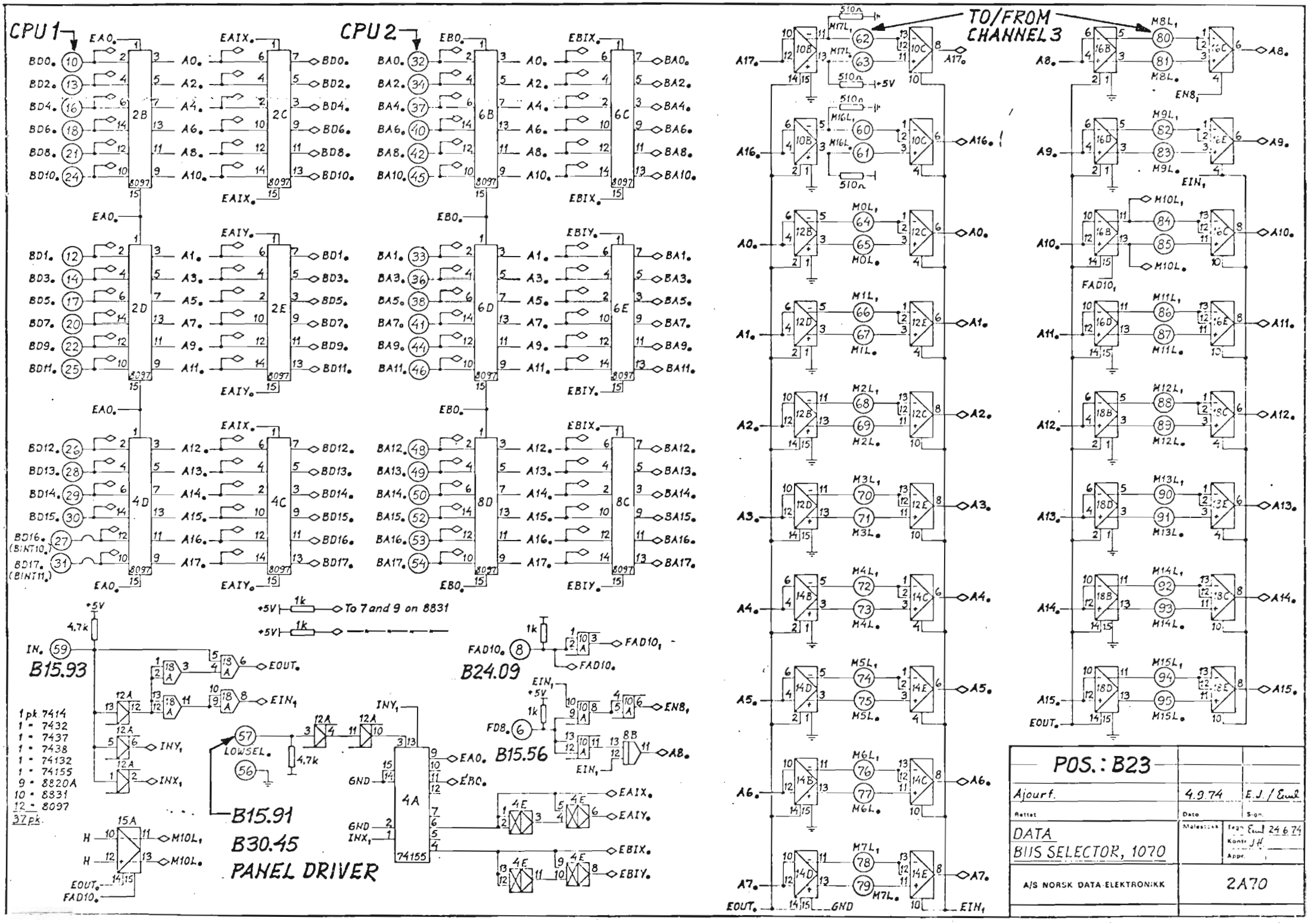


Scanned by Jenny Oddene for Sintran Data © 2010

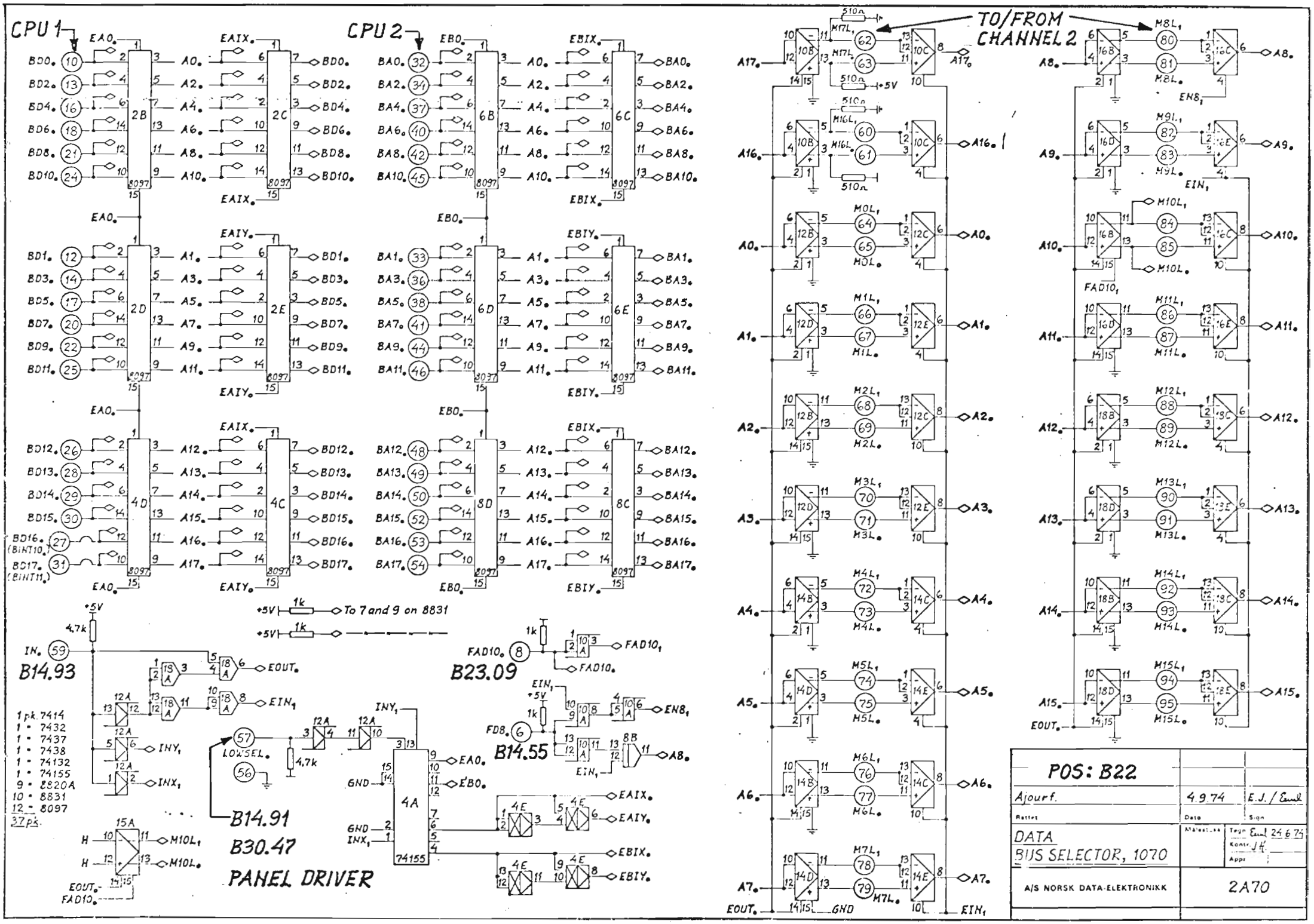


Scanned by Jonny Oddene for Sintran Data © 2010

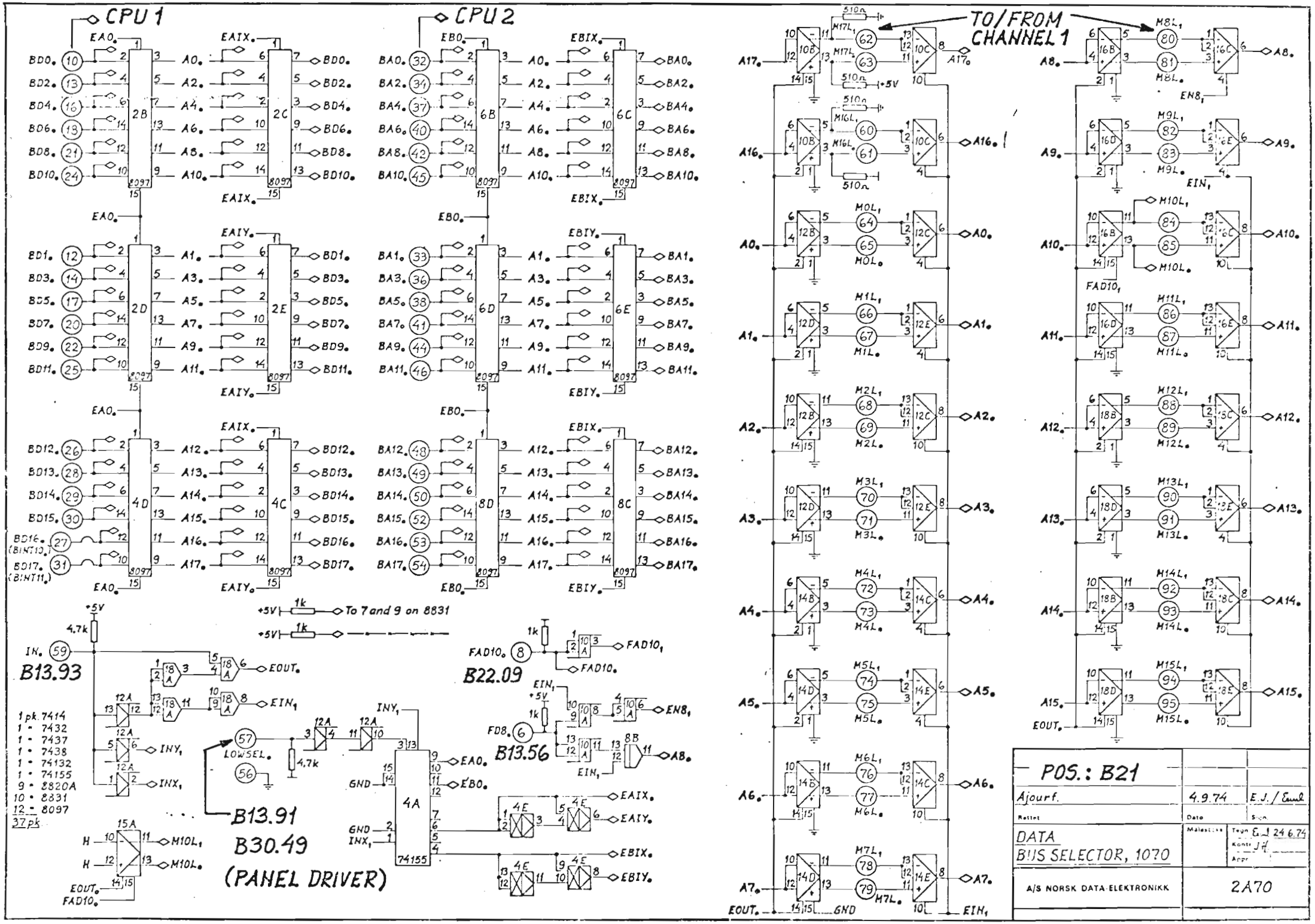


Scanned by Jonny Oddene for Sintran Data © 2010

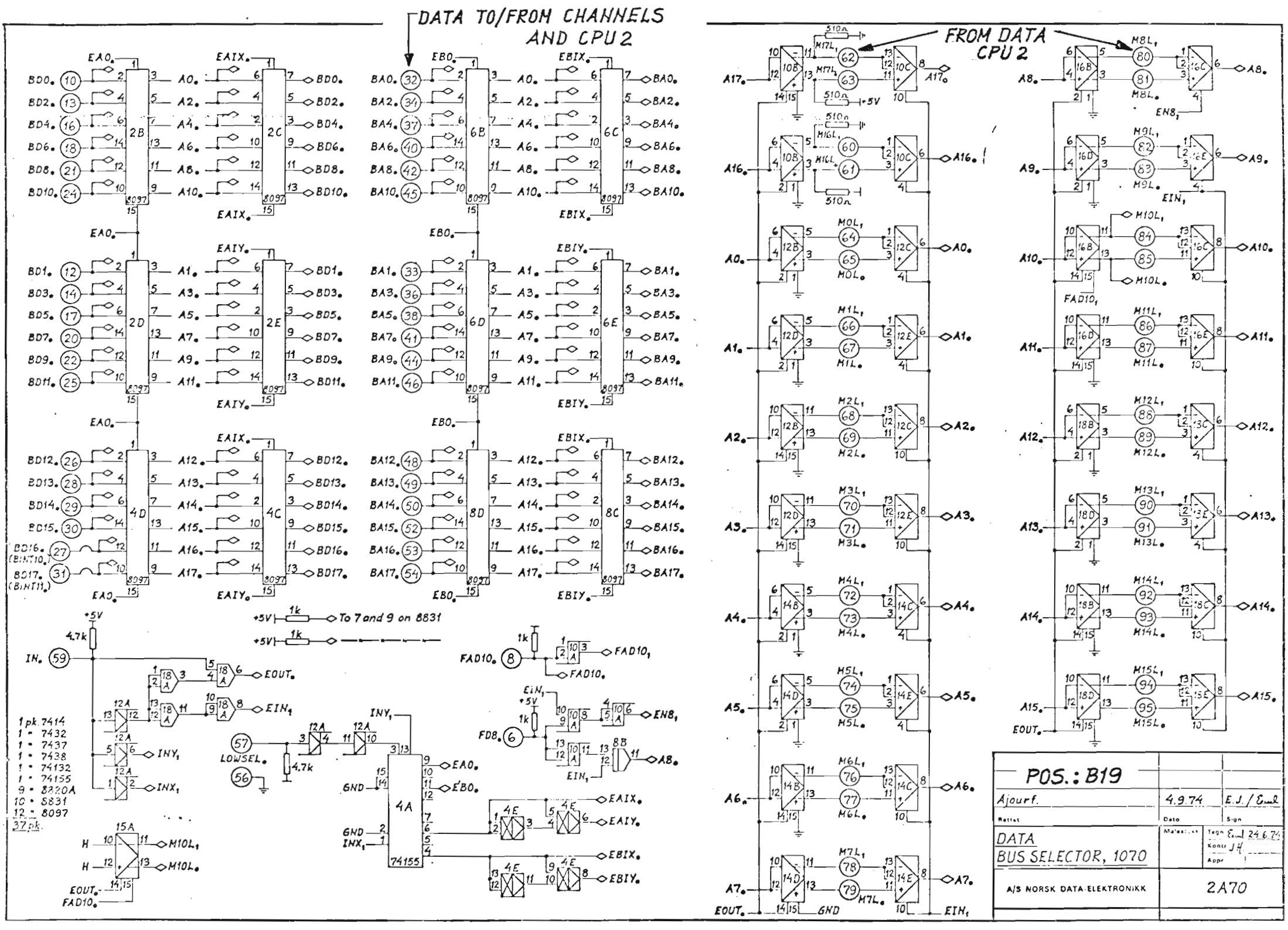


Scanned by Jonny Oddene for Sintran Data © 2010

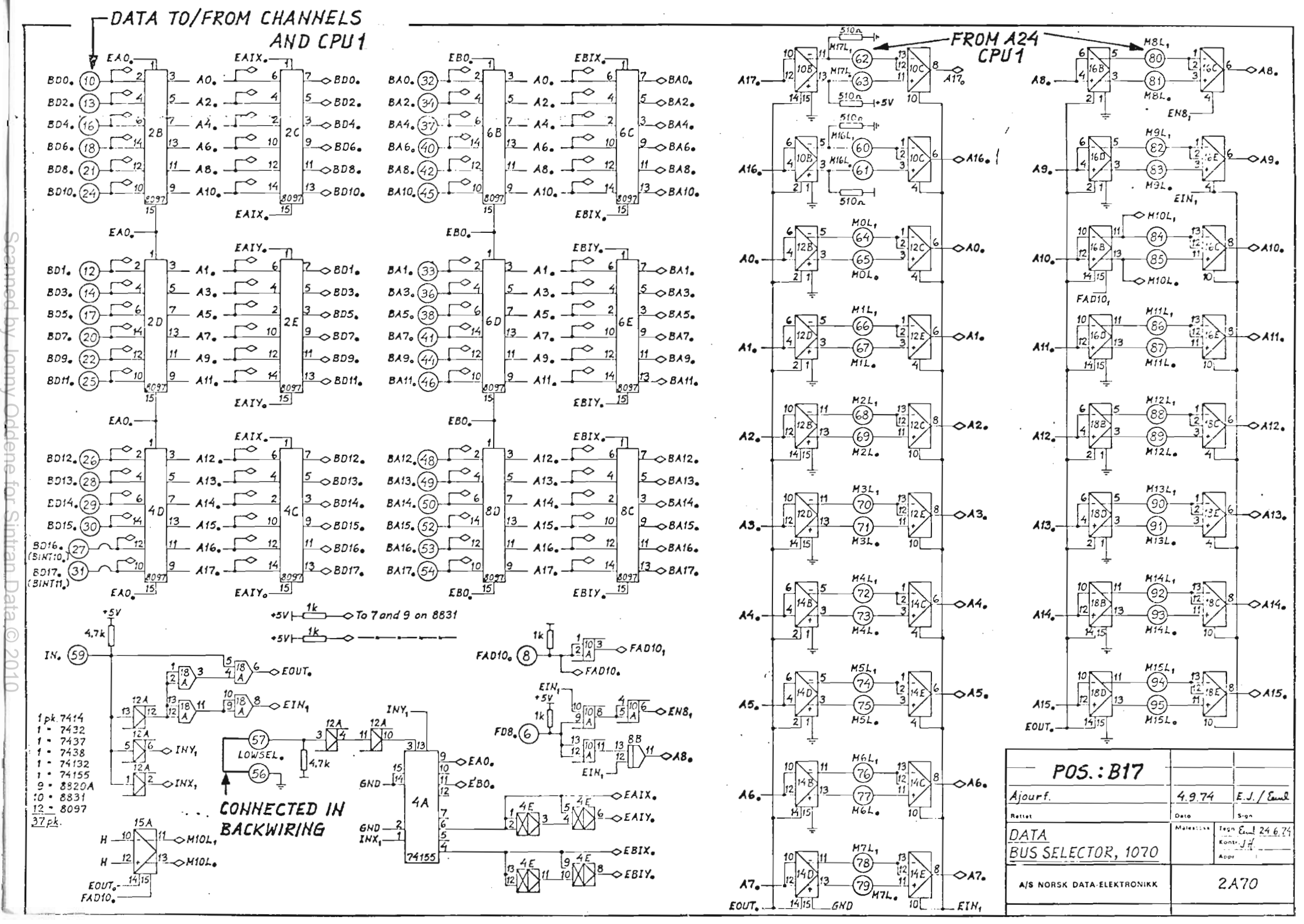


Scanned by Jonny Oddene for Sintran Data © 2010

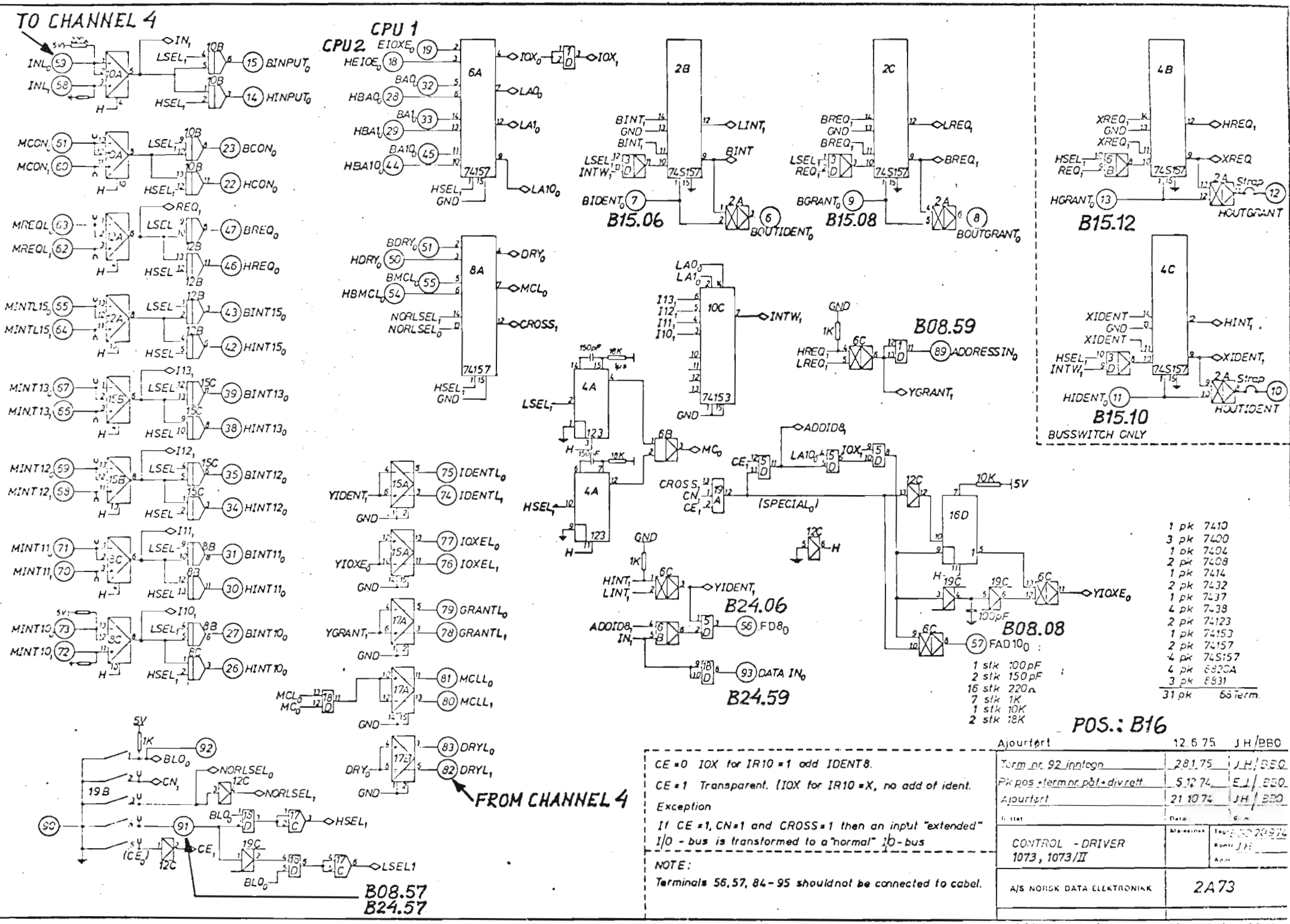


Scanned by Jonny Oddene for Sintran Data © 2010

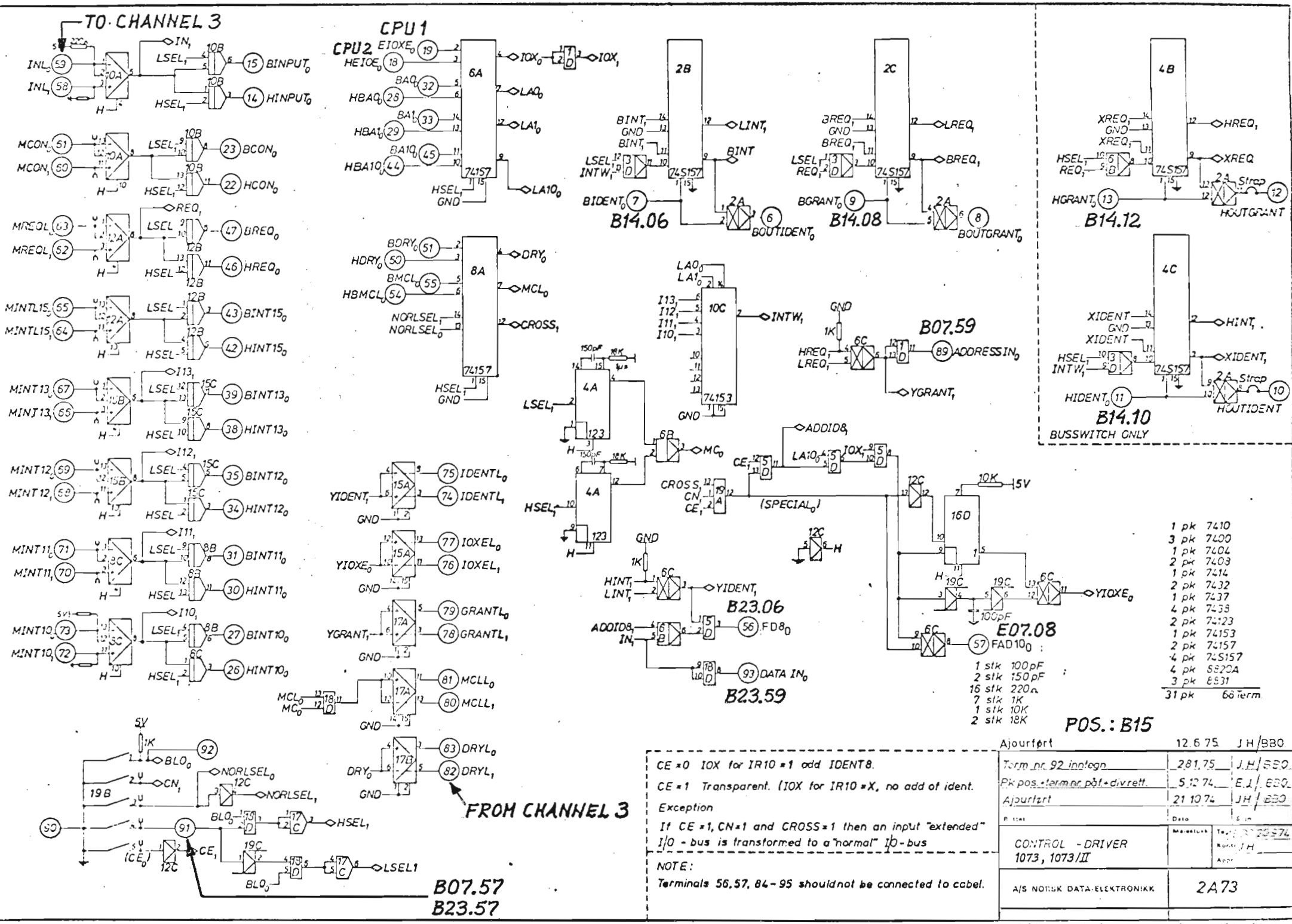


Scanned by Jonny Oddene for Sintran Data © 2010

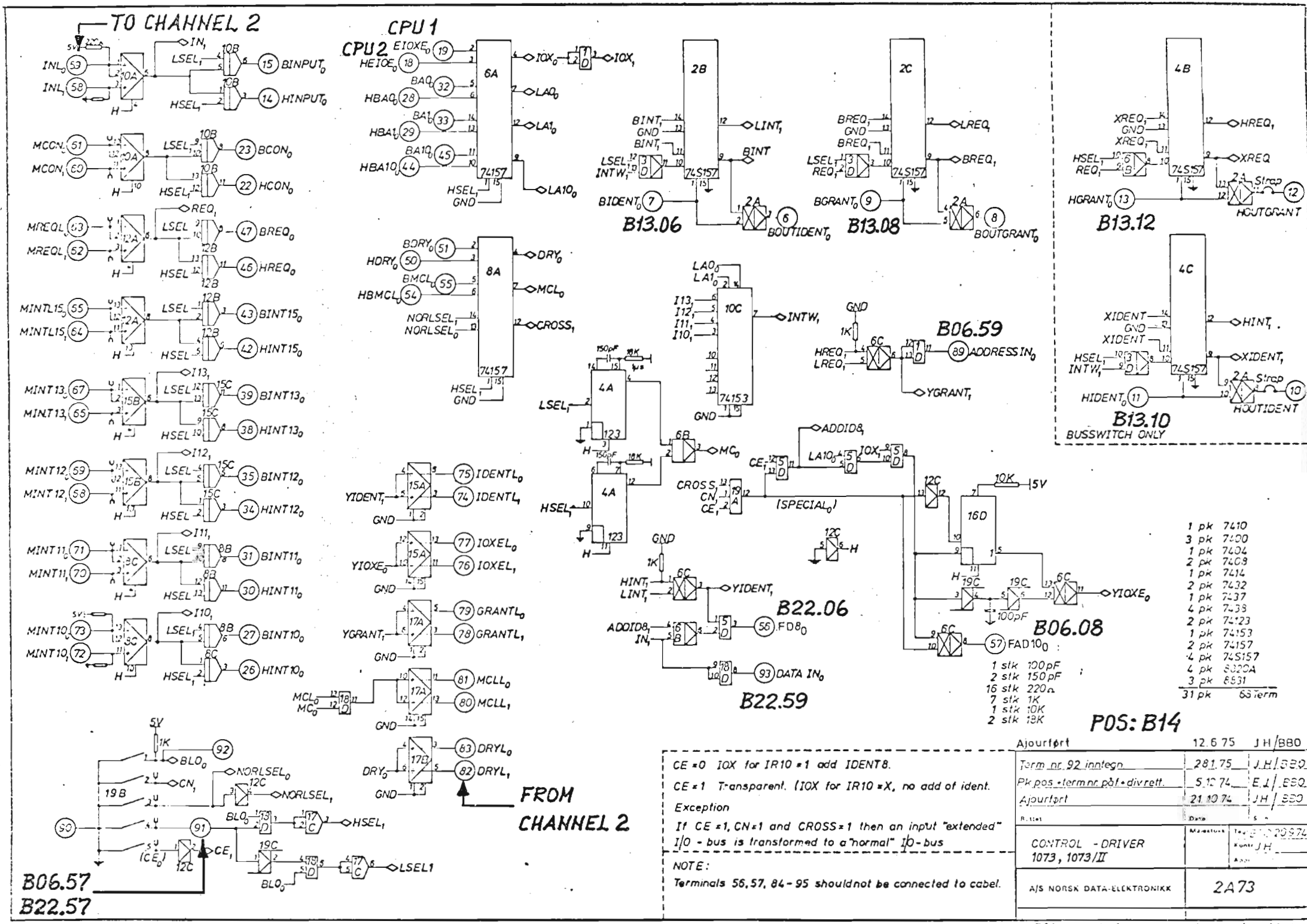


Scanned by Jonny Oddene for Sintran Data © 2010

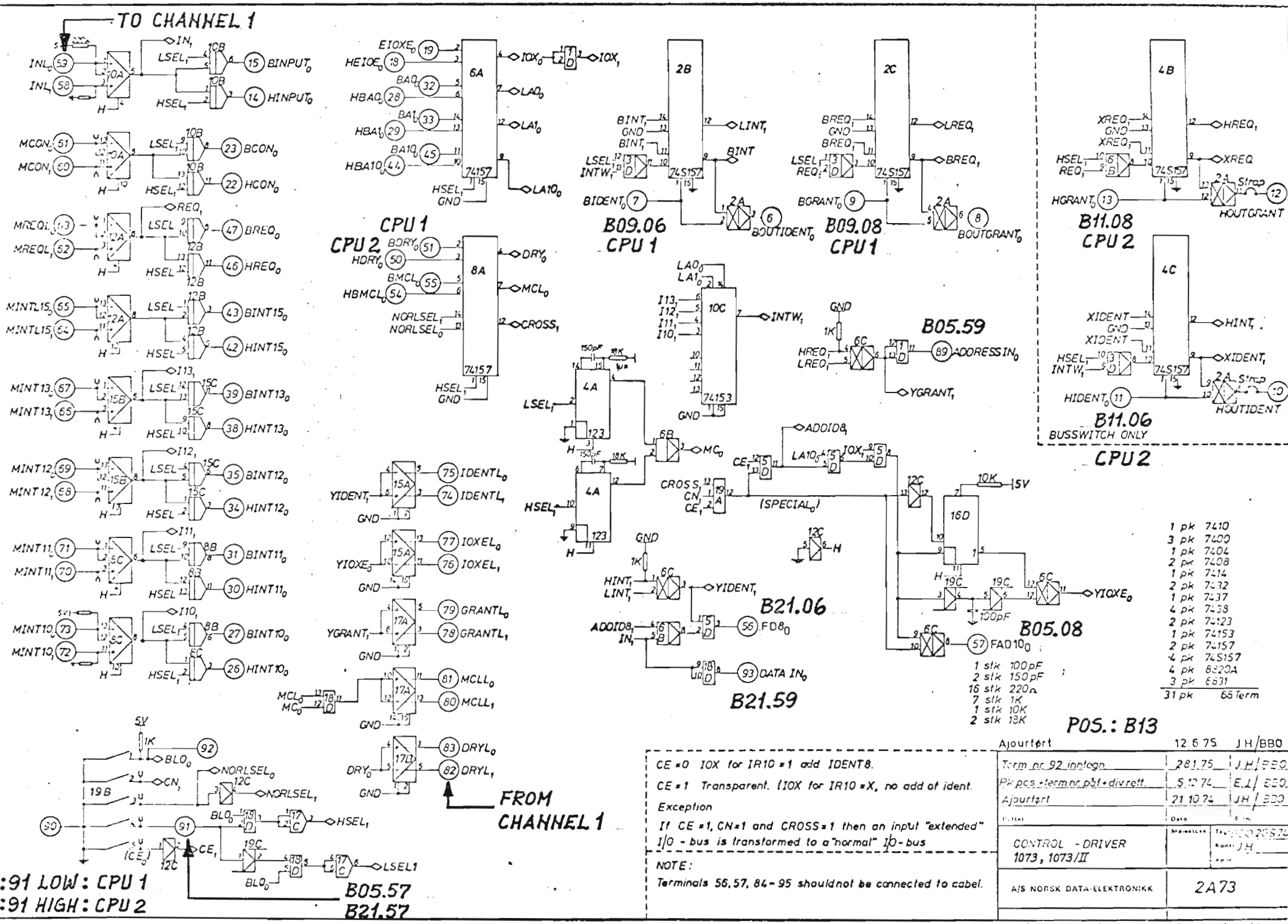


Scanned by Jonny Oddene for Sintran Data © 2010

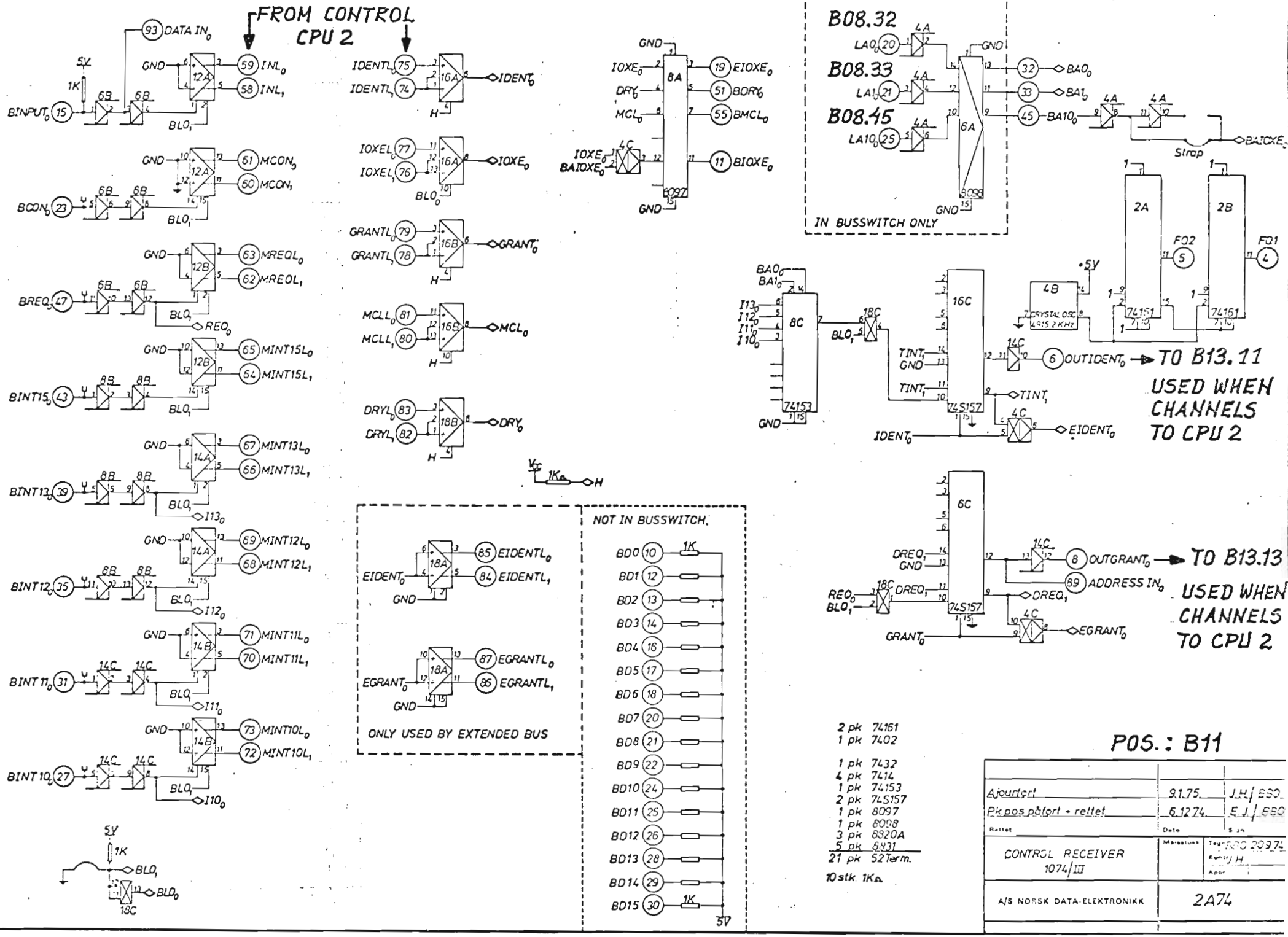


Scanned by Jonny Oddene for Sintran Data © 2010

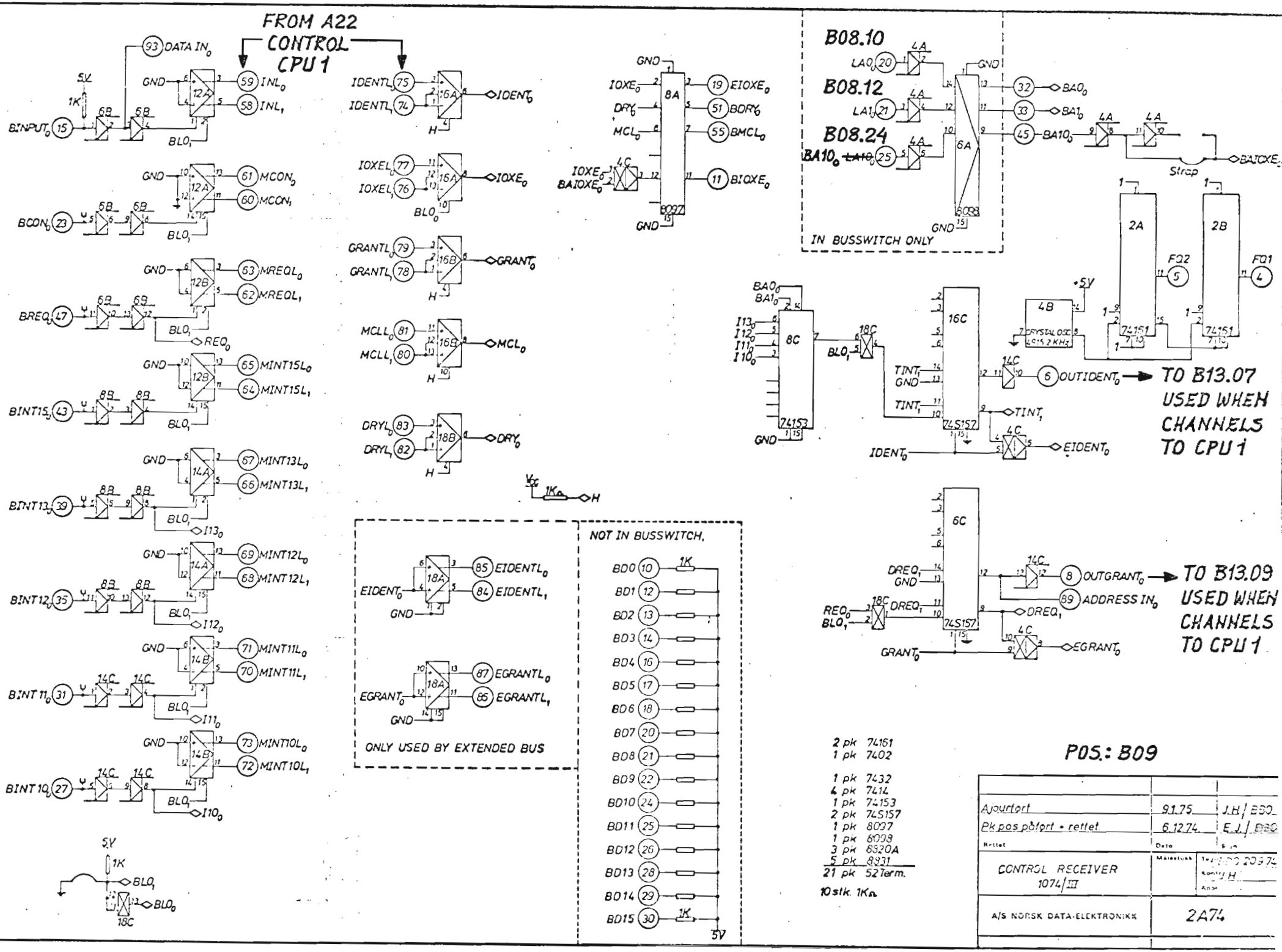


Scanned by Jonny Oddene for Sintran Data © 2010

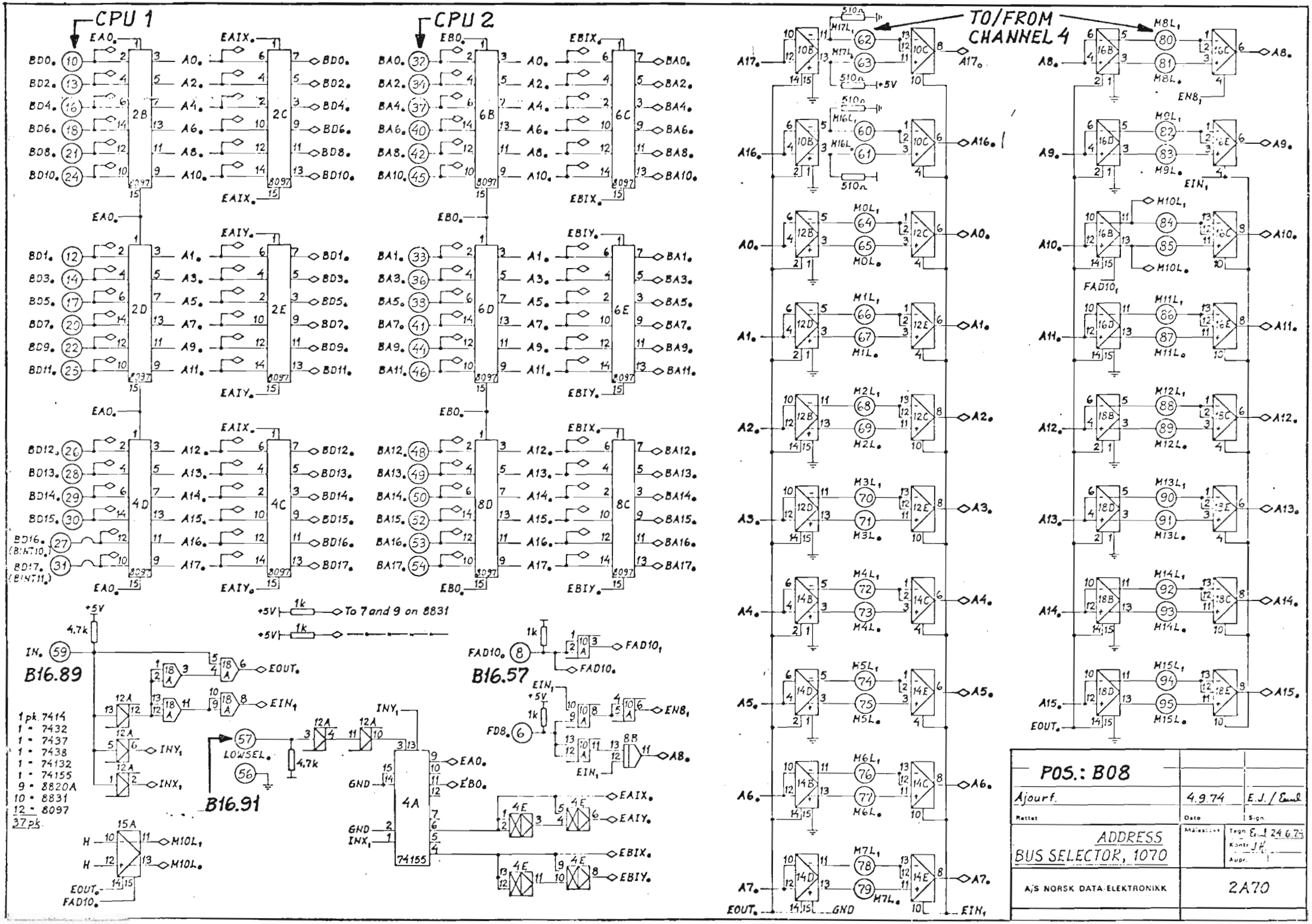


Scanned by Jonny Oddene for Sintran Data © 2010

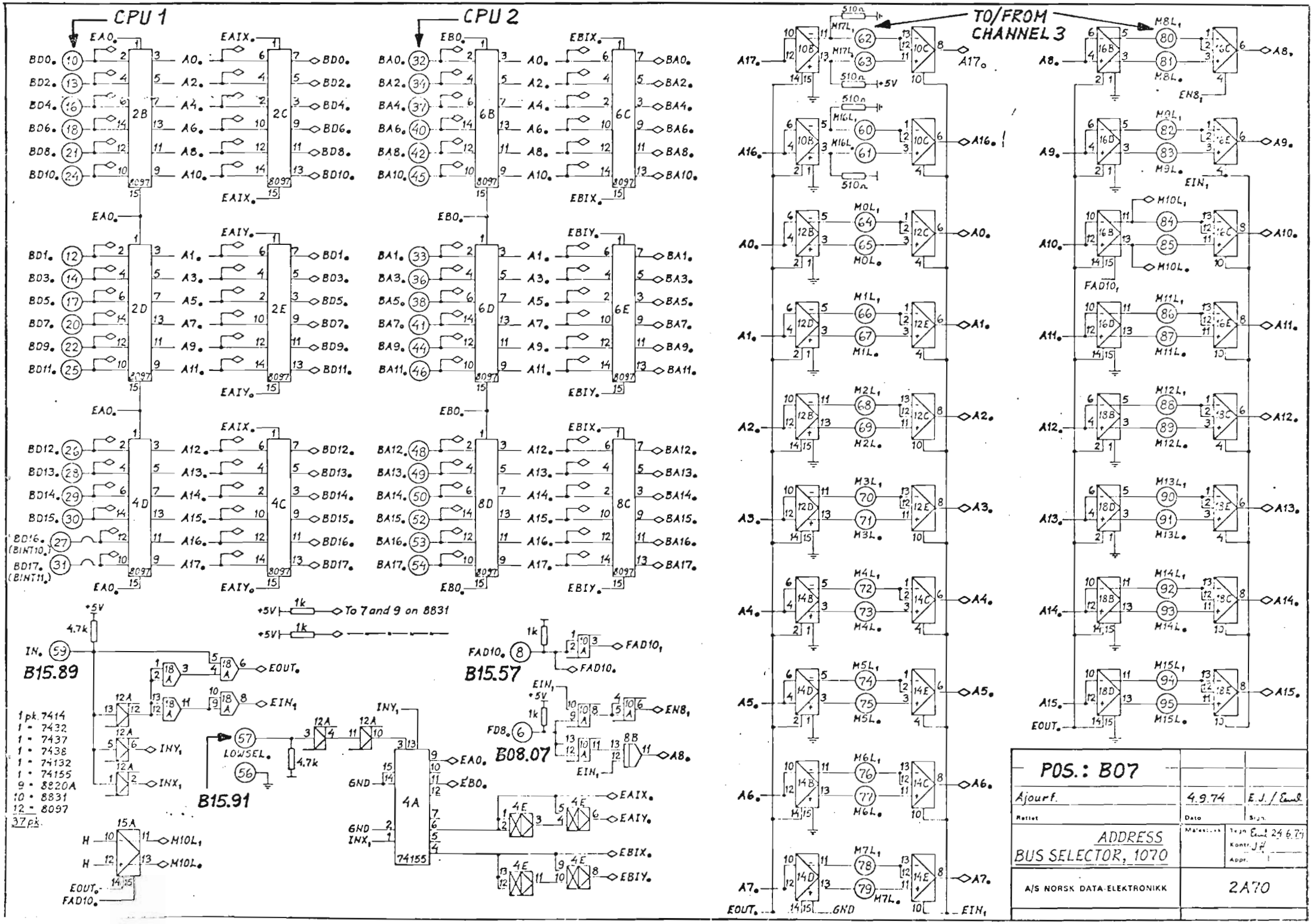


Scanned by Jonny Oddene for Sintran Data © 2010

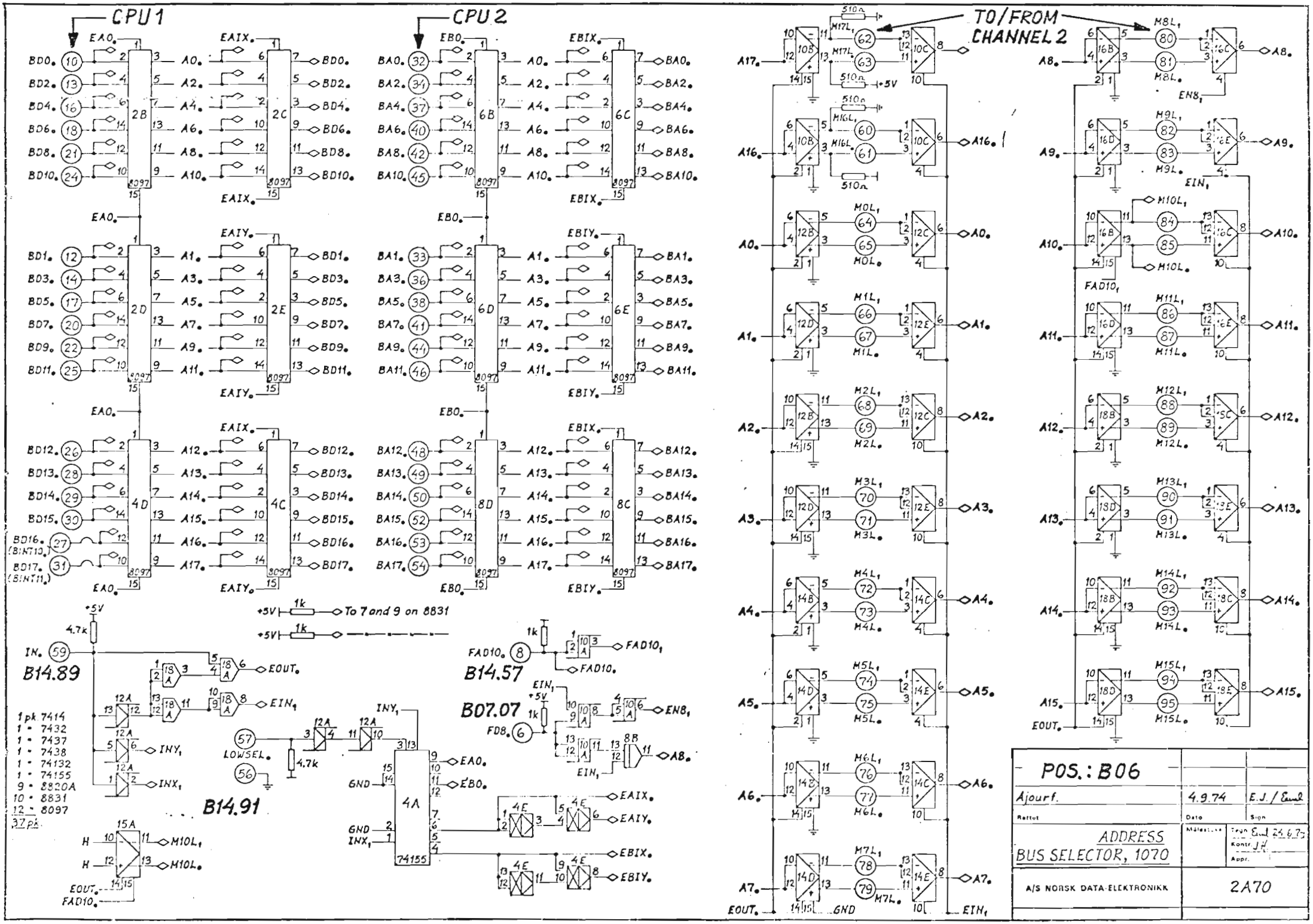


Scanned by Jonny Oddene for Sintran Data © 2010

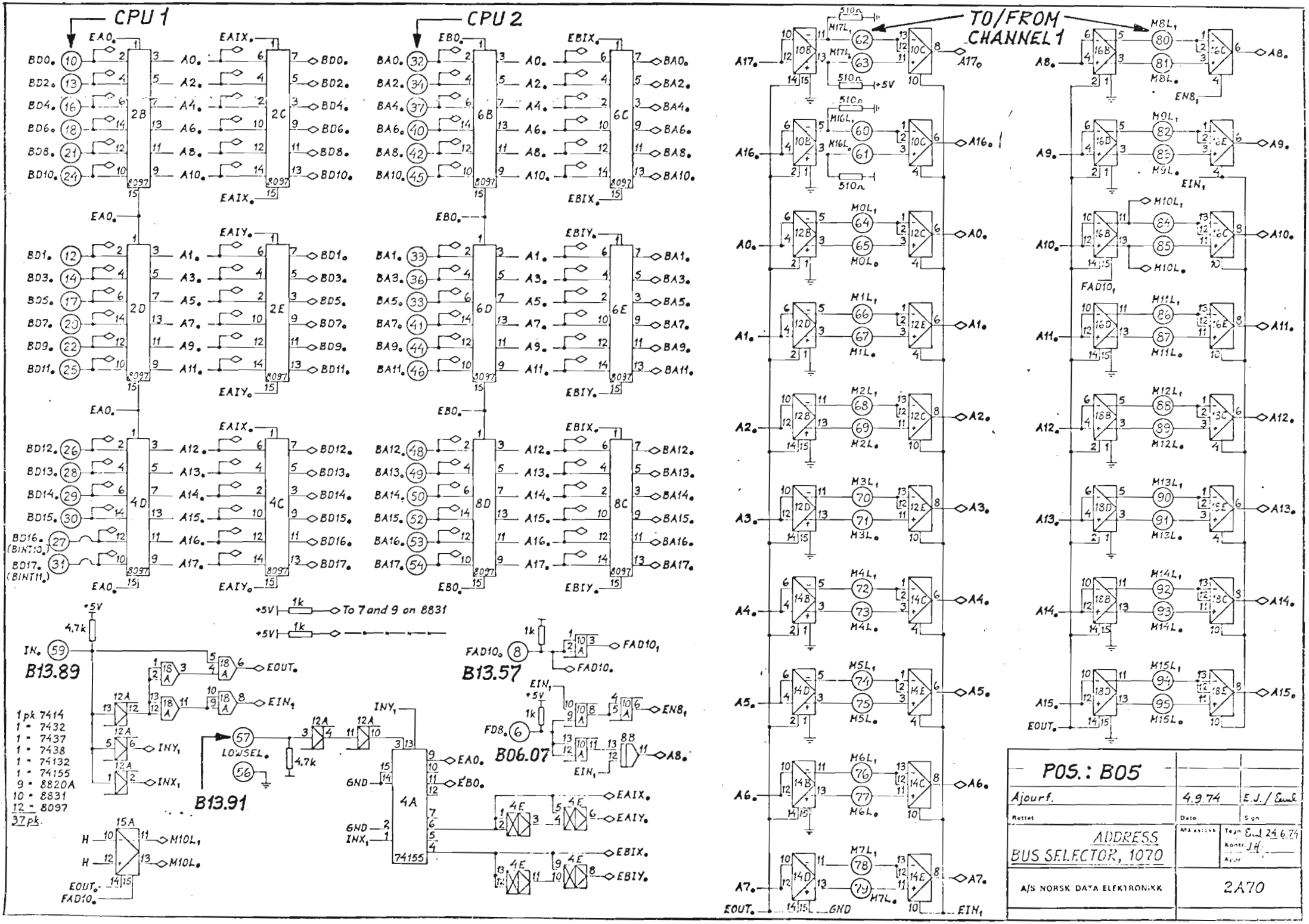


Scanned by Jonny Oddene for Sintran Data © 2010

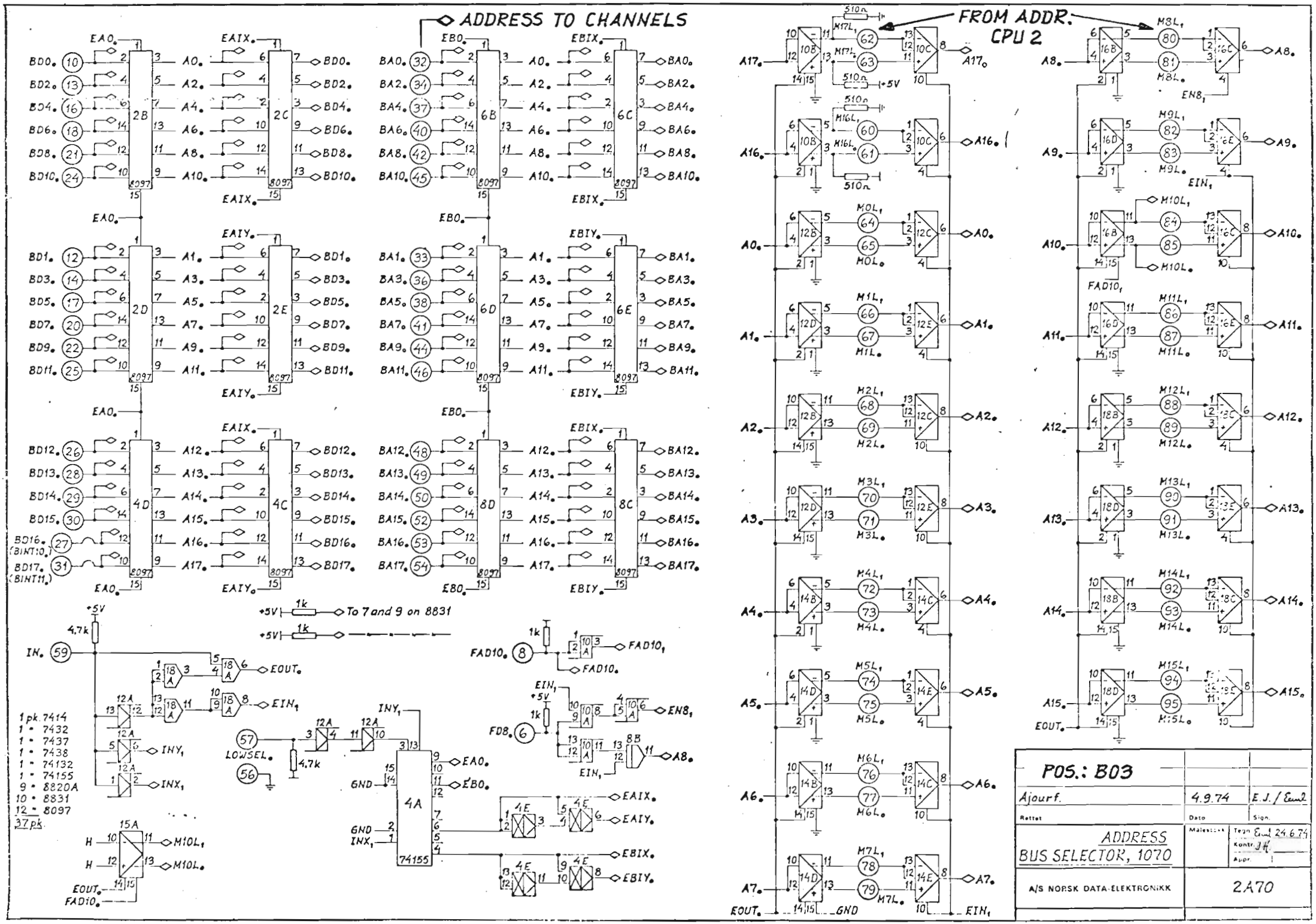


Scanned by Jonny Oddene for Sintran Data © 2010

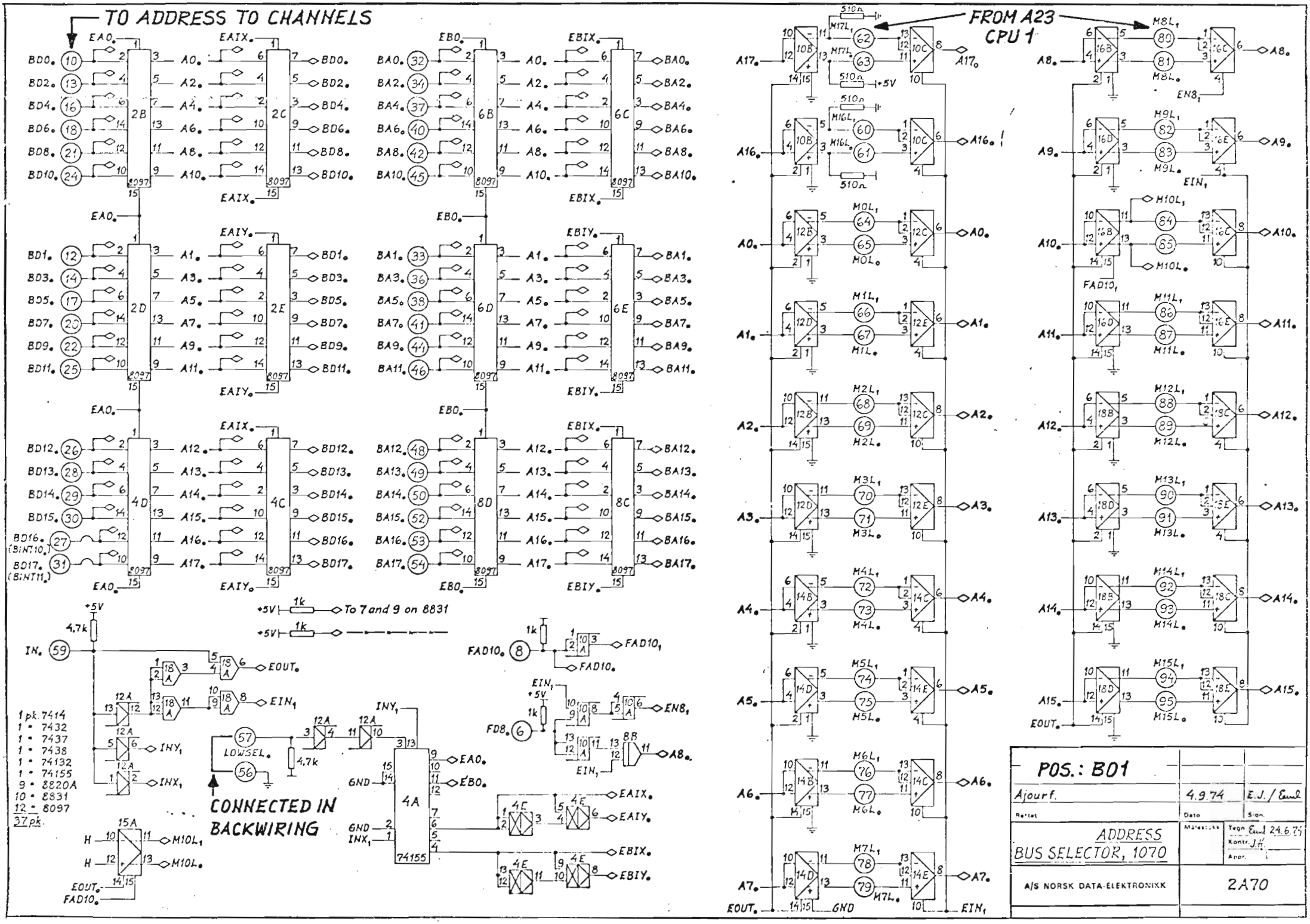


Scanned by Jonny Oddene for Sintran Data © 2010

| A/S NORSK DATA-ELEKTRONIKK | Title: BUS SWITCH INPUT ADDRESS | Drawing no.: NORD-10 |
|---|---|---|

| NO. | SIGNAL | POLARITY | PLUG BERG (CPU POS.) A23 | | PLUGG BERG B 01 | |
|---|---|---|---|---|---|---|
| 1 | EA 15 L | 0 | BERG 88 | | 95 | RED/BLACK |
| | EA 15 L | 1 | " 89 | | 94 | BLACK |
| 2 | EA 14 L | 0 | " 86 | | 93 | BROWN/BLACK |
| | EA 14 L | 1 | " 87 | | 92 | BLACK |
| 3 | EA 13 L | 0 | " 84 | | 91 | RED/BROWN |
| | EA 13 L | 1 | " 85 | | 90 | BLACK |
| 4 | EA 12 L | 0 | " 82 | | 89 | BROWN |
| | EA 12 L | 1 | " 83 | | 88 | BLACK |
| 5 | EA 11 L | 0 | " 80 | | 87 | RED/GREEN |
| | EA 11 L | 1 | " 81 | | 86 | BLACK |
| 6 | EA 10 L | 0 | " 78 | | 85 | RED |
| | EA 10 L | 1 | " 79 | | 84 | BLACK |
| 7 | EA 9 L | 0 | " 76 | | 83 | BLUE/BLACK |
| | EA 9 L | 1 | " 77 | | 82 | BLACK |
| 8 | EA 8 L | 0 | " 74 | | 81 | ORANGE |
| | EA 8 L | 1 | " 75 | | 80 | BLACK |
| 9 | EA 7 L | 0 | " 72 | | 79 | BLUE/BROWN |
| | EA 7 L | 1 | " 73 | | 78 | BLACK |
| 10 | EA 6 L | 0 | " 70 | | 77 | YELLOW |
| | EA 6 L | 1 | " 71 | | 76 | BLACK |
| 11 | EA 5 L | 0 | " 68 | | 75 | BLUE/GREEN |
| | EA 5 L | 1 | " 69 | | 74 | BLACK |
| 12 | EA 4 L | 0 | " 66 | | 73 | GREEN/BLACK |
| | EA 4 L | 1 | " 67 | | 72 | BLACK |
| 13 | EA 3 L | 0 | " 64 | | 71 | WHITE/BLACK |
| | EA 3 L | 1 | " 65 | | 70 | BLACK |
| 14 | EA 2 L | 0 | " 62 | | 69 | BLUE |
| | EA 2 L | 1 | " 63 | | 68 | BLACK |
| 15 | EA 1 L | 0 | " 60 | | 67 | WHITE/BROWN |
| | EA 1 L | 1 | " 61 | | 66 | BLACK |
| 16 | EA 0 L | 0 | " 58 | | 65 | VIOLET |
| | EA 0 L | 1 | " 59 | | 64 | BLACK |
| 17 | EA 17 L | 0 | " 92 | | 63 | |
| | EA 17 L | 1 | " 93 | | 62 | |
| 18 | EA 16 L | 0 | " 90 | | 61 | |
| | EA 16 L | 1 | " 91 | | 60 | |
| 19 | | | " | | | |
| | | | " | | | |
| 20 | | | " | | | |
| | | | " | | | |

EXTERN CHANNEL FROM CPU

| DRAWN BY TS/eml | Remarks: CPU I CPU CABINET | Replacement for | Date |
|---|---|---|---|
| APPROVED BY | | Replaced by | Date |
| DATE 17/7/74 | | | |

Scanned by Jonny Oddene for Sintran Data © 2010

| A/S NORSK DATA-ELEKTRONIKK | Title: BUS SEITCH INPUT ADDRESS | Drawing no.: NORD-10 |
|---|---|---|

| NO. | SIGNAL | POLARITY | PLUG BERG (CPU POS.) A23 | PLUG BURNDY BSA 2 | PLUG BERG BUS SWITCH RACK B 03 | |
|---|---|---|---|---|---|---|
| 1 | EA 15 L | 0 | BERG 88 | A | 95 | RED/BLACK |
| | EA 15 L | 1 | " 89 | C | 94 | BLACK |
| 2 | EA 14 L | 0 | " 86 | B | 93 | BROWN/BLACK |
| | EA 14 L | 1 | " 87 | D | 92 | BLACK |
| 3 | EA 13 L | 0 | " 84 | E | 91 | RED/BROWN |
| | EA 13 L | 1 | " 85 | H | 90 | BLACK |
| 4 | EA 12 L | 0 | " 82 | F | 89 | BROWN |
| | EA 12 L | 1 | " 83 | J | 88 | BLACK |
| 5 | EA 11 L | 0 | " 80 | K | 87 | RED/GREEN |
| | EA 11 L | 1 | " 81 | M | 86 | BLACK |
| 6 | EA 10 L | 0 | " 78 | L | 85 | RED |
| | EA 10 L | 1 | " 79 | N | 84 | BLACK |
| 7 | EA 9 L | 0 | " 76 | P | 83 | BLUE/BLACK |
| | EA 9 L | 1 | " 77 | S | 82 | BLACK |
| 8 | EA 8 L | 0 | " 74 | R | 81 | ORANGE |
| | EA 8 L | 1 | " 75 | T | 80 | BLACK |
| 9 | EA 7 L | 0 | " 72 | U | 79 | BLUE/BROWN |
| | EA 7 L | 1 | " 73 | W | 78 | BLACK |
| 10 | EA 6 L | 0 | " 70 | V | 77 | YELLOW |
| | EA 6 L | 1 | " 71 | X | 76 | BLACK |
| 11 | EA 5 L | 0 | " 68 | Y | 75 | BLUE/GREEN |
| | EA 5 L | 1 | " 69 | AA | 74 | BLACK |
| 12 | EA 4 L | 0 | " 66 | Z | 73 | GREEN/BLACK |
| | EA 4 L | 1 | " 67 | BB | 72 | BLACK |
| 13 | EA 3 L | 0 | " 64 | CC | 71 | WHITE/BLACK |
| | EA 3 L | 1 | " 65 | EE | 70 | BLACK |
| 14 | EA 2 L | 0 | " 62 | DD | 69 | BLUE |
| | EA 2 L | 1 | " 63 | FF | 68 | BLACK |
| 15 | EA 1 L | 0 | " 60 | HH | 67 | WHITE/BROWN |
| | EA 1 L | 1 | " 61 | KK | 66 | BLACK |
| 16 | EA 0 L | 0 | " 58 | JJ | 65 | VIOLET |
| | EA 0 L | 1 | " 59 | LL | 64 | BLACK |
| 17 | EA 17 L | 0 | " 92 | MM | 63 | RED/BLACK |
| | EA 17 L | 1 | " 93 | PP | 62 | BLACK |
| 18 | EA 16 L | 0 | " 90 | NN | 61 | BROWN/BLACK |
| | EA 16 L | 1 | " 91 | RR | 60 | BLACK |
| 19 | | | " | SS | | |
| | | | " | UU | | |
| 20 | | | " | TT | | |
| | | | " | VV | | |

EXTERN CHANNEL FROM CPU 2

| DRAWN BY TS/eml | Remarks: CPU 2 | Replacement for: | Date |
|---|---|---|---|
| APPROVED BY | | Replaced by | Date |
| DATE 17/7/74 | | | |

Scanned by Jonny Oddene for Sintran Data © 2010

A/S NORSK DATA-ELEKTRONIKK

# BUS SWITCH CHANNEL ADDRESS

NORD-10

| NO. | SIGNAL | POLARITY | PLUG BERG B 5 (CPU POS.) | PLUG BURNDY C RACK POS. | |
|---|---|---|---|---|---|
| 1 | EA 15 L | 0 | BERG 95 | I/O RACK 4 | BERG 65 |
| | EA 15 L | 1 | " " 94 | " | " 64 |
| 2 | EA 14 L | 0 | " " 93 | " | " 63 |
| | EA 14 L | 1 | " " 92 | " | " 62 |
| 3 | EA 13 L | 0 | " " 91 | " C 4 | " 61 |
| | EA 13 L | 1 | " " 90 | " C 4 | " 60 |
| 4 | EA 12 L | 0 | " " 89 | " C 4 | " 59 |
| | EA 12 L | 1 | " " 88 | " C 4 | " 58 |
| 5 | EA 11 L | 0 | " " 87 | I/O RACK 3 | BERG 65 |
| | EA 11 L | 1 | " " 86 | " | " 64 |
| 6 | EA 10 L | 0 | " " 85 | " | " 63 |
| | EA 10 L | 1 | " " 84 | " | " 62 |
| 7 | EA 9 L | 0 | " " 83 | " C 3 | " 61 |
| | EA 9 L | 1 | " " 82 | " C 3 | " 60 |
| 8 | EA 8 L | 0 | " " 81 | " C 3 | " 59 |
| | EA 8 L | 1 | " " 80 | " C 3 | " 58 |
| 9 | EA 7 L | 0 | " " 79 | I/O RACK 2 | BERG 65 |
| | EA 7 L | 1 | " " 78 | " | " 64 |
| 10 | EA 6 L | 0 | " " 77 | " | " 63 |
| | EA 6 L | 1 | " " 76 | " | " 62 |
| 11 | EA 5 L | 0 | " " 75 | " C 2 | " 61 |
| | EA 5 L | 1 | " " 74 | " C 2 | " 60 |
| 12 | EA 4 L | 0 | " " 73 | " C 2 | " 59 |
| | EA 4 L | 1 | " " 72 | " C 2 | " 58 |
| 13 | EA 3 L | 0 | " " 71 | I/O RACK 1 | BERG 65 |
| | EA 3 L | 1 | " " 70 | " | " 64 |
| 14 | EA 2 L | 0 | " " 69 | " | " 63 |
| | EA 2 L | 1 | " " 68 | " | " 62 |
| 15 | EA 1 L | 0 | " " 67 | " C 1 | " 61 |
| | EA 1 L | 1 | " " 66 | " C 1 | " 60 |
| 16 | EA 0 L | 0 | " " 65 | " C 1 | " 59 |
| | EA 0 L | 1 | " " 64 | " C 1 | " 58 |
| 17 | EA 17 L | 0 | " " 63 | | |
| | EA 17 L | 1 | " " 62 | | |
| 18 | EA 16 L | 0 | " " 61 | | |
| | EA 16 L | 1 | " " 60 | | |
| 19 | | | " " | | |
| | | | " " | | |
| 20 | | | " " | | |
| | | | " " | | |
| 21 | | | " " | | |

BUS CHANNEL 1

BUS SWITCH CHANNEL I

| | | | |
|---|---|---|---|
| DRAWN BY TM/eml | Remarks | CPU I<br>CPU CABINET | Replacement for / Date |
| APPROVED BY | | | Replaced by / Date |
| DATE 15/8/73 | | | |

Scanned by Jonny Oddene for Sintran Data © 2010

A/S NORSK DATA-ELEKTRONIKK

BUS SWITCH CHANNEL ADDRESS

NORD-10

| NO. | SIGNAL | POLARITY | CPU 1 PLUG BERG BUS SWITCH B 6 | PLUG BURNDY 2 BCA | CPU 2 RACK POS. | |
|---|---|---|---|---|---|---|
| 1 | EA 15 L | 0 | BERG 95 | A | I/O RACK 4 | BERG 65 |
| | EA 15 L | 1 | " 94 | C | " | " 64 |
| 2 | EA 14 L | 0 | " 93 | B | " | " 63 |
| | EA 14 L | 1 | " 92 | D | " C4 | " 62 |
| 3 | EA 13 L | 0 | " 91 | E | " | " 61 |
| | EA 13 L | 1 | " 90 | H | " | " 60 |
| 4 | EA 12 L | 0 | " 89 | F | " | " 59 |
| | EA 12 L | 1 | " 88 | J | " | " 58 |
| 5 | EA 11 L | 0 | " 87 | K | I/O RACK 3 | " 65 |
| | EA 11 L | 1 | " 86 | M | " | " 64 |
| 6 | EA 10 L | 0 | " 85 | L | " | " 63 |
| | EA 10 L | 1 | " 84 | N | " C3 | " 62 |
| 7 | EA 9 L | 0 | " 83 | P | " | " 61 |
| | EA 9 L | 1 | " 82 | S | " | " 60 |
| 8 | EA 8 L | 0 | " 81 | R | " | " 59 |
| | EA 8 L | 1 | " 80 | T | " | " 58 |
| 9 | EA 7 L | 0 | " 79 | U | I/O RACK 2 | " 65 |
| | EA 7 L | 1 | " 78 | W | " | " 64 |
| 10 | EA 6 L | 0 | " 77 | V | " | " 63 |
| | EA 6 L | 1 | " 76 | X | " C2 | " 62 |
| 11 | EA 5 L | 0 | " 75 | Y | " | " 61 |
| | EA 5 L | 1 | " 74 | AA | " | " 60 |
| 12 | EA 4 L | 0 | " 73 | Z | " | " 59 |
| | EA 4 L | 1 | " 72 | BB | " | " 58 |
| 13 | EA 3 L | 0 | " 71 | CC | I/O RACK 1 | " 65 |
| | EA 3 L | 1 | " 70 | EE | " | " 64 |
| 14 | EA 2 L | 0 | " 69 | DD | " | " 63 |
| | EA 2 L | 1 | " 68 | FF | " C1 | " 62 |
| 15 | EA 1 L | 0 | " 67 | HH | " | " 61 |
| | EA 1 L | 1 | " 66 | KK | " | " 60 |
| 16 | EA 0 L | 0 | " 65 | JJ | " | " 59 |
| | EA 0 L | 1 | " 64 | LL | " | " 58 |
| 17 | | | " 63 | | | |
| | | | " 62 | | | |
| 18 | | | " 61 | | | |
| | | | " 60 | | | |
| 19 | | | " 59 | | | |
| | | | " 58 | | | |
| 20 | | | " 57 | | | |
| | | | " 56 | | | |

BUS SWITCH CHANNEL 2

| | | | |
|---|---|---|---|
| DRAWN BY TM/eml | Remarks | Replacement for | Date |
| APPROVED BY | CPU 2 · CPU CABINET | Replaced by | Date |
| DATE 15/8/73 | | | |

Scanned by Jonny Oddene for Sintran Data © 2010

| A/S NORSK DATA-ELEKTRONIKK | Title: BUS SWITCH INPUT. CONTROL | Drawing no.: NORD-10 |
|---|---|---|

| NO. | SIGNAL | POLARITY | PLUG BERG (CPU POS.) A22 | | PLUG BERG B 09 | |
|---|---|---|---|---|---|---|
| 1 | | | BERG 95 | | | |
| | | | " 94 | | | |
| 2 | | | " 93 | | | |
| | | | " 92 | | | |
| 3 | | | " 91 | | | |
| | | | " 90 | | | |
| 4 | | | " 89 | | | |
| | | | " 88 | | | |
| 5 | | | " 87 | | | |
| | | | " 86 | | | |
| 6 | | | " 85 | | | |
| | | | " 84 | | | |
| 7 | EDRYL | 0 | " 83 | | 83 | RED/BLACK |
| | EDRYL | 1 | " 82 | | 82 | BLACK |
| 8 | EMCL | 0 | " 81 | | 81 | BROWN/BLACK |
| | EMCL | 1 | " 80 | | 80 | BLACK |
| 9 | EGRANTL | 0 | " 79 | | 79 | RED/BROWN |
| | EGRANTL | 1 | " 78 | | 78 | BLACK |
| 10 | EIOXEL | 0 | " 77 | | 77 | BROWN |
| | EIOXEL | 1 | " 76 | | 76 | BLACK |
| 11 | EIDENTL | 0 | " 75 | | 75 | RED/GREEN |
| | EIDENTL | 1 | " 74 | | 74 | BLACK |
| 12 | EI 10 L | 0 | " 73 | | 73 | RED |
| | EI 10 L | 1 | " 72 | | 72 | BLACK |
| 13 | EI 11 L | 0 | " 71 | | 71 | BLUE/BLACK |
| | EI 11 L | 1 | " 70 | | 70 | BLACK |
| 14 | EI 12 L | 0 | " 69 | | 69 | ORANGE |
| | EI 12 L | 1 | " 68 | | 68 | BLACK |
| 15 | EI 13 L | 0 | " 67 | | 67 | BLUE/BROWN |
| | EI 13 L | 1 | " 66 | | 66 | BLACK |
| 16 | EI 15 L | 0 | " 65 | | 65 | YELLOW |
| | EI 15 L | 1 | " 64 | | 64 | BLACK |
| 17 | EREQL | 0 | " 63 | | 63 | BLUE/GREEN |
| | EREQL | 1 | " 62 | | 62 | BLACK |
| 18 | ECONL | 0 | " 61 | | 61 | GREEN/BLACK |
| | ECONL | 1 | " 60 | | 60 | BLACK |
| 19 | EINL | 0 | " 59 | | 59 | WHITE/BLACK |
| | EINL | 1 | " 58 | | 58 | BLACK |
| 20 | | | " 57 | | | |
| | | | " 56 | | | |

EXTERN CHANNEL FROM CPU

| DRAWN BY TS/eml | Remarks: CPU I CPU CABINET | Replacement for | Date |
|---|---|---|---|
| APPROVED BY | | Replaced by | Date |
| DATE 17/7/74 | | | |

Scanned by Jonny Oddene for Sintran Data © 2010

| A/S NORSK DATA-ELEKTRONIKK | Title: BUS SWITCH INPUT CONTROL | Drawing no.: NORD-10 |
|---|---|---|

| NO. | SIGNAL | POLARITY | PLUG BERG (CPU POS.) A22 | PLUG BURNDY BCS 2 | PLUG BERG BUS SWITCH RACK B 11 | |
|---|---|---|---|---|---|---|
| 1 | | | BERG 95 | A | | |
| | | | " 94 | C | | |
| 2 | | | " 93 | B | | |
| | | | " 92 | D | | |
| 3 | | | " 91 | E | | |
| | | | " 90 | H | | |
| 4 | | | " 89 | F | | |
| | | | " 88 | J | | |
| 5 | | | " 87 | K | | |
| | | | " 86 | M | | |
| 6 | | | " 85 | L | | |
| | | | " 84 | N | | |
| 7 | EDRYL | 0 | " 83 | P | BERG 83 | RED/BLACK |
| | EDRYL | 1 | " 82 | S | 82 | BLACK |
| 8 | EMCL | 0 | " 81 | R | 81 | BROWN/BLACK |
| | EMCL | 1 | " 80 | T | 80 | BLACK |
| 9 | EGRANTL | 0 | " 79 | U | 79 | RED/BROWN |
| | EGRANTL | 1 | " 78 | W | 78 | BLACK |
| 10 | EIOXEL | 0 | " 77 | V | 77 | BROWN |
| | EIOXEL | 1 | " 76 | X | 76 | BLACK |
| 11 | EIDENTL | 0 | " 75 | Y | 75 | RED/GREEN |
| | EIDENTL | 1 | " 74 | AA | 74 | BLACK |
| 12 | EI 10 L | 0 | " 73 | Z | 73 | RED |
| | EI 10 L | 1 | " 72 | BB | 72 | BLACK |
| 13 | EI 11 L | 0 | " 71 | CC | 71 | BLUE/BLACK |
| | EI 11 L | 1 | " 70 | EE | 70 | BLACK |
| 14 | EI 12 L | 0 | " 69 | DD | 69 | ORANGE |
| | EI 12 L | 1 | " 68 | FF | 68 | BLACK |
| 15 | EI 13 L | 0 | " 67 | HH | 67 | BLUE/BROWN |
| | EI 13 L | 1 | " 66 | KK | 66 | BLACK |
| 16 | EI 15 L | 0 | " 65 | JJ | 65 | YELLOW |
| | EI 15 L | 1 | " 64 | LL | 64 | BLACK |
| 17 | EREQL | 0 | " 63 | MM | 63 | BLUE/GREEN |
| | EREQL | 1 | " 62 | PP | 62 | BLACK |
| 18 | ECONL | 0 | " 61 | NN | 61 | GREEN/BLACK |
| | ECONL | 1 | " 60 | RR | 60 | BLACK |
| 19 | EINL | 0 | " 59 | SS | 59 | WHITE/BLACK |
| | EINL | 1 | " 58 | UU | 58 | BLACK |
| 20 | | | " 57 | TT | | |
| | | | " 56 | VV | | |

EXTERN CHANNEL FROM CPU 2

| DRAWN BY TS/eml | Remarks | Replacement for | Date |
|---|---|---|---|
| APPROVED BY | CPU 2 | Replaced by | Date |
| DATE 17/7/74 | | | |

Scanned by Jonny Oddene for Sintran Data © 2010

A/S NORSK DATA-ELEKTRONIKK

# BUS SWITCH CHANNEL CONTROL

NORD-10

| NO. | SIGNAL | POLARITY | PLUG BERG (CPU POS.) B 13 | | | PLUGG BERG C 5 |
|---|---|---|---|---|---|---|
| 1 | | | BERG 95 | | | |
| | | | " 94 | | | |
| 2 | | | " 93 | | | |
| | | | " 92 | | | |
| 3 | | | " 91 | | | |
| | | | " 90 | | | |
| 4 | | | " 89 | | | |
| | | | " 88 | | | |
| 5 | | | " 87 | | | |
| | | | " 86 | | | |
| 6 | | | " 85 | | | |
| | | | " 84 | | | |
| 7 | EDRYL | 0 | " 83 | | | BERG 83 |
| | EDRYL | 1 | " 82 | | | " 82 |
| 8 | EMCL | 0 | " 81 | | | " 81 |
| | EMCL | 1 | " 80 | | | " 80 |
| 9 | EGRANTL | 0 | " 79 | | | " 79 |
| | EGRANTL | 1 | " 78 | | | " 78 |
| 10 | EIOXEL | 0 | " 77 | | | " 77 |
| | EIOXEL | 1 | " 76 | | | " 76 |
| 11 | EIDENTL | 0 | " 75 | | | " 75 |
| | EIDENTL | 1 | " 74 | | | " 74 |
| 12 | EI 10 L | 0 | " 73 | | | " 73 |
| | EI 10 L | 1 | " 72 | | | " 72 |
| 13 | EI 11 L | 0 | " 71 | | | " 71 |
| | EI 11 L | 1 | " 70 | | | " 70 |
| 14 | EI 12 L | 0 | " 69 | | | " 69 |
| | EI 12 L | 1 | " 68 | | | " 68 |
| 15 | EI 13 L | 0 | " 67 | | | " 67 |
| | EI 13 L | 1 | " 66 | | | " 66 |
| 16 | EI 15 L | 0 | " 65 | | | " 65 |
| | EI 15 L | 1 | " 64 | | | " 64 |
| 17 | EREQL | 0 | " 63 | | | " 63 |
| | EREQL | 1 | " 62 | | | " 62 |
| 18 | ECONL | 0 | " 61 | | | " 61 |
| | ECONL | 1 | " 60 | | | " 60 |
| 19 | EINL | 0 | " 59 | | | " 59 |
| | EINL | 1 | " 58 | | | " 58 |
| 20 | | | " 57 | | | |
| | | | " 56 | | | |
| 21 | | | " 55 | | | |
| | | | " 54 | | | |

BUS CHANNEL 1

## BUS SWITCH CHANNEL 1

| | | | |
|---|---|---|---|
| DRAWN BY TM/eml | Remarks | CPU 1 CPU CABINET | Replacement for / Date |
| APPROVED BY | | | Replaced by / Date |
| DATE 16/8/73 | | | |

Scanned by Jonny Oddene for Sintran Data © 2010

A/S NORSK DATA-ELEKTRONIKK

BUS SWITCH CHANNEL CONTROL

NORD-10

| NO. | SIGNAL | POLARITY | CPU 2 PLUG BERG B 14 BUS SWITCH | CPU 2 PLUG BERG B 5 | PLUGG BURNDY 2 BCC | |
|---|---|---|---|---|---|---|
| 1 | | | BERG 95 | | | |
| | | | " " 94 | | | |
| 2 | | | " " 93 | | | |
| | | | " " 92 | | | |
| 3 | | | " " 91 | | | |
| | | | " " 90 | | | |
| 4 | | | " " 89 | | | |
| | | | " " 88 | | | |
| 5 | | | " " 87 | | | |
| | | | " " 86 | | | |
| 6 | | | " " 85 | | | |
| | | | " " 84 | | | |
| 7 | EDRYL | 0 | " " 83 | BERG 83 | P | |
| | EDRYL | 1 | " " 82 | " 82 | S | |
| 8 | EMCL | 0 | " " 81 | " 81 | R | |
| | EMCL | 1 | " " 80 | " 80 | T | |
| 9 | EGRANTL | 0 | " " 79 | " 79 | U | |
| | EGRANTL | 1 | " " 78 | " 78 | W | |
| 10 | EIOXEL | 0 | " " 77 | " 77 | V | |
| | EIOXEL | 1 | " " 76 | " 76 | X | |
| 11 | EIDENTL | 0 | " " 75 | " 75 | Y | |
| | EIDENTL | 1 | " " 74 | " 74 | AA | |
| 12 | EI 10 L | 0 | " " 73 | " 73 | Z | |
| | EI 10 L | 1 | " " 72 | " 72 | BB | |
| 13 | EI 11 L | 0 | " " 71 | " 71 | CC | |
| | EI 11 L | 1 | " " 70 | " 70 | EE | |
| 14 | EI 12 L | 0 | " " 69 | " 69 | DD | |
| | EI 12 L | 1 | " " 68 | " 68 | FF | |
| 15 | EI 13 L | 0 | " " 67 | " 67 | HH | |
| | EI 13 L | 1 | " " 66 | " 66 | KK | |
| 16 | EI 15 L | 0 | " " 65 | " 65 | JJ | |
| | EI 15 L | 1 | " " 64 | " 64 | LL | |
| 17 | EREQL | 0 | " " 63 | " 63 | MM | |
| | EREQL | 1 | " " 62 | " 62 | PP | |
| 18 | ECONL | 0 | " " 61 | " 61 | NN | |
| | ECONL | 1 | " " 60 | " 60 | RR | |
| 19 | EINL | 0 | " " 59 | " 59 | SS | |
| | EINL | 1 | " " 58 | " 58 | UU | |
| 20 | | | " " 57 | | TT | |
| | | | " " 56 | | | |

BUS CHANNEL 2

BUS SWITCH CHANNEL 2

| | | | |
|---|---|---|---|
| DRAWN BY TM/eml | Remarks | CPU 2 CPU CABINET | Replacement for / Date |
| APPROVED BY | | | Replaced by / Date |
| DATE 16/8/73 | | | |

Scanned by Jonny Oddene for Sintran Data © 2010

| A/S NORSK DATA-ELEKTRONIKK | Title: BUS SWITCH INPUT DATA | Drawing no.: NORD-10 |
|---|---|---|

| NO. | SIGNAL | POLARITY | PLUG BERG (CPU POS.) A24 | | PLUG BERG B 17 | |
|---|---|---|---|---|---|---|
| 1 | ED 15 L | 0 | BERG 88 | | 95 | RED/BLACK |
| | ED 15 L | 1 | " 89 | | 94 | BLACK |
| 2 | ED 14 L | 0 | " 86 | | 93 | BROWN/BLACK |
| | ED 14 L | 1 | " 87 | | 92 | BLACK |
| 3 | ED 13 L | 0 | " 84 | | 91 | RED/BROWN |
| | ED 13 L | 1 | " 85 | | 90 | BLACK |
| 4 | ED 12 L | 0 | " 82 | | 89 | BROWN |
| | ED 12 L | 1 | " 83 | | 88 | BLACK |
| 5 | ED 11 L | 0 | " 80 | | 87 | RED/GREEN |
| | ED 11 L | 1 | " 81 | | 86 | BLACK |
| 6 | ED 10 L | 0 | " 78 | | 85 | RED |
| | ED 10 L | 1 | " 79 | | 84 | BLACK |
| 7 | ED 9 L | 0 | " 76 | | 83 | BLUE/BLACK |
| | ED 9 L | 1 | " 77 | | 82 | BLACK |
| 8 | ED 8 L | 0 | " 74 | | 81 | ORANGE |
| | ED 8 L | 1 | " 75 | | 80 | BLACK |
| 9 | ED 7 L | 0 | " 72 | | 79 | BLUE/BROWN |
| | ED 7 L | 1 | " 73 | | 78 | BLACK |
| 10 | ED 6 L | 0 | " 70 | | 77 | YELLOW |
| | ED 6 L | 1 | " 71 | | 76 | BLACK |
| 11 | ED 5 L | 0 | " 68 | | 75 | BLUE/GREEN |
| | ED 5 L | 1 | " 69 | | 74 | BLACK |
| 12 | ED 4 L | 0 | " 66 | | 73 | GREEN/BLACK |
| | ED 4 L | 1 | " 67 | | 72 | BLACK |
| 13 | ED 3 L | 0 | " 64 | | 71 | WHITE/BLACK |
| | ED 3 L | 1 | " 65 | | 70 | BLACK |
| 14 | ED 2 L | 0 | " 62 | | 69 | BLUE |
| | ED 2 L | 1 | " 63 | | 68 | BLACK |
| 15 | ED 1 L | 0 | " 60 | | 67 | WHITE/BROWN |
| | ED 1 L | 1 | " 61 | | 66 | BLACK |
| 16 | ED 0 L | 0 | " 58 | | 65 | VIOLET |
| | ED 0 L | 1 | " 59 | | 64 | BLACK |
| 17 | | | " 92 | | 63 | |
| | | | " 93 | | 62 | |
| 18 | | | " 90 | | 61 | |
| | | | " 91 | | 60 | |
| 19 | | | " | | | |
| | | | " | | | |
| 20 | | | " | | | |
| | | | " | | | |

EXTERN CHANNEL FROM CPU

| DRAWN BY: TS/eml | Remarks: CPU I CPU CABINET | Replacement for: | Date: |
|---|---|---|---|
| APPROVED BY: | | Replaced by | Date |
| DATE: 17/7/74 | | | |

Scanned by Jonny Oddene for Sintran Data © 2010

| A/S NORSK DATA-ELEKTRONIKK | Title: BUS SWITCH INPUT DATA | Drawing no.: NORD-10 |
|---|---|---|

| NO. | SIGNAL | POLARITY | PLUG BERG (CPU POS.) A24 | PLUG BURNDY BSD 2 | PLUG BERG BUS SWITCH RACK B 19 | |
|---|---|---|---|---|---|---|
| 1 | ED 15 L | 0 | BERG 88 | A | BERG 95 | RED/BLACK |
| | ED 15 L | 1 | " 89 | C | 94 | BLACK |
| 2 | ED 14 L | 0 | " 86 | B | 93 | BROWN/BLACK |
| | ED 14 L | 1 | " 87 | D | 92 | BLACK |
| 3 | ED 13 L | 0 | " 84 | E | 91 | RED/BROWN |
| | ED 13 L | 1 | " 85 | H | 90 | BLACK |
| 4 | ED 12 L | 0 | " 82 | F | 89 | BROWN |
| | ED 12 L | 1 | " 83 | J | 88 | BLACK |
| 5 | ED 11 L | 0 | " 80 | K | 87 | RED/GREEN |
| | ED 11 L | 1 | " 81 | M | 86 | BLACK |
| 6 | ED 10 L | 0 | " 78 | L | 85 | RED |
| | ED 10 L | 1 | " 79 | N | 84 | BLACK |
| 7 | ED 9 L | 0 | " 76 | P | 83 | BLUE/BLACK |
| | ED 9 L | 1 | " 77 | S | 82 | BLACK |
| 8 | ED 8 L | 0 | " 74 | R | 81 | ORANGE |
| | ED 8 L | 1 | " 75 | T | 80 | BLACK |
| 9 | ED 7 L | 0 | " 72 | U | 79 | BLUE/BROWN |
| | ED 7 L | 1 | " 73 | W | 78 | BLACK |
| 10 | ED 6 L | 0 | " 70 | V | 77 | YELLOW |
| | ED 6 L | 1 | " 71 | X | 76 | BLACK |
| 11 | ED 5 L | 0 | " 68 | Y | 75 | BLUE/GREEN |
| | ED 5 L | 1 | " 69 | AA | 74 | BLACK |
| 12 | ED 4 L | 0 | " 66 | Z | 73 | GREEN/BLACK |
| | ED 4 L | 1 | " 67 | BB | 72 | BLACK |
| 13 | ED 3 L | 0 | " 64 | CC | 71 | WHITE/BLACK |
| | ED 3 L | 1 | " 65 | EE | 70 | BLACK |
| 14 | ED 2 L | 0 | " 62 | DD | 69 | BLUE |
| | ED 2 L | 1 | " 63 | FF | 68 | BLACK |
| 15 | ED 1 L | 0 | " 60 | HH | 67 | WHITE/BROWN |
| | ED 1 L | 1 | " 61 | KK | 66 | BLACK |
| 16 | ED 0 L | 0 | " 58 | JJ | 65 | VIOLET |
| | ED 0 L | 1 | " 59 | LL | 64 | BLACK |
| 17 | | | " | MM | 63 | |
| | | | " | PP | 62 | |
| 18 | | | " | NN | 61 | |
| | | | " | RR | 60 | |
| 19 | | | " | SS | | |
| | | | " | UU | | |
| 20 | | | " | TT | | |
| | | | " | VV | | |

EXTERN CHANNEL FROM CPU 2

| DRAWN BY TS/eml | Remarks: CPU 2 | Replacement for | Date |
|---|---|---|---|
| APPROVED BY | | Replaced by | Date |
| DATE 17/7/74 | | | |

Scanned by Jonny Oddene for Sintran Data © 2010

A/S NORSK DATA-ELEKTRONIKK

Title: BUS SWITCH CHANNEL DATA

Drawing no.: NORD-10

| NO. | SIGNAL | POLARITY | PLUG BERG (CPU POS.) B 21 | PLUG BURNDY | RACK POS. C | |
|---|---|---|---|---|---|---|
| 1 | ED 15 L | 0 | BERG 95 | | I/O RACK 4 | BERG 75 |
| | ED 15 L | 1 | " 94 | | " | " 74 |
| 2 | ED 14 L | 0 | " 93 | | " | " 73 |
| | ED 14 L | 1 | " 92 | | " | " 72 |
| 3 | ED 13 L | 0 | " 91 | | " C 4 | " 71 |
| | ED 13 L | 1 | " 90 | | " | " 70 |
| 4 | ED 12 L | 0 | " 89 | | " | " 69 |
| | ED 12 L | 1 | " 88 | | " | " 68 |
| 5 | ED 11 L | 0 | " 87 | | I/O RACK 3 | BERG 75 |
| | ED 11 L | 1 | " 86 | | " | " 74 |
| 6 | ED 10 L | 0 | " 85 | | " | " 73 |
| | ED 10 L | 1 | " 84 | | " | " 72 |
| 7 | ED 9 L | 0 | " 83 | | " C 3 | " 71 |
| | ED 9 L | 1 | " 82 | | " | " 70 |
| 8 | ED 8 L | 0 | " 81 | | " | " 69 |
| | ED 8 L | 1 | " 80 | | " | " 68 |
| 9 | ED 7 L | 0 | " 79 | | I/O RACK 2 | BERG 75 |
| | ED 7 L | 1 | " 78 | | " | " 74 |
| 10 | ED 6 L | 0 | " 77 | | " | " 73 |
| | ED 6 L | 1 | " 76 | | " C 2 | " 72 |
| 11 | ED 5 L | 0 | " 75 | | " | " 71 |
| | ED 5 L | 1 | " 74 | | " | " 70 |
| 12 | ED 4 L | 0 | " 73 | | " | " 69 |
| | ED 4 L | 1 | " 72 | | " | " 68 |
| 13 | ED 3 L | 0 | " 71 | | I/O RACK 1 | BERG 75 |
| | ED 3 L | 1 | " 70 | | " | " 74 |
| 14 | ED 2 L | 0 | " 69 | | " | " 73 |
| | ED 2 L | 1 | " 68 | | " | " 72 |
| 15 | ED 1 L | 0 | " 67 | | " C 1 | " 71 |
| | ED 1 L | 1 | " 66 | | " | " 70 |
| 16 | ED 0 L | 0 | " 65 | | " | " 69 |
| | ED 0 L | 1 | " 64 | | " | " 68 |
| 17 | | | " 63 | | | |
| | | | " 62 | | | |
| 18 | | | " 61 | | | |
| | | | " 60 | | | |
| 19 | | | " | | | |
| | | | " | | | |
| 20 | | | " | | | |
| | | | " | | | |
| 21 | | | " | | | |

BUS CHANNEL 1

BUS SWITCH CHANNEL 1

| | | | |
|---|---|---|---|
| DRAWN BY TM/eml | Remarks: CPU 1 CPU CABINET | Replacement for | Date |
| APPROVED BY | | Replaced by | Date |
| DATE 16/8/73 | | | |

Scanned by Jonny Oddene for Sintran Data © 2010

A/S NORSK DATA-ELEKTRONIKK

Title: BUS SWITCH CHANNEL DATA

Drawing no.: NORD-10

| NO. | SIGNAL | POLARITY | CPU 1 PLUG BERG BUS SWITCH B 22 | PLUG BURNDY | CPU 2 RACK POS. 2 BCD | |
|---|---|---|---|---|---|---|
| 1 | ED 15 L | 0 | BERG 95 | A | I/O RACK 4 | BERG 75 |
| | ED 15 L | 1 | " 94 | C | " | " 74 |
| 2 | ED 14 L | 0 | " 93 | B | " | " 73 |
| | ED 14 L | 1 | " 92 | D | " B4 | " 72 |
| 3 | ED 13 L | 0 | " 91 | E | " | " 71 |
| | ED 13 L | 1 | " 90 | H | " | " 70 |
| 4 | ED 12 L | 0 | " 89 | F | " | " 69 |
| | ED 12 L | 1 | " 88 | J | " | " 68 |
| 5 | ED 11 L | 0 | " 87 | K | I/O RACK 3 | " 75 |
| | ED 11 L | 1 | " 86 | M | " | " 74 |
| 6 | ED 10 L | 0 | " 85 | L | " | " 73 |
| | ED 10 L | 1 | " 84 | N | " B3 | " 72 |
| 7 | ED 9 L | 0 | " 83 | P | " | " 71 |
| | ED 9 L | 1 | " 82 | S | " | " 70 |
| 8 | ED 8 L | 0 | " 81 | R | " | " 69 |
| | ED 8 L | 1 | " 80 | T | " | " 68 |
| 9 | ED 7 L | 0 | " 79 | U | I/O RACK 2 | " 75 |
| | ED 7 L | 1 | " 78 | W | " | " 74 |
| 10 | ED 6 L | 0 | " 77 | V | " | " 73 |
| | ED 6 L | 1 | " 76 | X | " B2 | " 72 |
| 11 | ED 5 L | 0 | " 75 | Y | " | " 71 |
| | ED 5 L | 1 | " 74 | AA | " | " 70 |
| 12 | ED 4 L | 0 | " 73 | Z | " | " 69 |
| | ED 4 L | 1 | " 72 | BB | " | " 68 |
| 13 | ED 3 L | 0 | " 71 | CC | I/O RACK 1 | " 75 |
| | ED 3 L | 1 | " 70 | EE | " | " 74 |
| 14 | ED 2 L | 0 | " 69 | DD | " | " 73 |
| | ED 2 L | 1 | " 68 | FF | " | " 72 |
| 15 | ED 1 L | 0 | " 67 | HH | " B1 | " 71 |
| | ED 1 L | 1 | " 66 | KK | " | " 70 |
| 16 | ED 0 L | 0 | " 65 | JJ | " | " 69 |
| | ED 0 L | 1 | " 64 | LL | " | " 68 |
| 17 | | | " 63 | | | |
| | | | " 62 | | | |
| 18 | | | " 61 | | | |
| | | | " 60 | | | |
| 19 | | | " 59 | | | |
| | | | " 58 | | | |
| 20 | | | " 57 | | | |
| | | | " 56 | | | |

BUS CHANNEL 2

BUS SWITCH CHANNEL 2

| | | | |
|---|---|---|---|
| DRAWN BY TM/eml | Remarks | Replacement for | Date |
| APPROVED BY | CPU CABINET | Replaced by | Date |
| DATE 16/8/73 | | | |

Scanned by Jonny Oddene for Sintran Data © 2010

| A/S NORSK DATA-ELEKTRONIKK | Title: WIRING LIST FOR BUS SWITCH PANEL | Drawing no. |
|---|---|---|

| NO. | SIGNAL | POLARITY | PLUG BURNDY (PANEL) | PLUG P1 ELCO NR. | COLOR CODE | PLUG BERG TO OP. PANEL CARD |
|---|---|---|---|---|---|---|
| 1 | BL 1 | 1 | A | A | ROSA | B 30.95 |
| | GND | 0 | C | C | SORT | B 30.94 |
| 2 | WBL 1 | 1 | B | B | HVIT | B 30.93 |
| | GND | 0 | D | D | SORT | B 30.92 |
| 3 | SEL 11 | 1 | E | E | GRÅ | B 30.91 |
| | GND | 0 | H | H | SORT | B 30.90 |
| 4 | WSEL 11 | 1 | F | F | HVIT-RØD | B 30.89 |
| | GND | 0 | J | J | SORT | B 30.88 |
| 5 | WSEL 12 | 1 | K | K | VIOLETT | B 30.87 |
| | GND | 0 | M | M | SORT | B 30.86 |
| 6 | BL 2 | 1 | L | L | HVIT-GRØNN | B 30.85 |
| | GND | 0 | N | N | SORT | B 30.84 |
| 7 | WBL 2 | 1 | P | P | BLÅ | B 30.83 |
| | GND | 0 | S | S | SORT | B 30.82 |
| 8 | SEL 2 | 1 | R | R | ORANGE-SORT | B 30.81 |
| | GND | 0 | T | T | SORT | B 30.80 |
| 9 | WSEL 21 | 1 | U | U | GRØNN-SORT | B 30.79 |
| | GND | 0 | W | W | SORT | B 30.78 |
| 10 | WSEL 22 | 1 | V | V | BLÅ-GRØNN | B 30.77 |
| | GND | 0 | X | X | SORT | B 30.76 |
| 11 | BL 3 | 1 | Y | Y | GUL | B 30.75 |
| | GND | 0 | AA | a | SORT | B 30.74 |
| 12 | WBL 3 | 1 | Z | z | BRUN-BLÅ | B 30.73 |
| | GND | 0 | BB | b | SORT | B 30.72 |
| 13 | SEL 3 | 1 | CC | c | ORANGE | B 30.71 |
| | GND | 0 | EE | e | SORT | B 30.70 |
| 14 | WSEL 31 | 1 | DD | d | BLÅ-SORT | B 30.69 |
| | GND | 0 | FF | f | SORT | B 30.68 |
| 15 | WSEL 32 | 1 | HH | h | RØD | B 30.67 |
| | GND | 0 | KK | k | SORT | B 30.66 |
| 16 | BL 4 | 1 | JJ | j | Rød/Grønn/Grå | B 30.65 |
| | GND | 0 | LL | l | SORT/BRUN | B 30.64 |
| 17 | WBL 4 | 1 | MM | m | BRUN | B 30.63 |
| | GND | 0 | PP | p | SORT | B 30.62 |
| 18 | SEL 4 | 1 | NN | n | RØD-BRUN | B 30.61 |
| | GND | 0 | RR | r | SORT | B 30.60 |
| 19 | WSEL 41 | 1 | SS | s | BRUN-SORT | B 30.59 |
| | GND | 0 | UU | u | SORT | B 30.58 |
| 20 | WSEL 42 | 1 | TT | t | RØD-SORT | B 30.57 |
| | GND | 0 | VV | v | SORT | B 30.56 |
| 21 | + 5V | | XX | w | Orange/Brun | B 30.55 |
| | + 5V | | WW | y | SORT | B 30.54 |

| DRAWN BY | Remarks | Replacement for | Date |
|---|---|---|---|
| APPROVED BY | | Replaced by | Date |
| DATE | | | |

Scanned by Jonny Oddene for Sintran Data © 2010

B1.10 – 2.10 – 3.10 – 4.10 – 5.10 – 6.10 – 7.10 – 8.10
B1.13 – 2.13 – 3.13 – 4.13 – 5.13 – 6.13 – 7.13 – 8.13
B1.17 –
B1.21 –
B1.25 –
B1.29 –

B17.34 – 18.34 – 19.34 – 20.34 – 21.34 – 22.34 – 23.34 – 24.3
B17.38
B17.42
B17.46
B17.50

| | | |
|---|---|---|
| B13.06 – B14.07 | B14.06 – B15.07 | B15.06 – B16.0 |
| 13.08 – 14.09 | 14.08 – 15.09 | 15.08 – 16.0 |
| 13.10 – 14.11 | 14.10 – 15.11 | 15.10 – 16.1 |
| 13.12 – 14.13 | 14.12 – 15.13 | 15.12 – 16.1 |
| 13.14 – 14.14 | 14.14 – 15.14 | 15.14 – 16.1 |
| 13.15 – 14.15 | 14.15 – 15.15 | 15.15 – 16.1 |
| 13.18 – 14.18 | | |
| 13.19 – 14.19 | | |
| 13.22 – 14.22 | | |
| 13.23 – 14.23 | | |
| 13.26 – 14.26 | | |
| 13.27 – 14.27 | | |
| 13.28 – 14.28 | | |
| 13.29 – 14.29 | | |
| 13.30 – 14.30 | | |
| 13.31 – 14.31 | | |
| 13.32 – 14.32 | | |
| 13.33 – 14.33 | | |
| 13.34 – 14.34 | | |
| 13.35 – 14.35 | | |
| 13.38 – 14.38 | | |
| 13.39 – 14.39 | | |
| 13.42 – 14.42 | | |
| 13.43 – 14.43 | | |
| 13.44 – 14.44 | | |
| 13.45 – 14.45 | | |
| 13.46 – 14.46 | | |
| 13.47 – 14.47 | | |
| 13.50 – 14.50 | | |
| 13.51 – 14.51 | | |
| 13.54 – 14.54 | | |
| 13.55 – 14.55 | | |
| 13.56 – 21.06 | 14.56 – 22.06 | 15.56 – 23.0 |
| 13.91 – 21.57 | 14.91 – 22.57 | 15.91 – 23.5 |
| 13.93 – 21.59 | 14.93 – 22.59 | 15.93 – 23.5 |

Scanned by Jonny Oddene for Sintran Data © 2010

B16.56 – B24.06
16.91 – 24.57
16.93 – 24.59

B1.59 – B9.89
B3.59 – B11.89
B5.57 – B13.91
B5.59 – B13.89
B6.57 – B14.91
B6.59 – B14.89
B7.57 – B15.91
B7.59 – B15.89
B8.57 – B16.91
B8.59 – B16.89

B1.04 – 2.04 – 3.04 – 4.04 – 5.04 – 6.04 – 7.04 – 8.04
B17.04 – 18.04 – 19.04 – 20.04 – 21.04 – 22.04 – 23.04 – 24.04
B17.10 – 18.10 – 19.10 – 20.10 – 21.10 – 22.10 – 23.10 – 24.10
B17.11 – 18.11 – 19.11 – 20.11 – 21.11 – 22.11 – 23.11 – 24.11

## Bus Switch Panel Pos.

B30.50 – B13.92
30.49 – 13.91

30.48 – B14.92
30.47 – 14.91

30.46 – B15.92
30.45 – 15.91

30.44 – B16.92
30.43 – 16.91

"Extra" Bus Address pos. f/i 1074-cards:

CPU A : A8, 10 – A9, 20 (BA 0)

A8, 12 – A9, 21 (BA 1)

A8, 24 – A9, 25 (BA 10)

CPU B A8, 32 – A11, 20 (BA 0)

A8, 33 – A11, 21 (BA 1)

A8, 45 – A11, 25 (BA 10)

Scanned by Jonny Oddene for Sintran Data © 2010

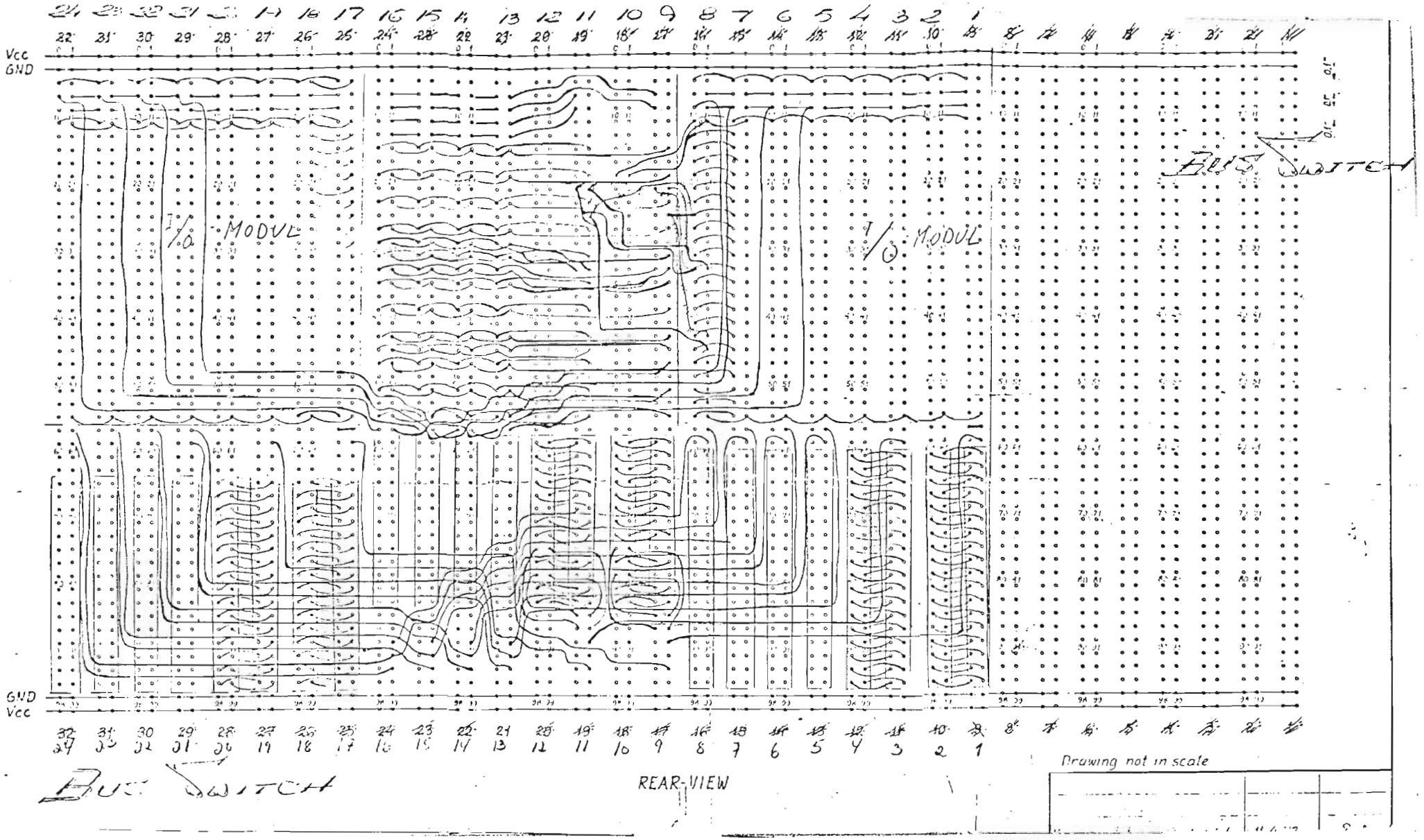


Scanned by Jonny Oddene for Sintran Data © 2010

Scanned by Jonny Oddene for Sintran Data © 2010

**– we want bits of the future**

A/S NORSK DATA-ELEKTRONIKK LØRENVEIEN 57 OSLO 5 NORWAY PHONE: 21 73 71 TELEX: 18284

Scanned by Jonny Oddene for Sintran Data © 2010