COURSE MANUAL
UH200
NORDCOM

A/S NORSK DATA-ELEKTRONIKK

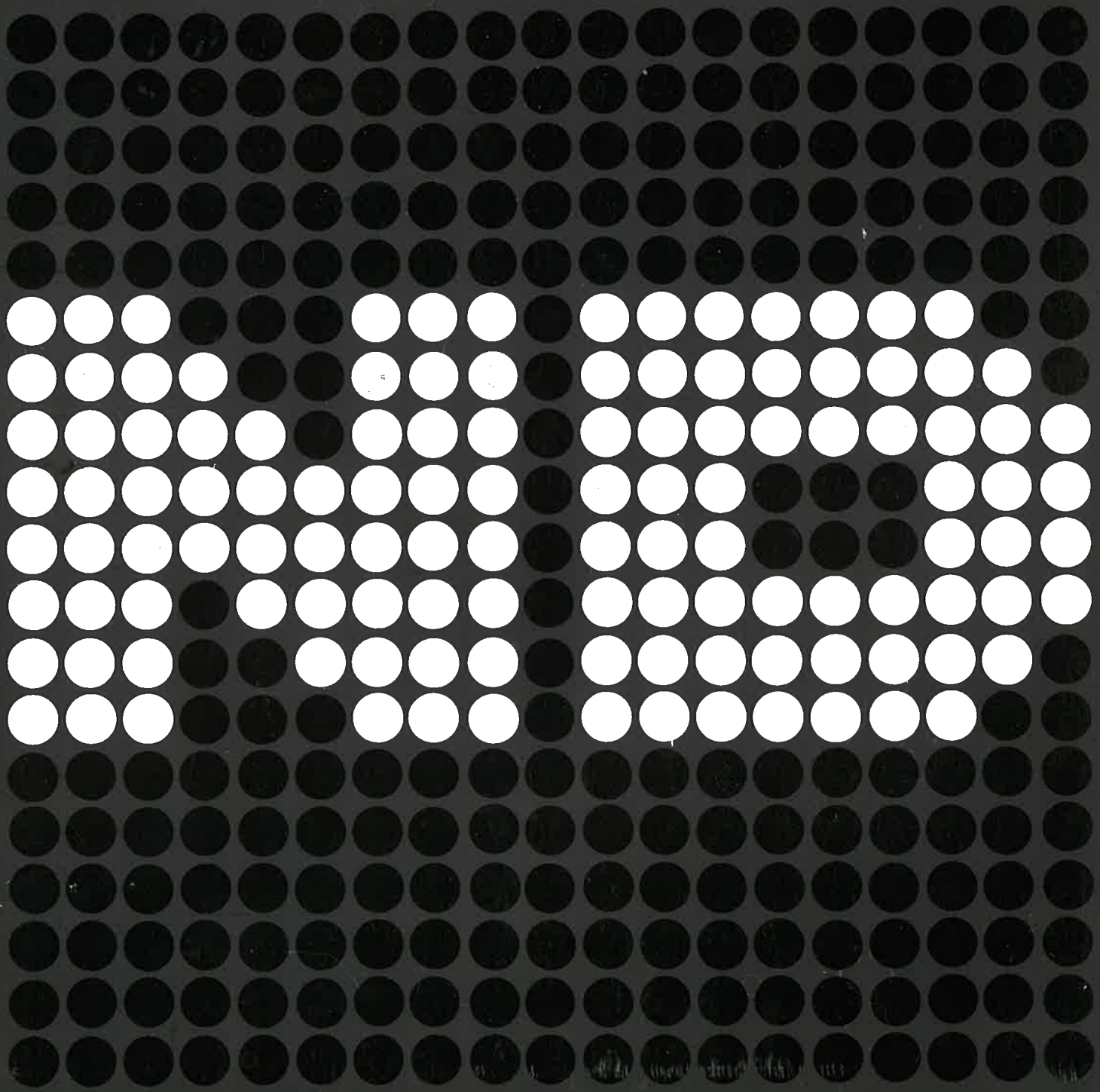

COURSE MANUAL
UH200
NORDCOM

REVISION RECORD

Revision	Notes
4/75	Original Printing.
5/76	Total revision, superceding all previous versions.

UH200 - NORDCOM
April 1975

A/S NORSK DATA-ELEKTRONIKK
Lørenveien 57, Oslo 5 - Tlf.: 21 78 71

TABLE OF CONTENTS

....oo0oo....

Section:		Page:
1.	INTRODUCTION	1-1
1.1	Applications	1-1
1.2	General Description	1-2
2.	PICTURE COMPOSING	2-1
2.1	Cross-Coupler Module (CCM)	2-5
2.2	Monitor Signals	2-5
2.3	Picture Size, Data and Colour	2-7
3.	PICTURE GENERATORS	3-1
3.1	Graphic Buffer - GB	3-1
3.2	Semigraphic Buffer - SGB	3-4
3.3	Buffer and Register Access	3-7
3.3.1	DMA Access	3-7
3.4	Buffer Access	3-7
3.5	Vector Generator Access	3-11
3.6	Register Access	3-13
3.6.1	Bank Registers	3-13
3.6.2	FG Registers	3-13
3.6.3	BG Registers	3-14
3.6.4	Composer Registers (SM and CCM)	3-14
4.	ORGANIZATION OF PICTURE SOURCES	4-1
5.	TIMING	5-1
5.1	Picture Scanning	5-1
5.2	Sync Timing	5-1
5.3	Internal Synchronous Timing	5-1
5.4	I/O Timing (Asynchronous)	5-2
5.5	Signal Description	5-2
Appendix A	NORDCOM Testmonitor	A-1
Appendix B	Interface to NORDCOM - ACM Module	B-1
Appendix C	Signal Definitions	C-1
Appendix D	NORDCOM Logical Diagrams	D-1
Appendix E	Programming Example	E-1

1. INTRODUCTION

For effective man - machine communication, it is essential that information presented to the operator is human oriented, and include the only necessary details.

It is also known that a human operator has a remarkable capacity to grasp, analyze and remember information presented to him in a picture.

In the NORDCOM system, the information is presented via colour displays, thus eliminating the needs for a large number of conventional instruments, and giving a very flexible solution.

1.1 Applications

The NORDCOM system is mainly used in industrial environments, but can also be evaluated for use in education, simulation processes, etc. A typical industrial application is an automatic production process, based on computer data acquisition and control.

In the process, a number of critical parameters are measured by electronic or pneumatic elements, such as pressure, temperature, weight and liquid flow. These parameters are sampled and read into the process-computer. Normally the process has some more or less exact equations, where the actual parameters are influencing the final result. The computer controls the input parameters to the process, such as heating, flow rates, cooling, etc.

The advantages of using NORDCOM are mainly connected to surveillance of the process, treating alarm situations, giving non-automated parameters to the process, changing process conditions etc.

All kinds of desired process charts and block diagrams can be produced. The colours in the diagram can be programmed to change depending on discrete modes.

A typical example is a valve which is red when entirely closed and green when entirely open.

In such a chart, some of the critical process parameters may be represented by special symbols, which change colour when approaching a critical limit.

The operator may then address the actual parameter symbol by means of the tracker ball cursor and display all available information on this parameter through keyboard or functional button commands.

The continuously changing parameters may be displayed on the process chart as a number, trend curves may be displayed on the same monitor or on another monitor or overlayed the process-chart.

The available information may tell the operator what relations there are between the critical parameter and other process parameters, and even propose possible actions to the operator.

1.2 General Description

The basic principle of NORDCOM-74, is to display - on a monitor - a picture generated from several types of sources. All picture-composing and source-generating is fully controlled from the connected computer.

The main features of NORDCOM-74 are:

- Up to 12 monitor outputs with individually composed pictures Each output may drive one or several paralleled RGB or B/W monitors, recorders or hard-copy units.

- Composing pictures from up to 24 different sources where up to 10 may be displayed simultaneously by means of dynamic priority selection (mixing).

- Seven different colours (including white and black), plus two different intensity levels on each colour. This means these are 15 different levels of information on each picture element.

- Up to eight semigraphical picture-generators with: 128 different programmable symbols, cursor, blinking, colour and symbol selection to be individually specified for 64 x 32 or 64 x 42 positions. Choice of 6 x 8 or 6 x 6 dot symbols.

- Up to four graphic picture-generators of 384 x 256 dots with full colour resolution (7 colours) on each dot, or up to 12 graphical generators with single colour resolution.

- Vector generator to be operating together with graphic picture-generators.
- Tracker ball with marker-generator, position register, monitor selector and Read-interrupt button.
- Grid-pattern generator with several grid-sizes.
- Several possibilities to external connections like: External sync source, external video to be internally mixed, and external video mixing.
- 16-bits data link for Post I/O Connection to computer. Possibility for duplicated I/O connection to connect alternative computer.

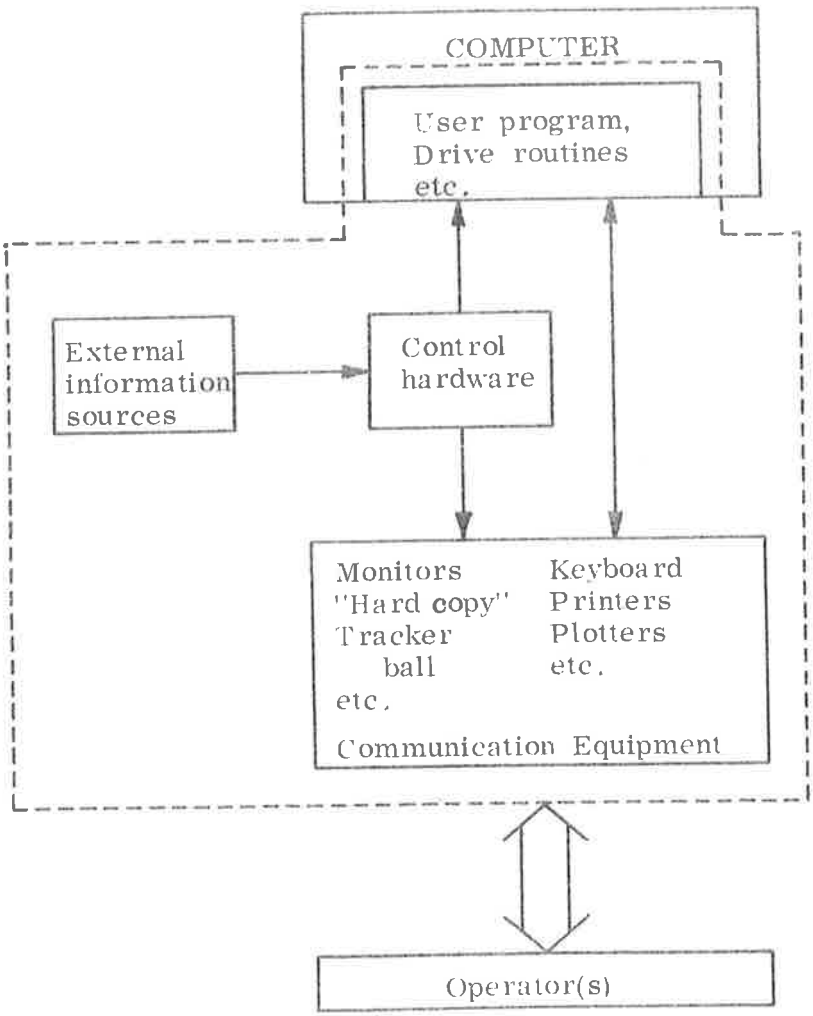

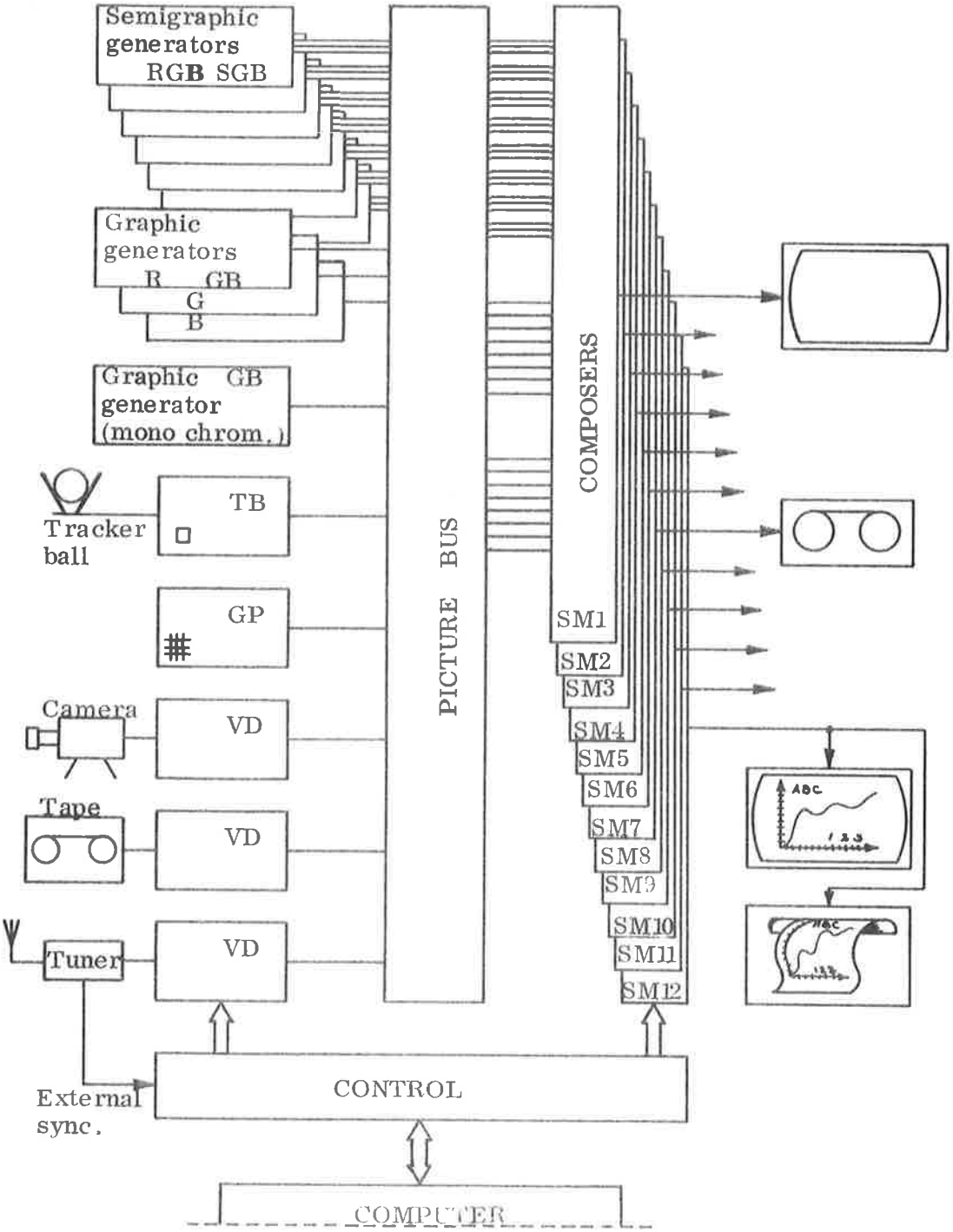
Semigraphic generators RGB SGB
Graphic generators R GB G B
Graphic GB generator (mono chrom.)
Tracker ball
TB
GP
Camera
VD
Tape
VD
Tuner
VD
External sync.
PICTURE BUS
COMPOSERS
SM1
SM2
SM3
SM4
SM5
SM6
SM7
SM8
SM9
SM10
SM11
SM12
CONTROL
COMPUTER

2. PICTURE COMPOSING

The output from NORDCOM is generated from the module called Selector Module (SM) and the maximum capacity of one NORDCOM system is 12 such modules.

The function of the SM is to "compose" a picture from all the available picture-sources on the picture-bus and to convert this to standard video signals like R, G, B and Composit sync or B/W Composit Video (grey scale).

A composed picture may consist of up to 10 out of 24 possible pictures in the following manner.

> None or one out of 8 "Fore-ground"-pictures,
> plus none or up to 8 out of 8 "Main"-pictures,
> plus none or one out of 8 "Background"-pictures.

The mixing of the pictures is done by socalled "Dynamic Priority Selection". The principle of DPS is that the origin of a given lit dot is from the highest priority picture-source which is lit on this given dot (Lit, means any colour but black).

To illustrate this, you may substitute every source-picture with figures written with non-transparent ink on transparent paper. The composed picture is then equal to a multilayer of such papers with the highest priority picture on top and the lowest priority picture on the bottom.

The degree of priority is:

1. priority:	Foreground-picture	(highest)
2. priority:	Main-picture No. 7	
3. priority:	Main-picture No. 6	
4. priority:	Main-picture No. 5	
5. priority:	Main-picture No. 4	
6. priority:	Main-picture No. 3	
7. priority:	Main-picture No. 2	
8. priority:	Main-picture No. 1	
9. priority:	Main-picture No. 0	
10. priority:	Background-picture	(lowest)

All 8 Main-Picture-lines are triple-lines, which means fully colour-resolution individually on each dot.

The Foreground-Pictures and the Background-Pictures are only single-lines, which means only single-colour information. But the colour wanted may be specified on the Selector-module.

The priority of the 8 main-pictures is fixed by hardwiring, but an optional module - called cross-coupler - may be installed to obtain flexible choice of priority to each composer.

Intensity level may be specified individually to each of the 10 possible pictures.

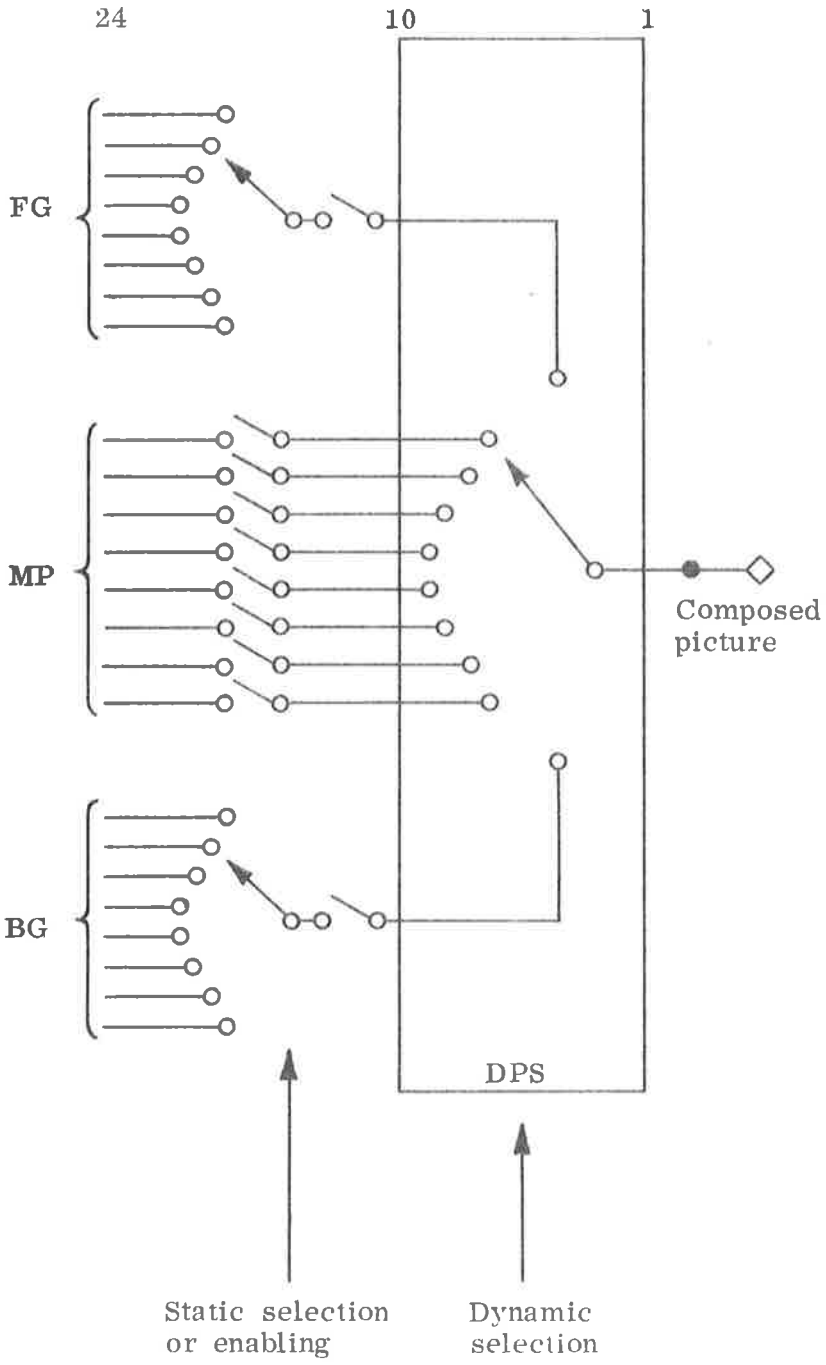

Figure 2.1.

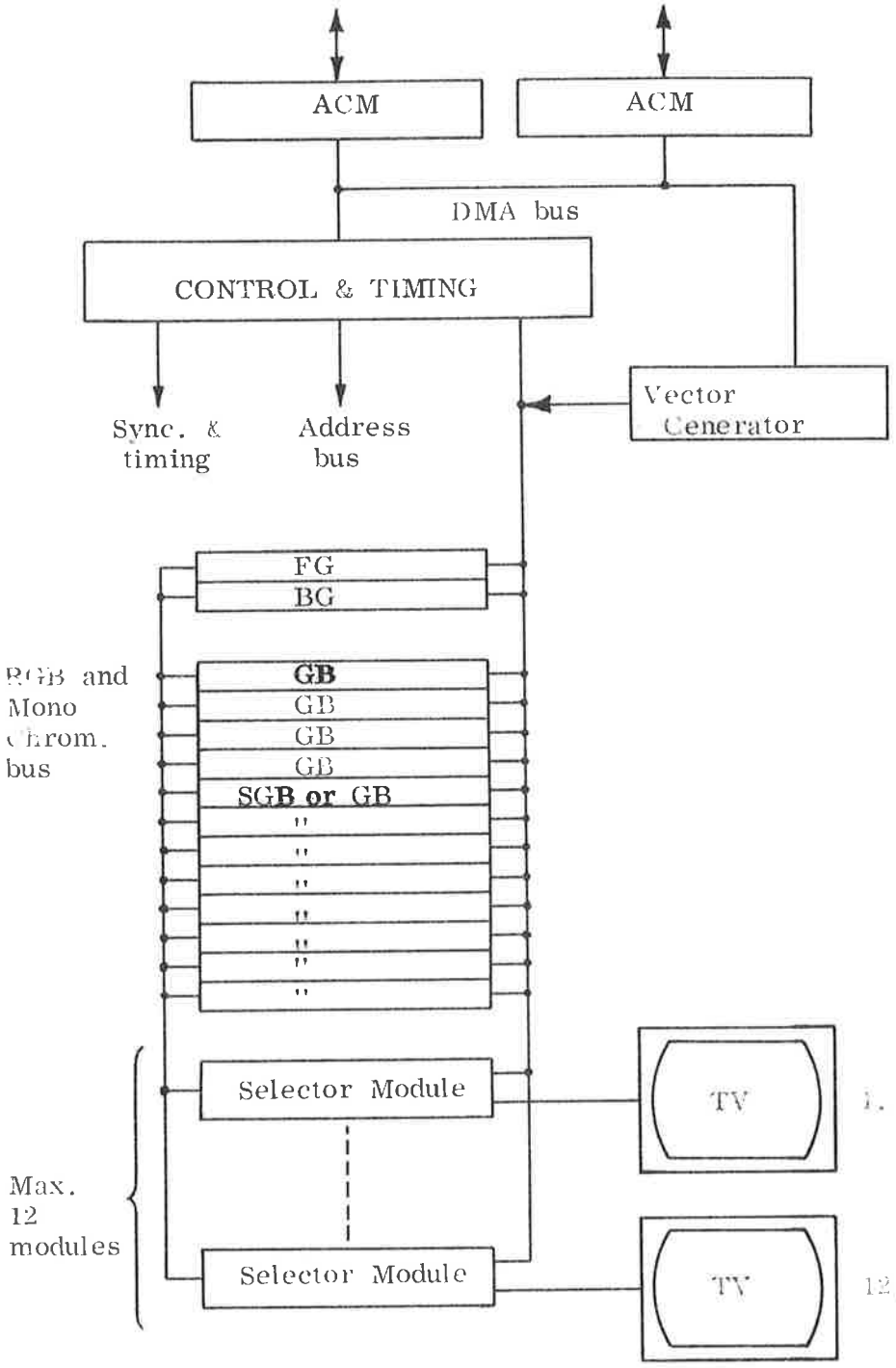

Figure 2.2: NORDCOM 74 System

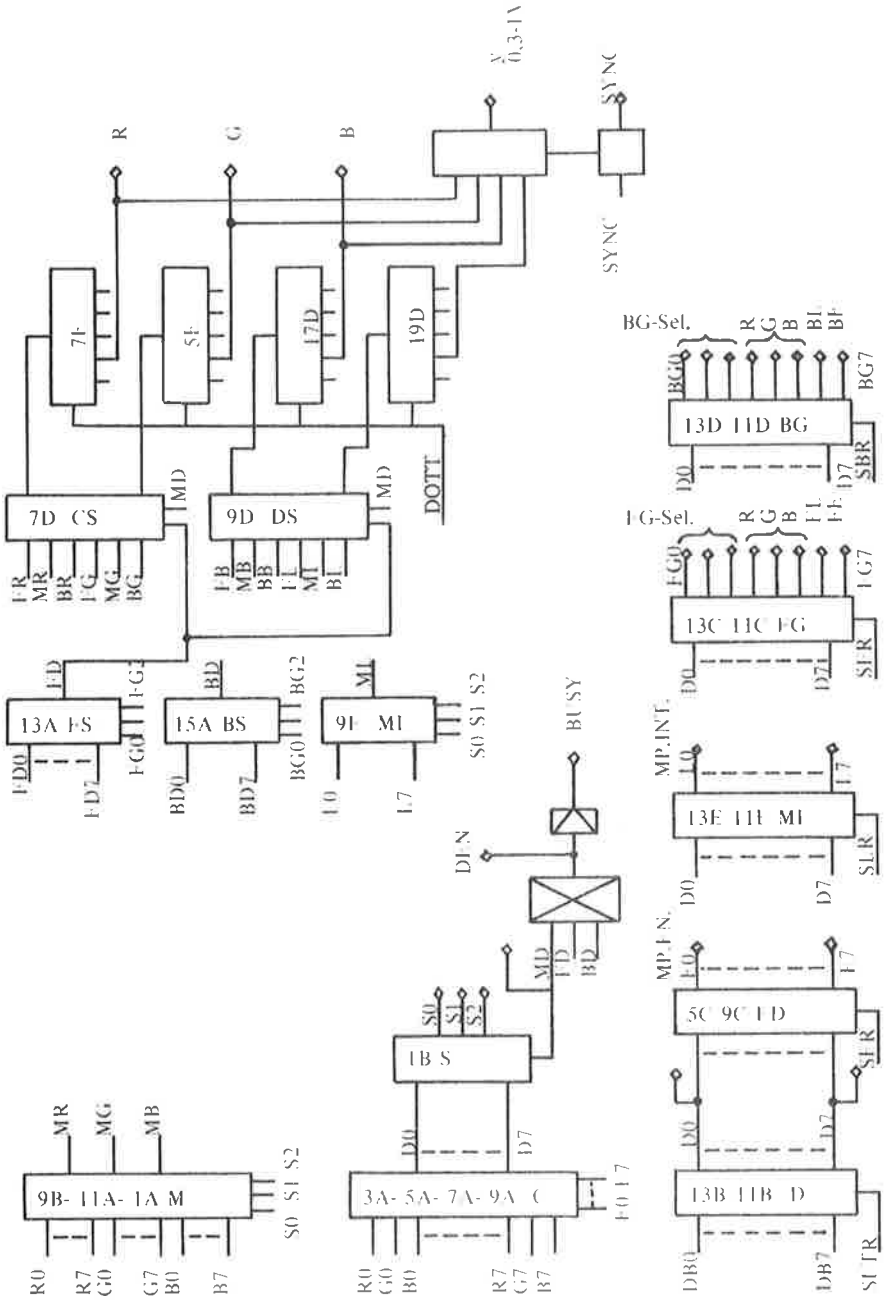

Figure 2.3: NORDCOM -74 Selector Module

2.1 Cross-Coupler Module (CCM)

If for any reason the priority of the RGB buses should be changed, a CCM will be used. It will always precede an SM, and alter the priority of every SM succeeding it, until the next CCM.

Each CCM used will decrease the maximum number of SM's by one.

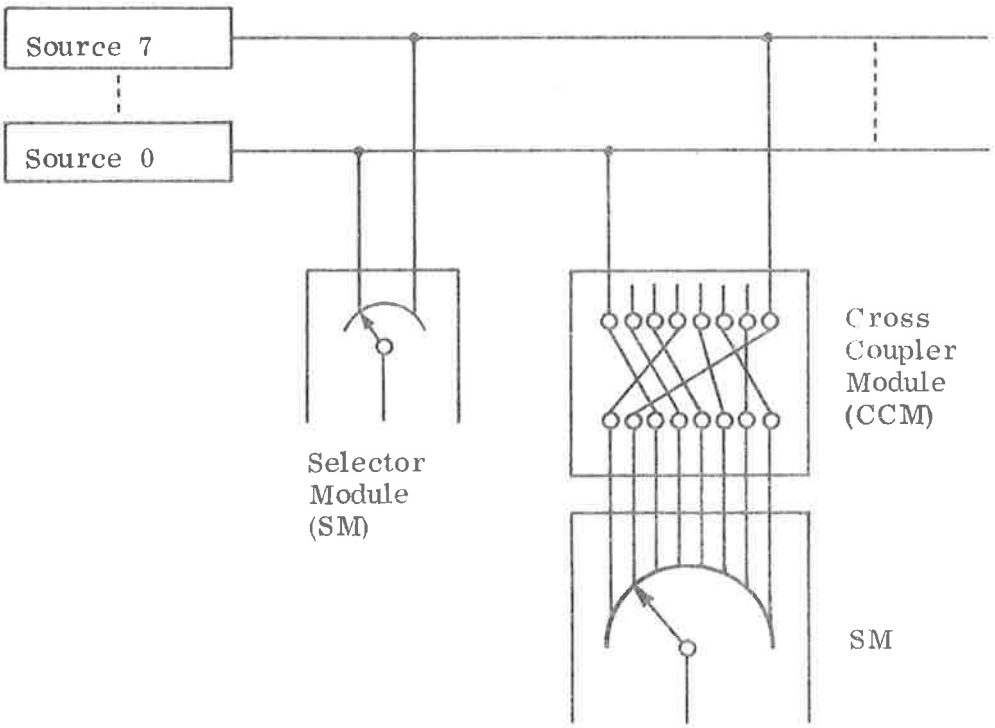

Figure 2.4:

2.2 Monitor Signals

From each Selector Module, the following signals will be found on the plug panel:

R-channel:	0-1V, 0V black, 1V red
G-channel:	0-1V, 0V black, 1V green
B-channel:	0-1V, 0V black, 1V blue
Sync:	Positive 0-1V sync pulses.

Y-signal for connection to B/W monitor:

0V:	Sync
0.3V:	Black
1.0V:	White
0.3-1V:	8 gray levels
Busy-signal:	Used for video mixer.

RGB to B/W (Y) convertion:

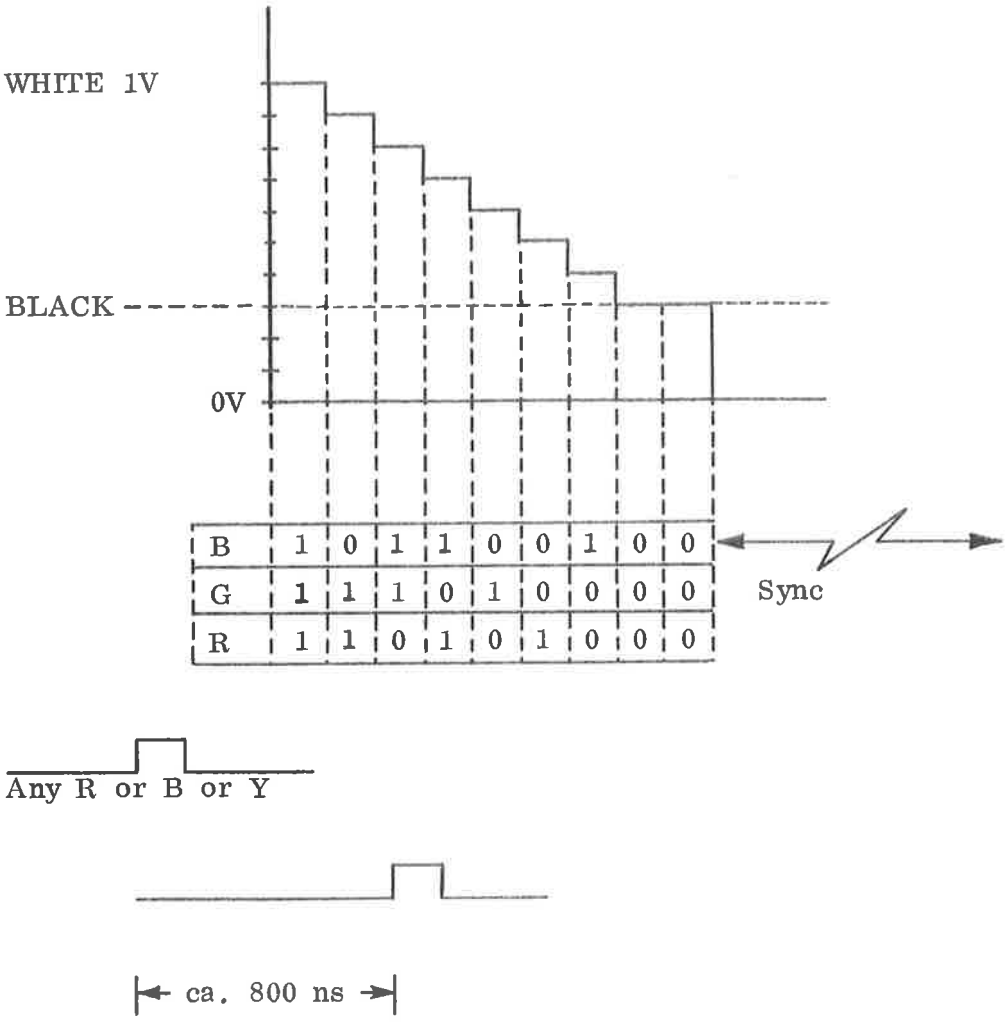

Figure 2.5.

2.3 Picture Size, Data and Colour

The format of the displayed picture is a rectangle of 256 vertical lines by 384 horizontal dots.

The lines are scanned with or without interlace (selected by hardwired strap). Either way both fields are equal to each other.

Approximately 72% of the visible frame area on a normally adjusted monitor is utilized, 90% vertically and 80% horizontally.

Input to a standard colour-monitor is the three R, G and B channels (Red, Green and Blue), plus the sync channel. These three channels (R, G, B) correspond directly to the internal NORDCOM colour setting and the lines on the main-picture bus. But since the internal information is binary, the maximum colour resolution is limited to 7 levels plus black.

These are:

R:	G:	B:	Colour
0	0	0	black
0	0	1	blue
0	1	0	green
1	0	0	red
0	1	1	cyan
1	1	0	yellow
1	0	1	mangenda
1	1	1	white

Each channel is individually adjustable on the selector-module to obtain optimal colour resolution.

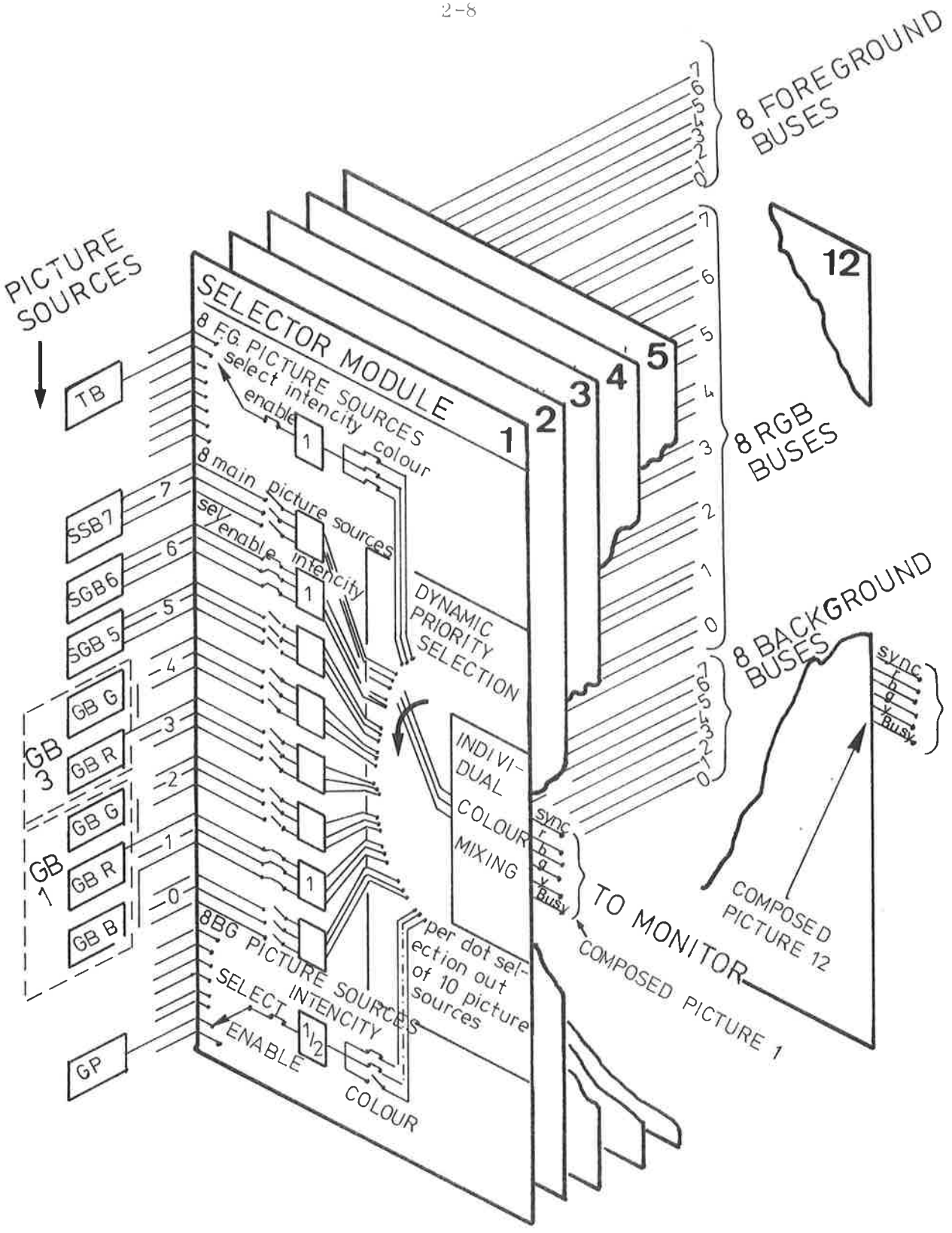

Environment of the selector module for composing of pictures from the different picture sources.
Data/control lines, etc. from the computer are not included.

3. PICTURE GENERATORS

Due to the nature of generation, the picture generators may be. may be divided into three different types: (a) program generated, (b) hardware generated and (c) externally generated pictures.

Program generated pictures means buffers which are accessable from the computer and successive scanned during refresh periode corresponding to the field scanning of the monitor.

In NORDCOM, the graphic and the semigraphic buffers are program generated generators.

Hardware generated pictures are pictures generated from a function of the current dot-position of the field scanning.

Tracker-ball marker and the grid-pattern are hardware generated pictures in NORDCOM.

Externally generated pictures from external sources like camera, Video recorder, tuner, etc. Since it is impossible to control recorders and tuners by sync, only one of such sources may be conntected at any one time, and NORDCOM must take external sync from the actual one. It is possible to control most of the available cameras by external sync form NORDCOM.

The video signal from the external sources may be digitized and conntected to the picture bus in NORDCOM.

3.1 Graphic Buffer - GB

The Graphic Buffer consists of a 16K x 6 bit refresh memory, and the contents correspond to addressable points in the picture. The serial output from the GB defines only light or no light in each point, but the colour is defined in an RGB bus.

To generate a single-colour picture, 1 buffer is required. By connecting 2 buffers, 3 colours are obtained, and by connecting 3 buffers, 7 colours are possible. See figure

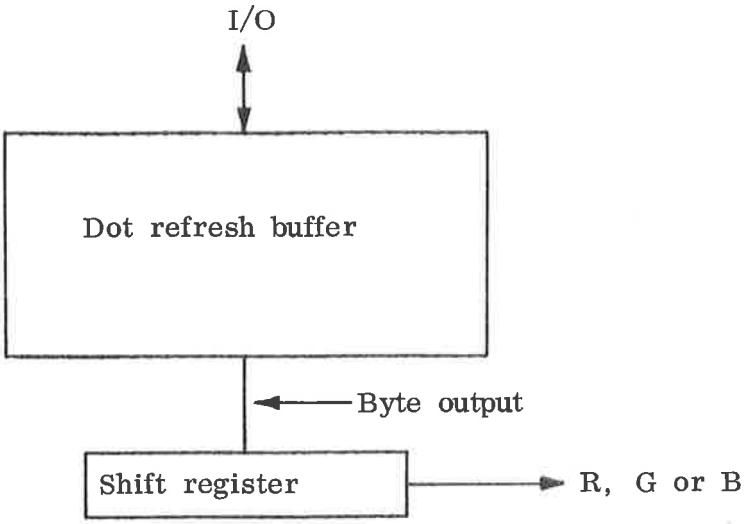

Figure 3.1: Graphic Buffer (single module) (GB)

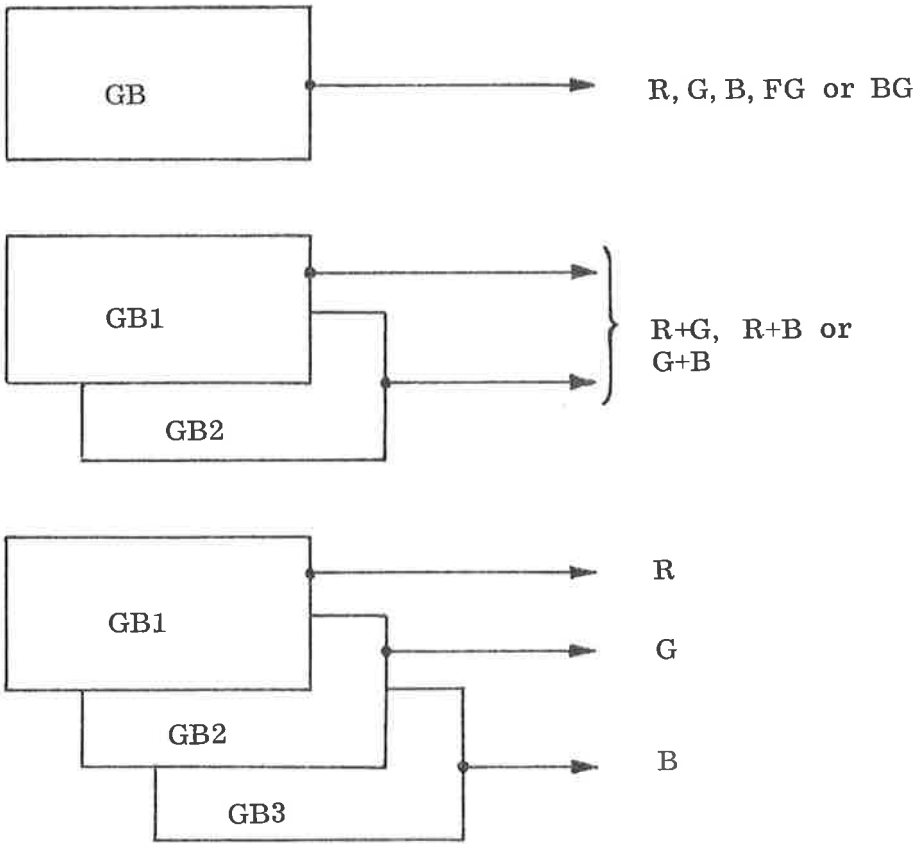

Figure 3.2: GB Organizations

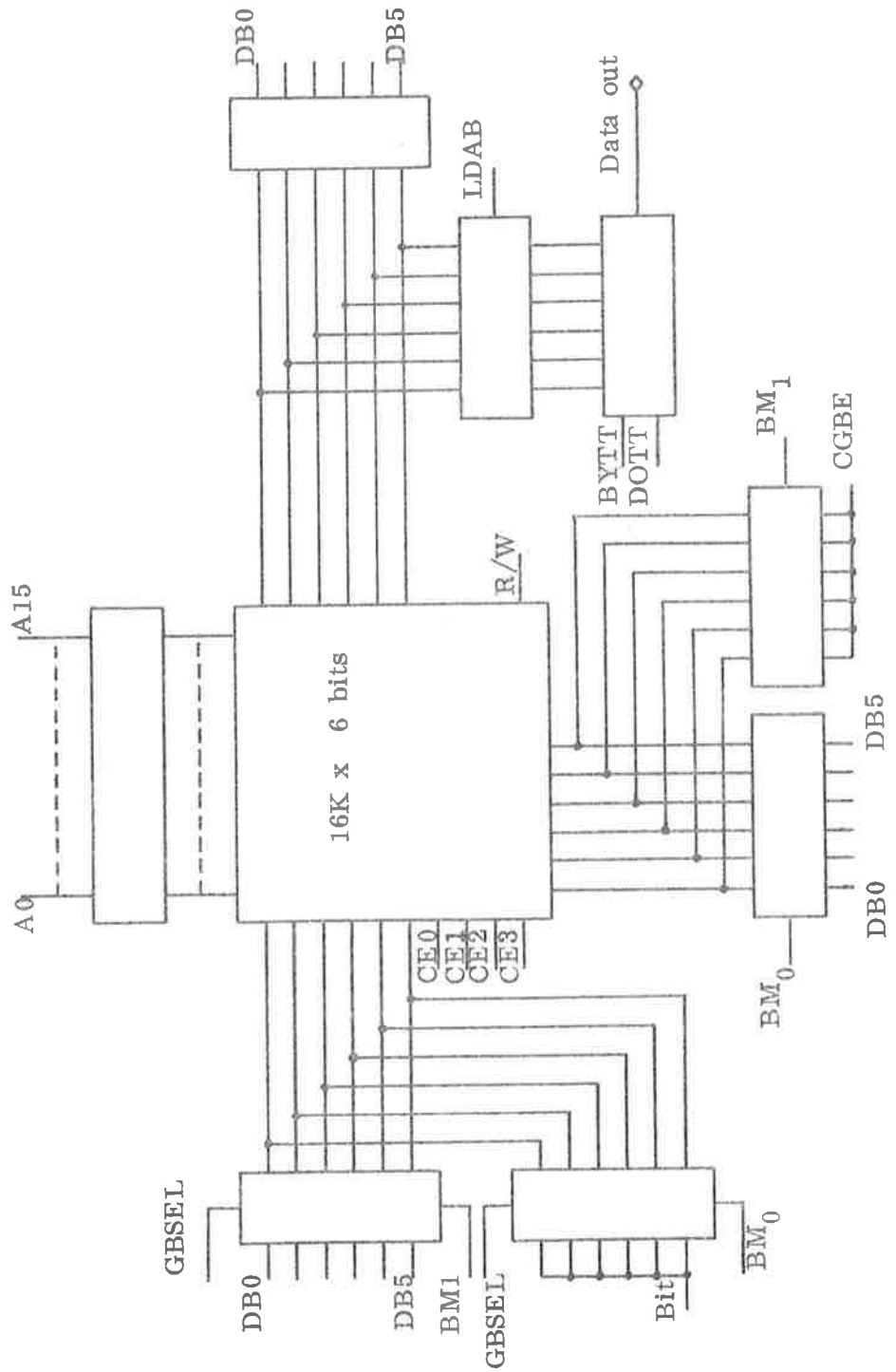

Figure 3.3: GB Module

3.2 Semigraphic Buffer (SGB)

The Semigraphic Buffer generates the main picture with maximum colour resolution per character (7 colours + black).

The SGB consists of a 4K x 12 bit refresh buffer, and a 1K x 6 bit symbol generator buffer.

The character buffer contains 128 different characters, and the buffer is writable, allowing the user to change the character set by program.

The 4K refresh buffer contains the picture information used for the frame refresh. 7 bits are used for character identification, 3 for colour, 1 for cursor and 1 for blink.

If blink bit is set, the character will blink with a frequency of 0.8 second on, 0.2 second off.

The characters are built up by a dot matrix, and may have one of these sizes:

Character box size:	Number of lines:
6 x 8	32
6 x 6	42

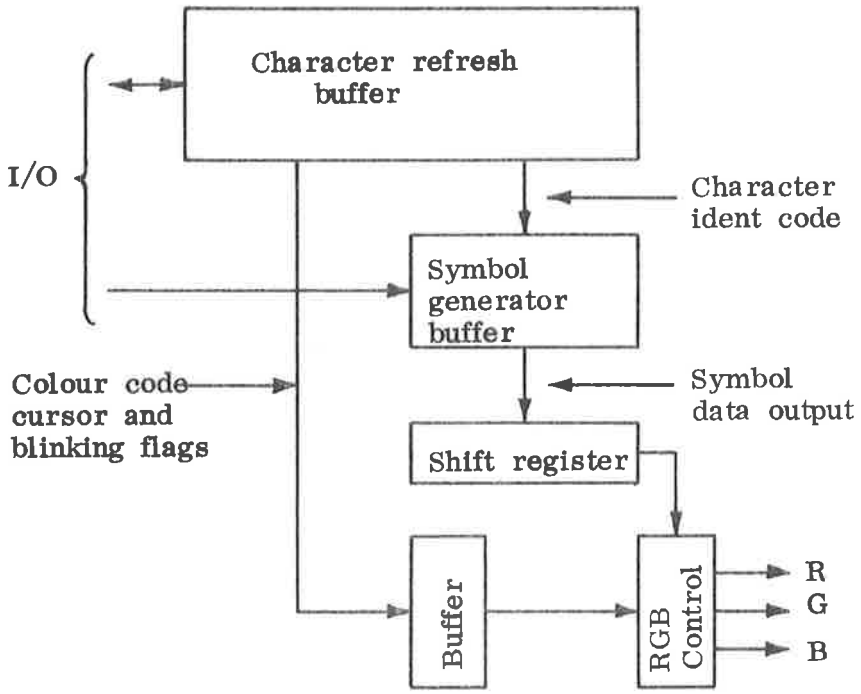

Figure 3.4: Semigraphic Buffer (SGB)

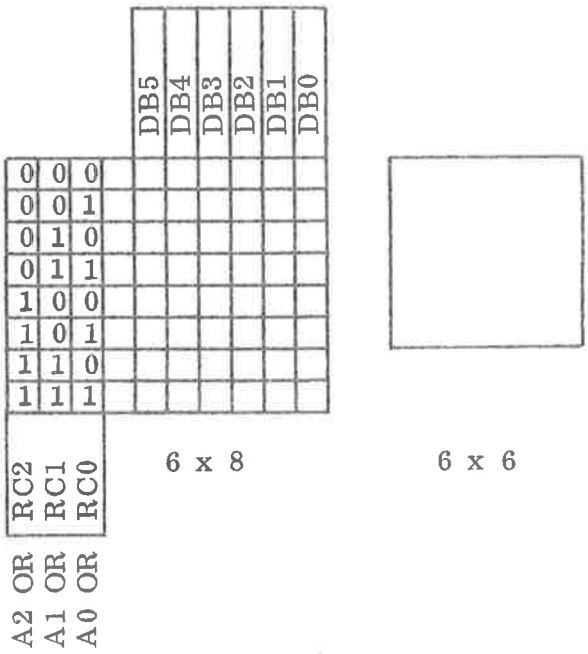

Figure 3.5: Semigraphic Character Box size

Box Size	Number of lines with 64 characters:
6 x 8	32
6 x 6	42

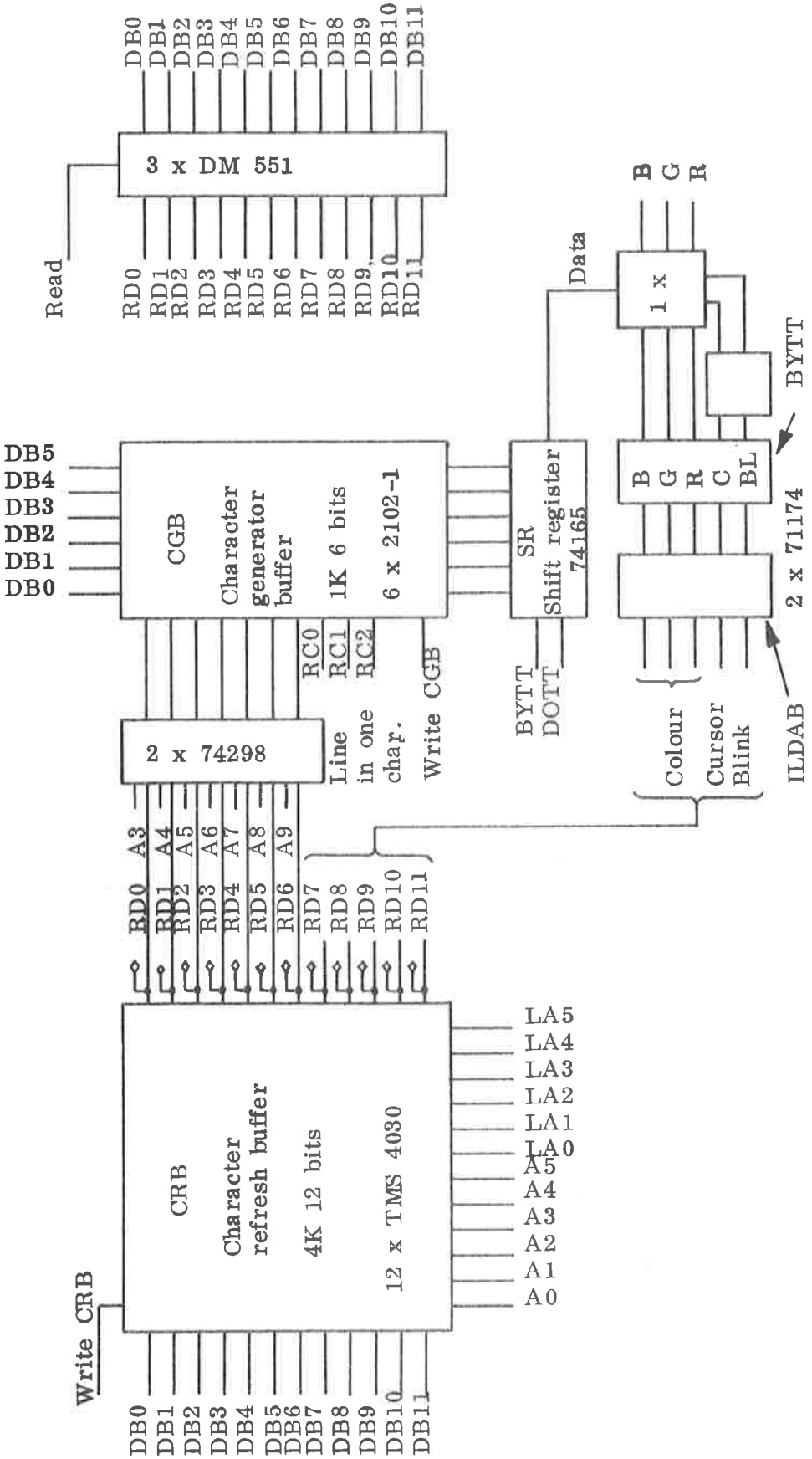

Figure 3.6: SGB

3.3 Buffer and Register Access

As standard interface between NORD computer and the NORDCOM, an ACM (Accumulator to Core Module) is used.

All communication to and from NORDCOM is transferred via this ACM. The DMA bus consists of 4 positions and the end position is for address and data buffering. One position is resumed to the bus controller and one for a vector generator. The two remaining positions are for ACM or other interfaces.

3.3.1 DMA Access

DMA-access sequencing has to start with an address set, and access (read or write) will be multiplexed according to the address.

There are 3 groups of accesses which are defined by the address bits 14 and 15.

	A15	A14	
1.	0	0	Buffer access
2.	1	0	Vector generator access
3.	1	1	Register access.

3.4 Buffer Access

To get access to all refresh buffers and symbol generators, it is necessary to have an address range greater than 16 bits.

To perform this, a 6 bits register (bank register) is introduced, which points to the specified buffers. See figure below.

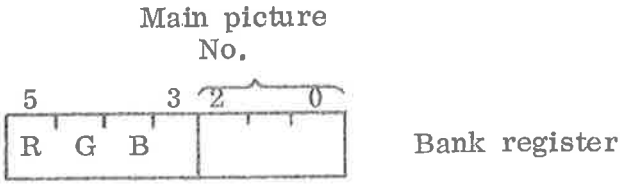

Bank register

Bit No.:

5	4	3	
0	0	0	Access to SGB
1	0	0	Access to GB red

Bit No.: 5	4	3		
0	1	0	Access to GB green	
0	0	1	Access to GB blue	
1	1	0	Access to red and green	Actual only at write access
1	0	1	Access to GB red and blue	
0	1	1	Access to GB green and blue	
1	1	1	Access to GB red, green and blue	access

Buffer position	When GB Bank		When SGB Bank	
1	15	FG/BG 4 B5		
2	25	FG/BG 5 G5		
3	17	FG/BG 6 B7		
4	27	FG/BG 7 G7		
5	47	R7	07	RGB 7
6	13	B3	06	RGB 6
7	45	R5	05	RGB 5
8	23	G3	04	RGB 4
9	43	R3	03	RGB 3
10	21	G1	02	RGB 2
11	41	R1	01	RGB 1
12	11	B1	00	RGB 0

Figure 3.7: Bank to Buffer Relations

3.4 Buffer Access

GB address range: $0 - 37777_8$

SGB address range: $0 - 7777_8$

SGB address range for the character generator buffer: $20000 - 21777_8$

The address bits 0 - 2 specify the row in one character, and bits 3 - 9 the character.

Buffer access format

Grafic Buffer

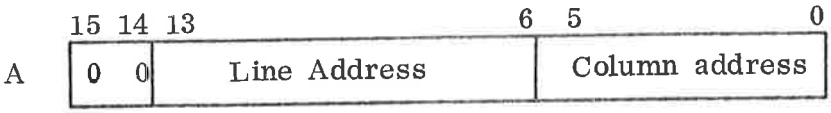

SGB: Character buffer

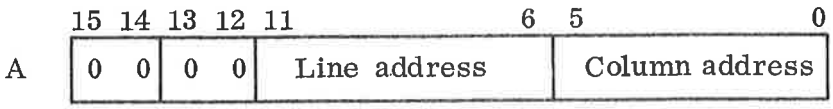

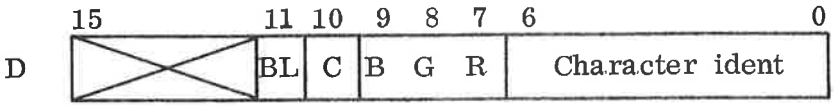

SGB: Character generator

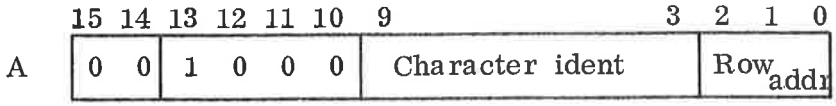

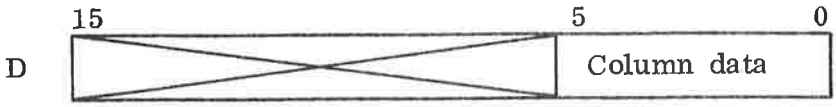

A: Address
D: Data

Figure 3.8.

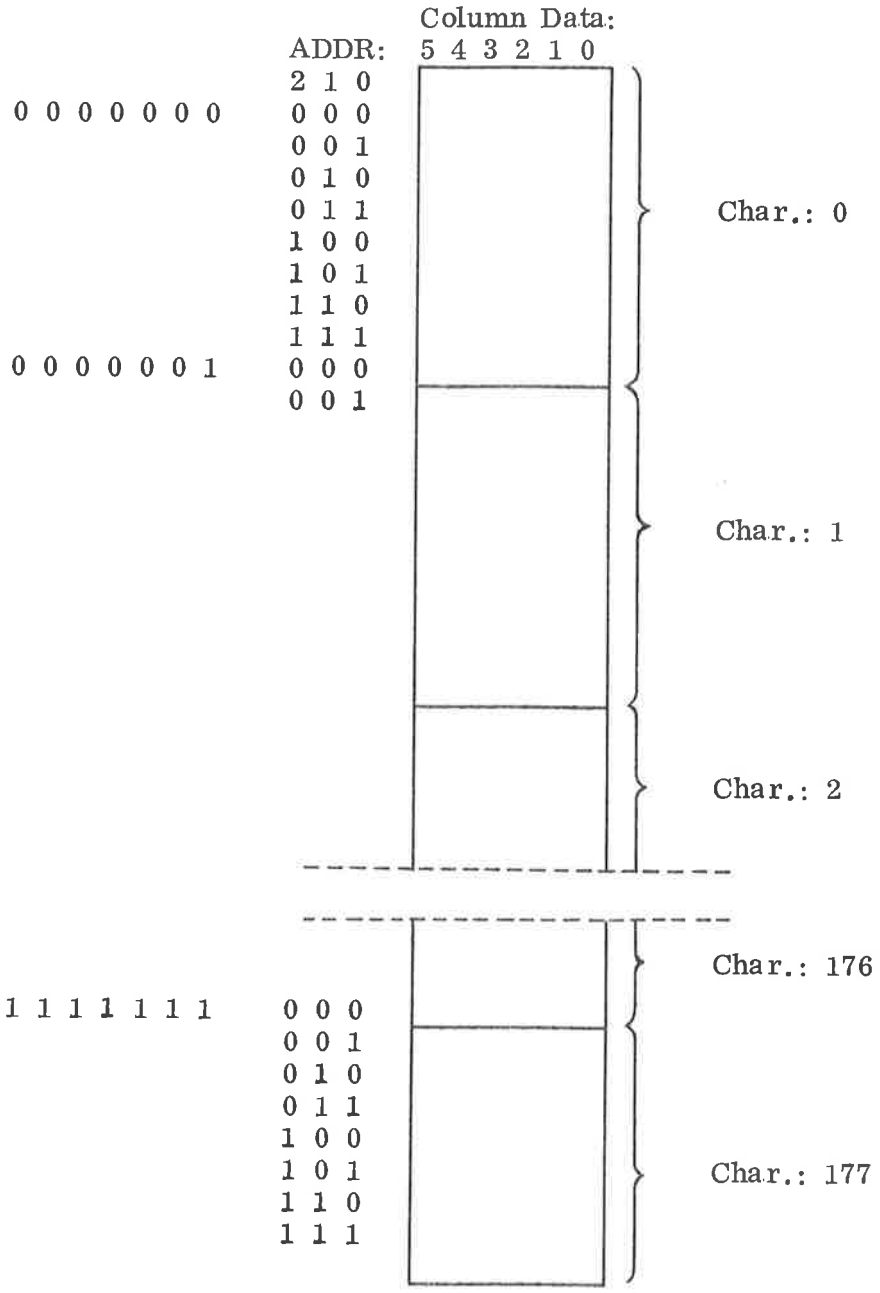

Figure 3.9: Organization of Character Generator Buffer

Example:

SGB Address Buffer: Bit (0-5) Horizontal character address
Bit (6-11) Vertical character line address

Address: 200 =

11	10	9	8	7	6	5	4	3	2	1	0
0	0	0	0	1	0	0	0	0	0	0	0

Vertical address — Horizontal address

Vertical address = 2
Horizontal address = 0

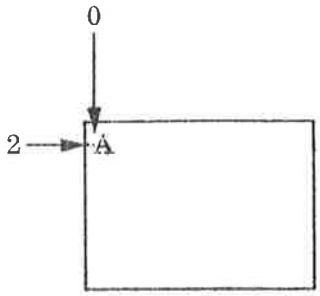

Data Buffer:

Bit (0-6):	Character ident
Bit 7:	Red colour
Bit 8:	Green colour
Bit 9:	Blue colour
Bit 10:	Cursor flag
Bit 11:	Blinking flag.

Character buffer data = 301 =

11	10	9	8	7	6	5	4	3	2	1	0
0	0	0	0	1	1	0	0	0	0	0	1

Character ident

Character ident: 101_8 = A (ASCII code)
Bit 7 = 1 = red colour.

With the address = 200, Buffer data = 301, the SGB will generate a red A in the top left hand corner (Horizontal address 0, vertical address 2).

3.5 Vector Generator Access

Figure 3.10 shows the vector generator format.

Initialization of vector generation:

- Set Bank register
- Set address and colour: 100000 + bit (13, 12, 11) → RGB
- Set parameters: X. Y. $\triangle$X. $\triangle$Y. S (Start flag).

The reference point of the parameters "X" and "Y" is on the bottom lefthand corner onthe picture (origo). "X" specifies the horizontal dot addresses 0 - 577_8 (Left most position = 0).

"Y" specifies the vertical addresses from 0 - 377_8 (bottom position = 0).

"$\triangle$X" and "$\triangle$Y" specify movements of points and lines, and may have positive and negative values (Bit 9 = sign bit).

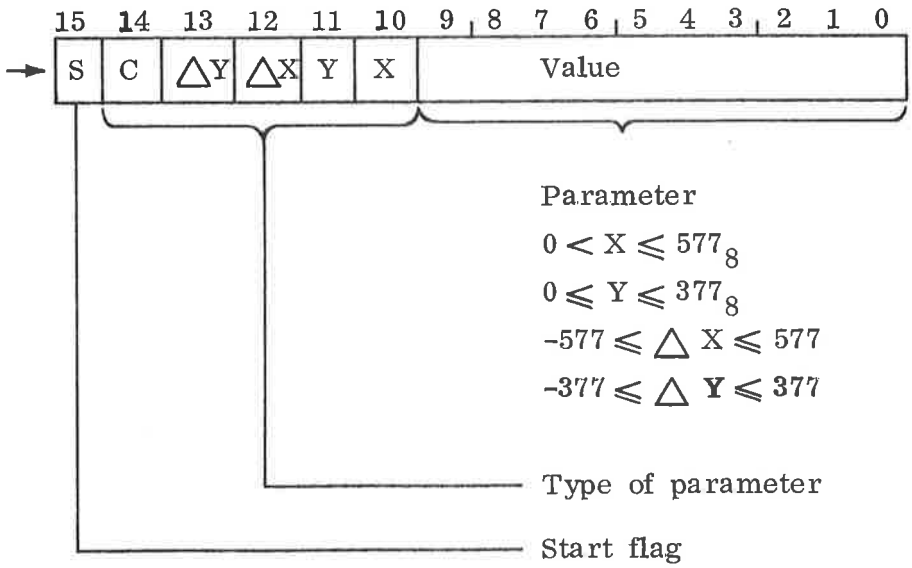

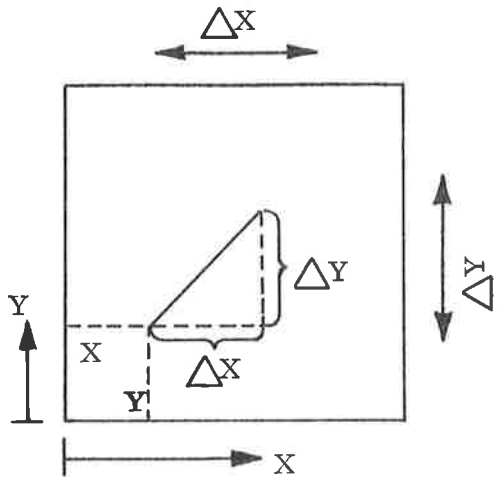

Figure 3.10: Vector Generator Format

Example: Sequence for vector generator in graphic main picture No. 5.

1. Set Bank register
2. Write 75 in Bank register (enable all colours in MP5).

Red dot in X/Y = 157/360

1. Set VG address + 2000 (red)(120000 → address)
2. Write 157 + "X" (002157)
3. Write 360 + "Y" + START (104360).

Green line from 200/120 to 230/020

1. Set VG address + 10000 (green) (110000 → address)
2. Write 200 + "X" (002200)
3. Write 120 + "Y" (004120)
4. Write +30 + "△X" (010030)
5. Write -100 + "△Y" + START (121700).

3.6 Register Access

Accessible registers:

1.	Bank register	W
2.	FG register	R/W
3.	BG register	W
4.	Composer (SM and CCM)	W.

3.6.1 Bank Registers

Address = 140000_8.

Data bits 0 - 2 specify the main picture (MP), and bits 3 - 5 the colour for GB access.

3.6.2 FG Registers

Address = 172000 + (FG No.) * 2

If tracker ball is used, the X and Y coordinates specify where on the picture the upper lefthand corner of the tracker ball is. See fig. The reference and format of X and Y is similar to the vector generator.

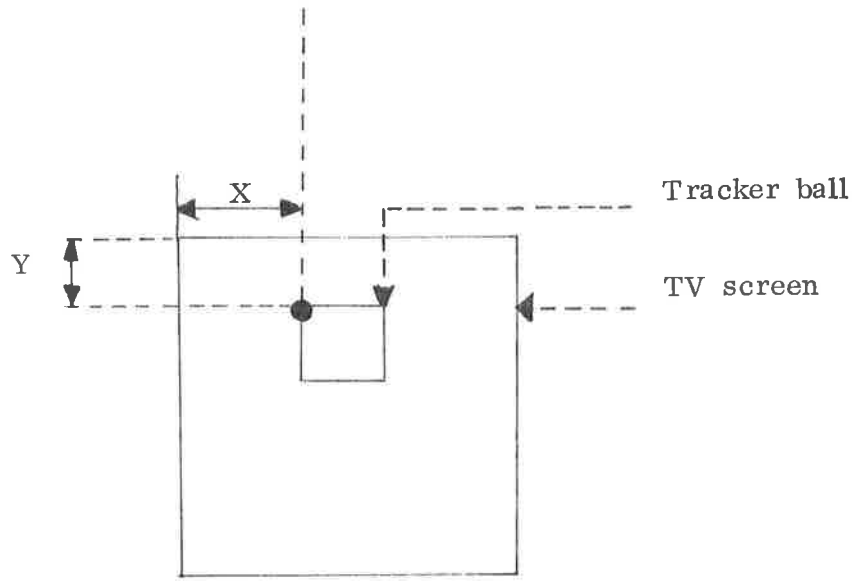

3.6.3 BG Register

Address = 174000 + (BG No.) * 2.

3.6.4 Composer Register (SM and CCM)

Address = 140000 + (SM No.) * 2000 + (Sub.reg. No.)

SM No. 1 - 14_8.

One selector module has 4 registers, and address bits (0 - 1) specify these registers:

00: Enable registers for MP
01: Intensify registers for MP
10: Foreground registers
11: Background registers.

Bits 10 - 13 specify the module number which is equal to the output number of the monitor.

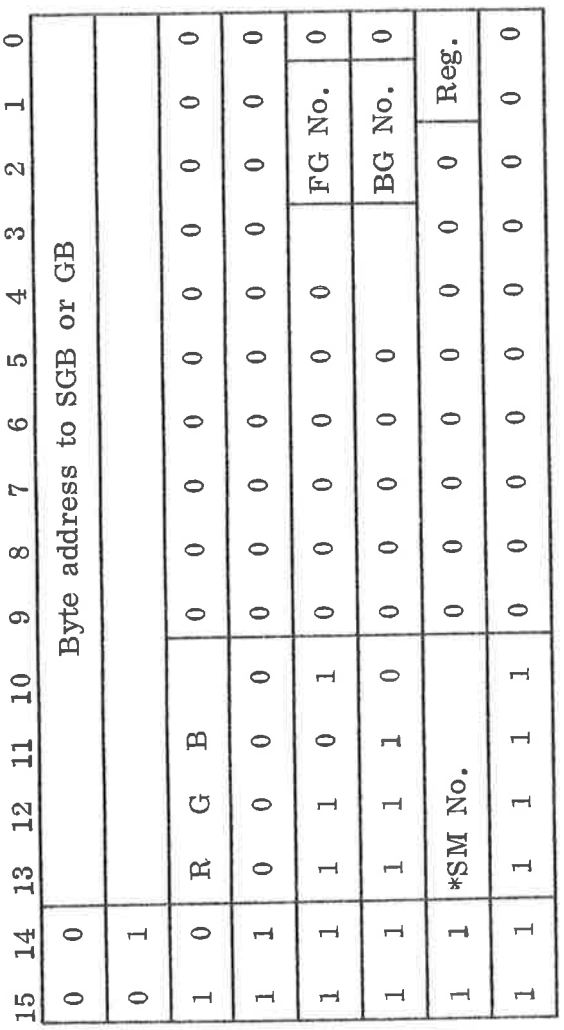
15 14 13 12 11 10 9 8 7 6 5 4 3 2 1 0
0 0 Byte address to SGB or GB
0 1
1 0 R G B 0 0 0 0 0 0 0 0 0 0 0 0
1 1 0 0 0 0 0 0 0 0 0 0 0 0 0 0
1 1 1 1 0 1 0 0 0 0 0 0 0 FG No. 0
1 1 1 1 1 1 0 0 0 0 0 0 0 BG No. 0
1 1 *SM No. 0 0 0 0 0 0 0 0 0 0 Reg.
1 1 1 1 1 1 0 0 0 0 0 0 0 0 0 0
Buffer access
Spare
Vector generation access
Bank register
FG register
BG register
SM or CCM access
Modus register
*SM No.: 0001 - 1100

Figure 3.11

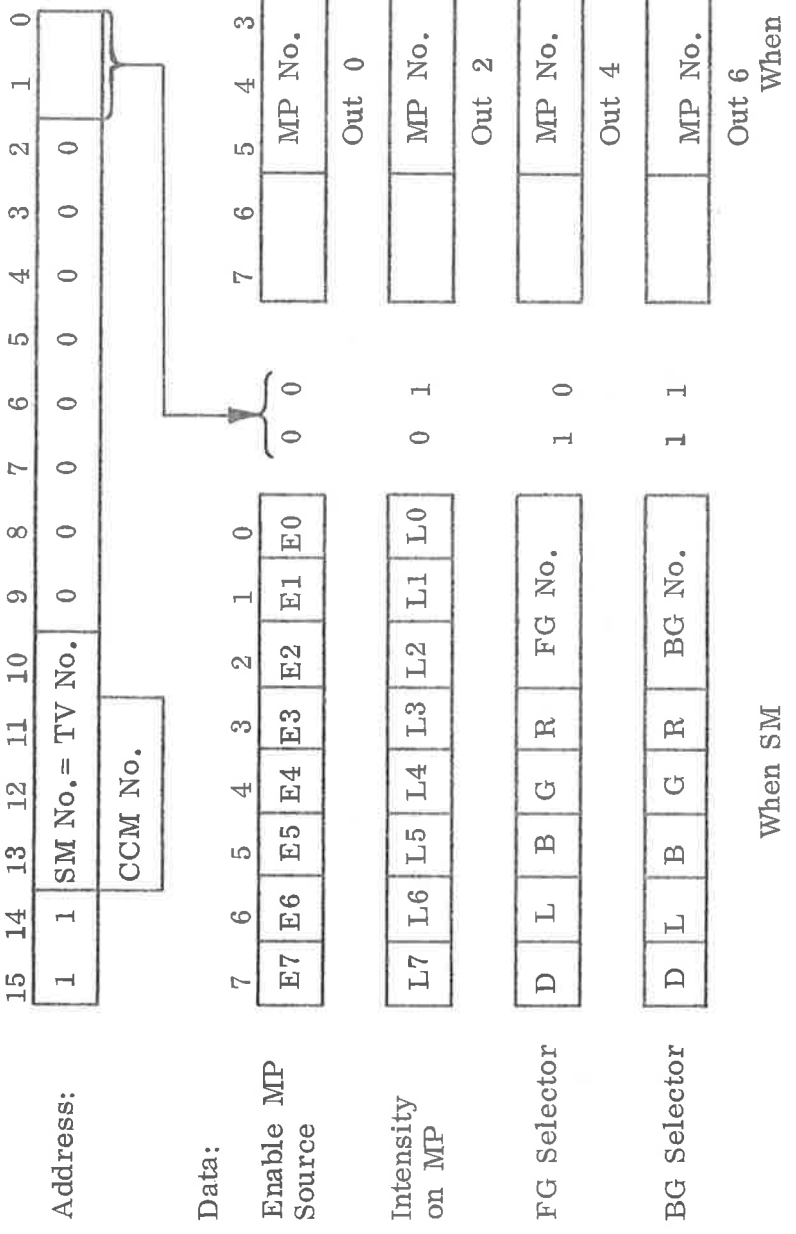
Address:
15 14 13 12 11 10 9 8 7 6 5 4 3 2 1 0
1 1 SM No.= TV No. 0 0 0 0 0 0 0 0 0 0
CCM No.
Data:
7 6 5 4 3 2 1 0
Enable MP Source
E7 E6 E5 E4 E3 E2 E1 E0
0 0
Intensity on MP
L7 L6 L5 L4 L3 L2 L1 L0
0 1
FG Selector
D L B G R FG No.
1 0
BG Selector
D L B G R BG No.
1 1
When SM
7 6 5 4 3 2 1 0
MP No. MP No.
Out 0 Out 1
MP No. MP No.
Out 2 Out 3
MP No. MP No.
Out 4 Out 5
MP No. MP No.
Out 6 Out 7
When CCM
D: Disable FG or BG
L: Intensity on FG or BG
RGB: Colour on FG or BG

Figure 3.12.

4. ORGANIZATION OF PICTURE SOURCES

A maximum of 14 picture sources may be mixed:

1 position for FG
1 position for BG
4 buffer positions for GB
8 buffer positions for GB or SGB.

- The FG and BG positions are permanently connected (in the backwiring) to give the first (0-3) foreground and background pictures.

- The first 4 buffer positions are decided only for GB and are connected to give foreground, background and one colour for a main picture. See figure. 4.1.

- The next 8 buffer positions are decided for SGB or GB.

- One SGB module generates a complete main picture.

- One GB module generates the colour for a main picture.

If all buffer positions are used by GB, the wiring is organized to give information to main picture 7, 5, 3, 1.

This will give a flexible priority system in mixing of GB and SGB as main sources.

The selection of GB as foreground, background or main picture, is done by a strap function in the backwiring.

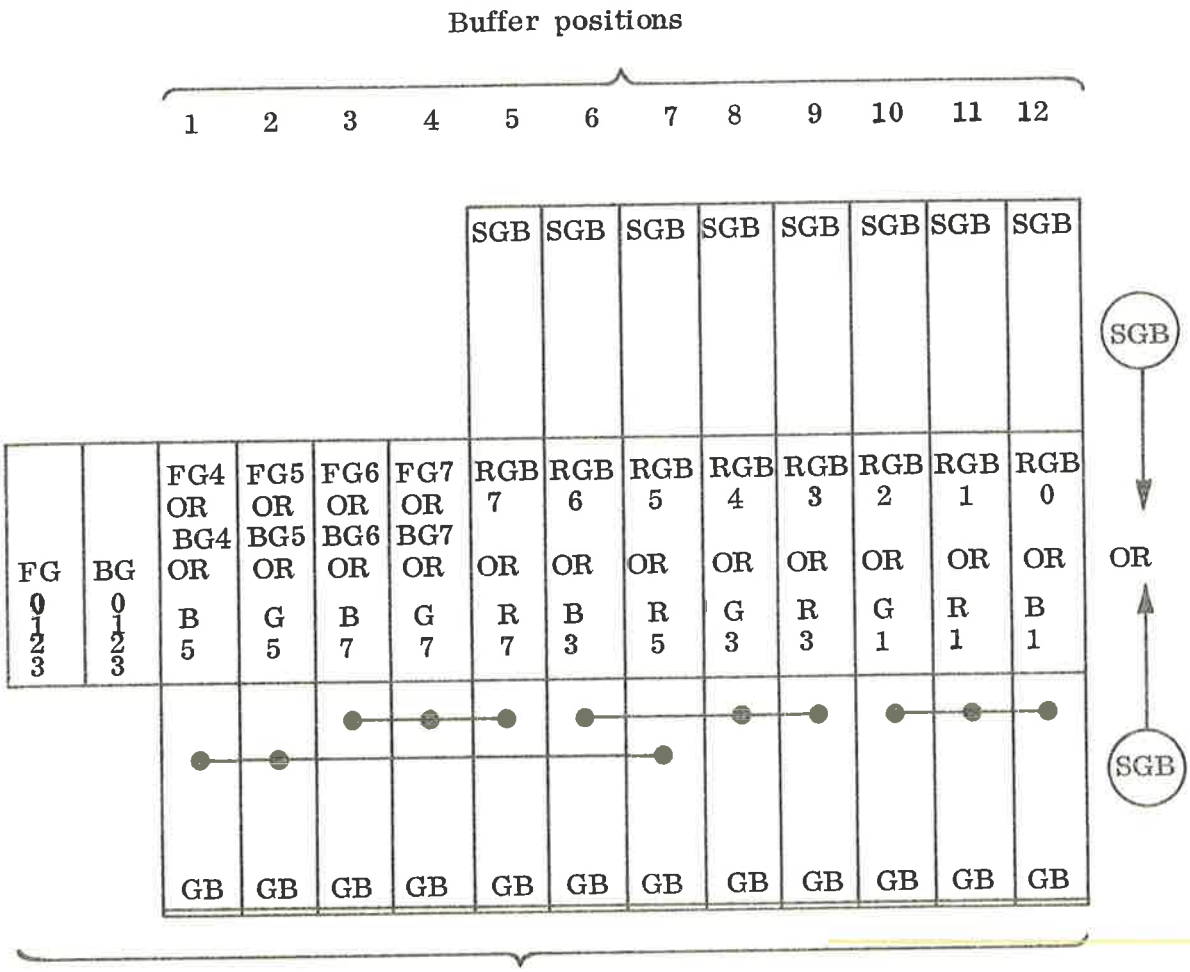
Buffer positions
1 2 3 4 5 6 7 8 9 10 11 12
SGB SGB SGB SGB SGB SGB SGB SGB
SGB
FG 0 1 2 3
BG 0 1 2 3
FG4 OR BG4 OR B 5
FG5 OR BG5 OR G 5
FG6 OR BG6 OR B 7
FG7 OR BG7 OR G 7
RGB 7 OR R 7
RGB 6 OR B 3
RGB 5 OR R 5
RGB 4 OR G 3
RGB 3 OR R 3
RGB 2 OR G 1
RGB 1 OR R 1
RGB 0 OR B 1
OR
SGB
GB GB GB GB GB GB GB GB GB GB GB GB
Picture element source positions

Figure 4.1.

5. TIMING

5.1 Picture Scanning

Every picture generated in NORDCOM is scanned with both fields equal. This is regardless of interlaced or nor interlaced field-scanning mode.

The scanning is not normally interlaced, but the interlace mode is simply selected by a wiring-strap.

It is necessary to select the interlaced mode, if fully vertical resolution on external videos is wanted. However, the non interlaced scanning mode makes a more stable picture to look at.

5.2 Sync Timing

The sync output from NORDCOM is standard CCIR composit sync, or composit video (B/W) when Y-channel is used.

When not interlaced mode, the number of lines per field is 313, elsewhere the number is 312 1/2.

External composit sync, composit video or separate horizontal and vertical sync may be applied to the NORDCOM, and the sync timing will automatically be referred to this.

5.3 Internal Synchroneous Timing

The internal source of timing is an 18 MHZ X-tal called "OSC" (see diagram 2B73 and 3B05).

External or internally generated sync is sampled and locked to this 18 MHZ. The "OSC" divided by 2 makes the dot-timing "DOTT".

The displayed picture is determined by the window: "HFRAME" x "VFRAME". "HFRAME" contains 384 DOTT cycles, "VFRAME" contains 256 successuve "HFRAME"'s.

Due to the need for continuous refresh-access for the dynamic memory-elements in the buffers, the buffer access scanning is also done outside the picture window.

Between two "HFRAME"'s there is approximately 14μs available for I/O access to the buffers.

5.3 I/O Timing (Asynchronous)

All I/O Accesses are executed between two "HFRAME"'s controlled by the state of "BREAK" off.

The timing of each access-cycle from ACM via DMA-bus to the buffer-bus is shown in diagram 2B72.

5.5 Signal Description (See diagram 2B73)

OSC:	18 MHZ X-tal frequency
DOTT:	DOT Timing = OSC/2
BC:	Bit counter, counting to six by counting 2-3-4-5-6-7-2--------
CRY:	Carry from bit counter
CLK:	CRY . OSC_0 (end of BYTE)
BYTT:	Byte timing (from CRY)
LDAB:	Load A-buffer on SGB and GB (from CRY)
CAINCR:	Increment Common Address Counter (from CRY)
CGBE and CRBE:	Common Refresh-Buffer-Enable, timing to CE on all buffers. Generated from BC2 = 1.
SYNC:	External - or Internal - Composite Sync, (EXCOMP or ICOMP) sampled by "OSC".
START:	Start line processing, switched on by trailing edge of sync, and off by end of display period of the line.
DSTART:	"START" synchronized by OSC.
MC:	Margin counter
LHALF:	Left half of the line
4 μs through 20 ms:	Outputs from all counters to generate the internal composite sync, according to the CCIR-normals.
BUSY:	First phase of line period . Also signal to stop I/O transfer.
CRBEEN:	Enable CRBE to the buffers
BYTTEN:	Enable BYTT
HFRAME:	Enable display of dots
BREAK:	Stop I/O transfer
CA:	Common address counter

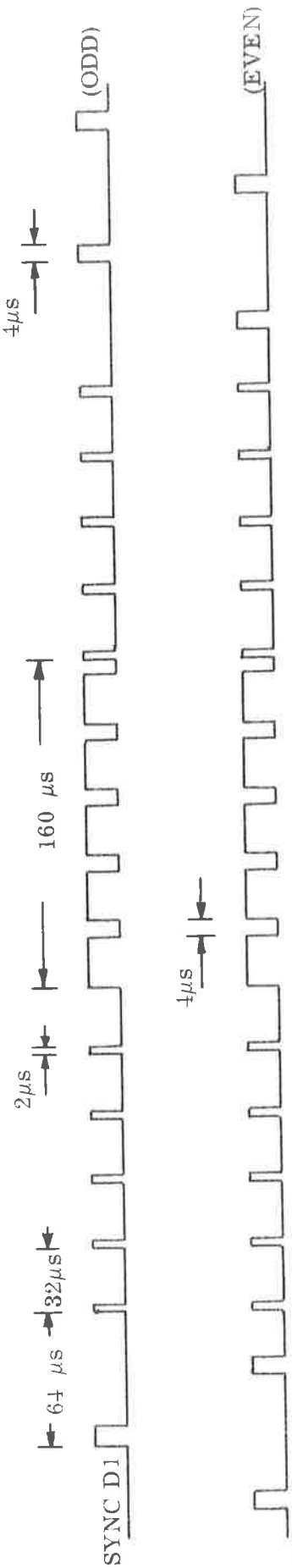

Figure 5.1

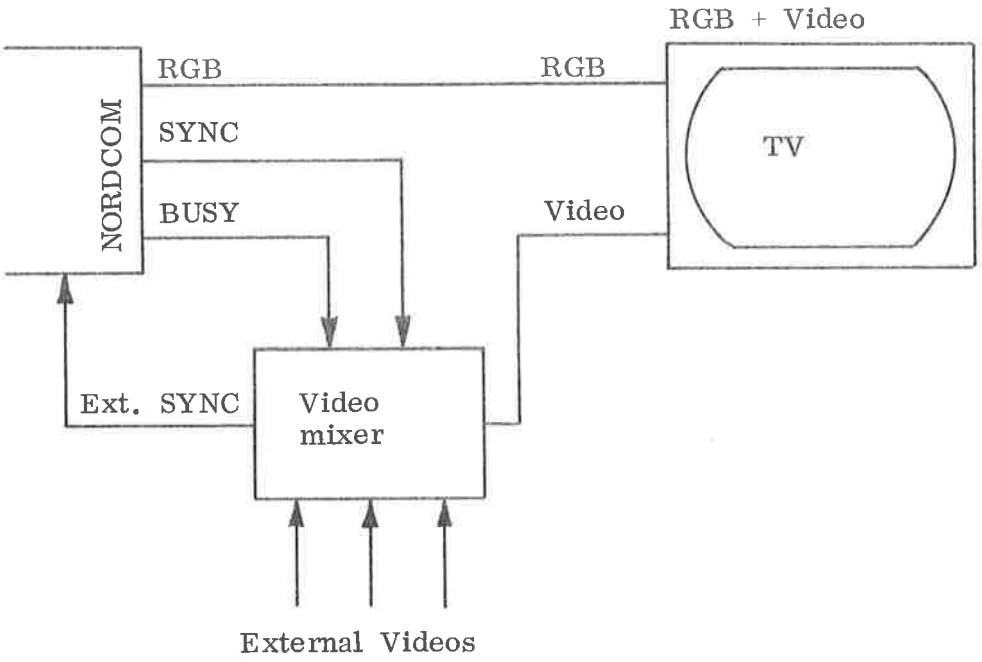

Figure 5.2: Video Mixing

ACM TIMING:

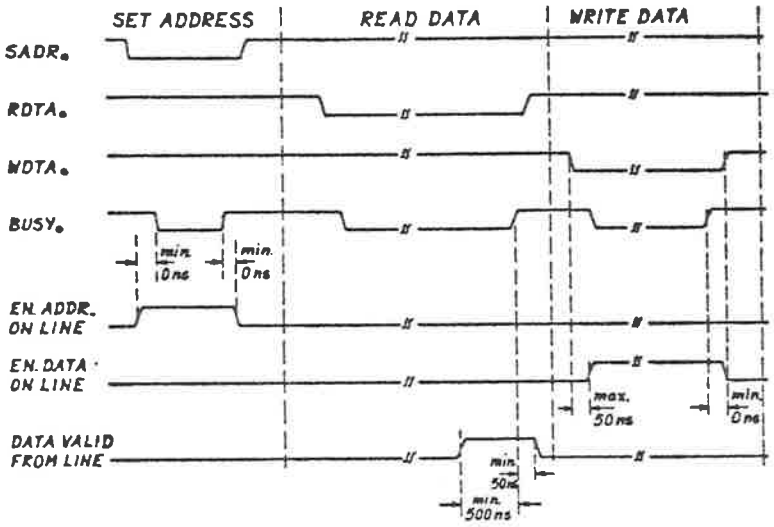

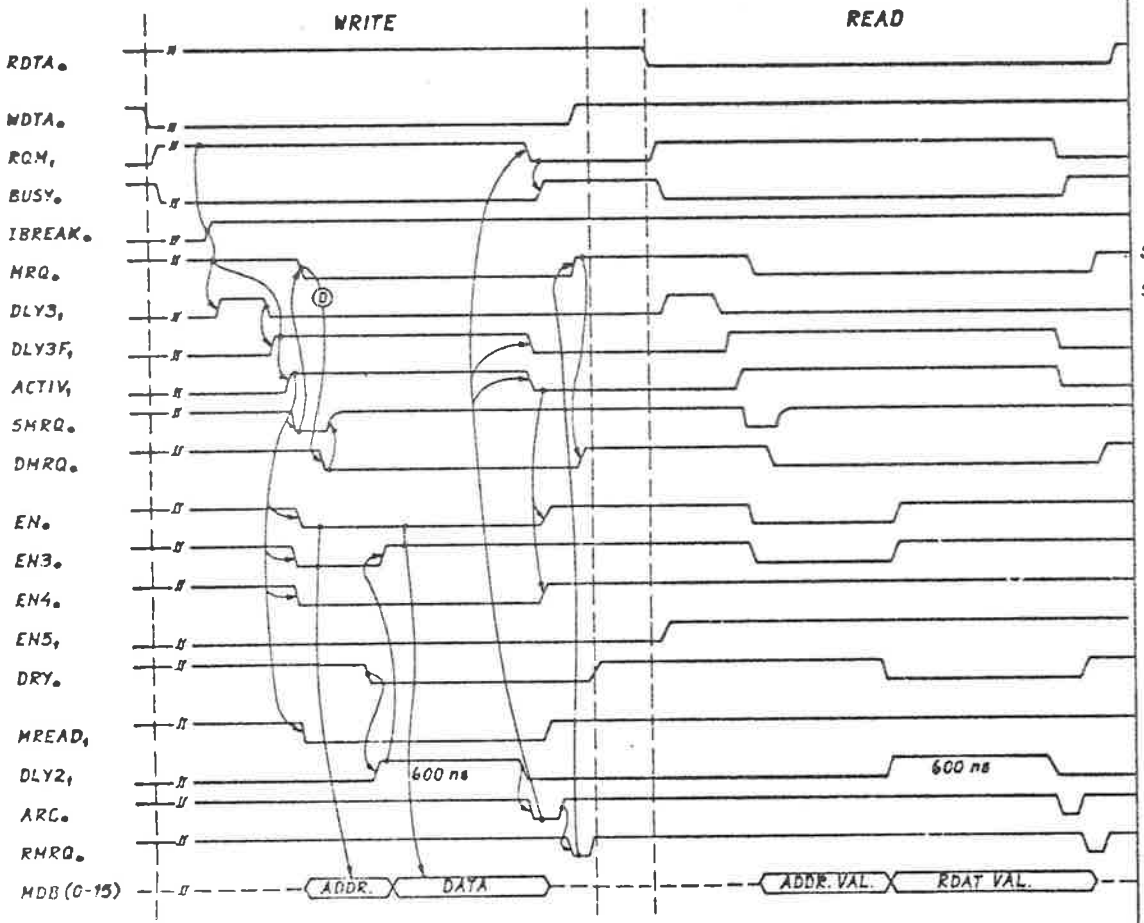

BUFFER OR REG. ACCESS (A15-A14) 200 ns/cm

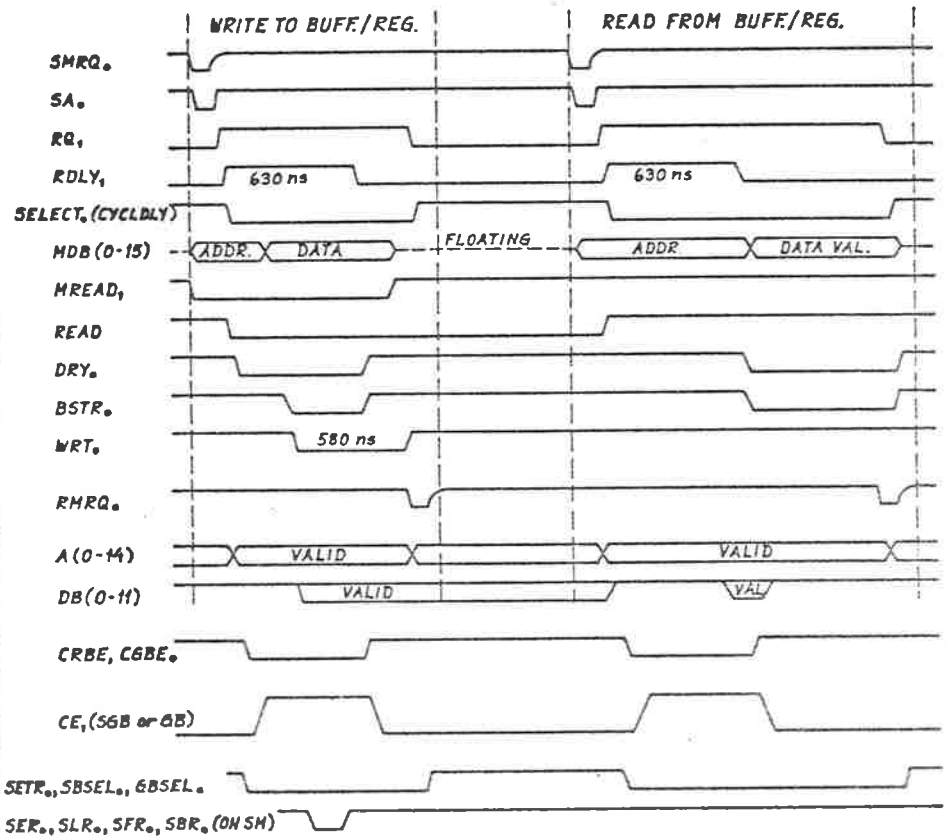

5-5

Rettet	Dato	Sign.
NORDCOM - 74 ASYNCHR. (I/O) TIMING	Målestokk	Tegn Eml 28.11 Kontr IB Appr.
A/S NORSK DATA-ELEKTRONIKK		2872

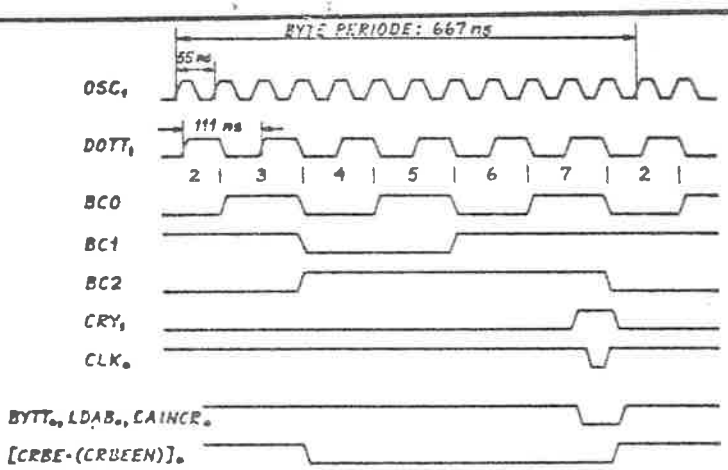

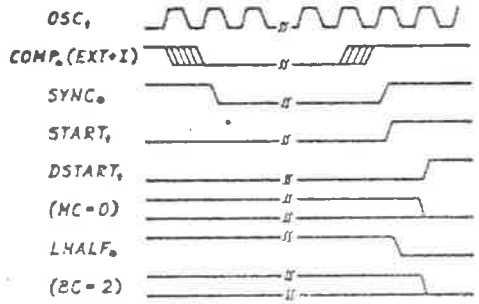

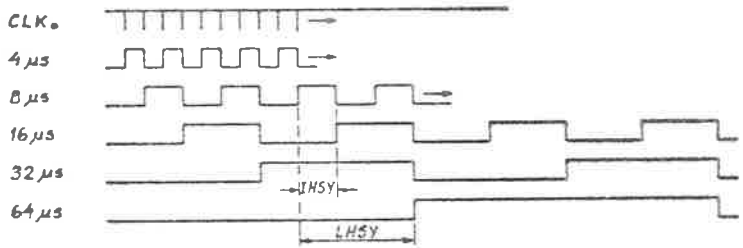

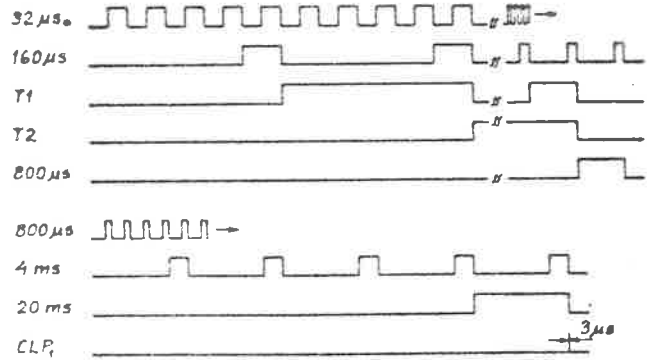

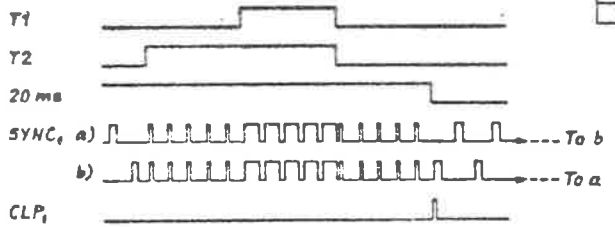

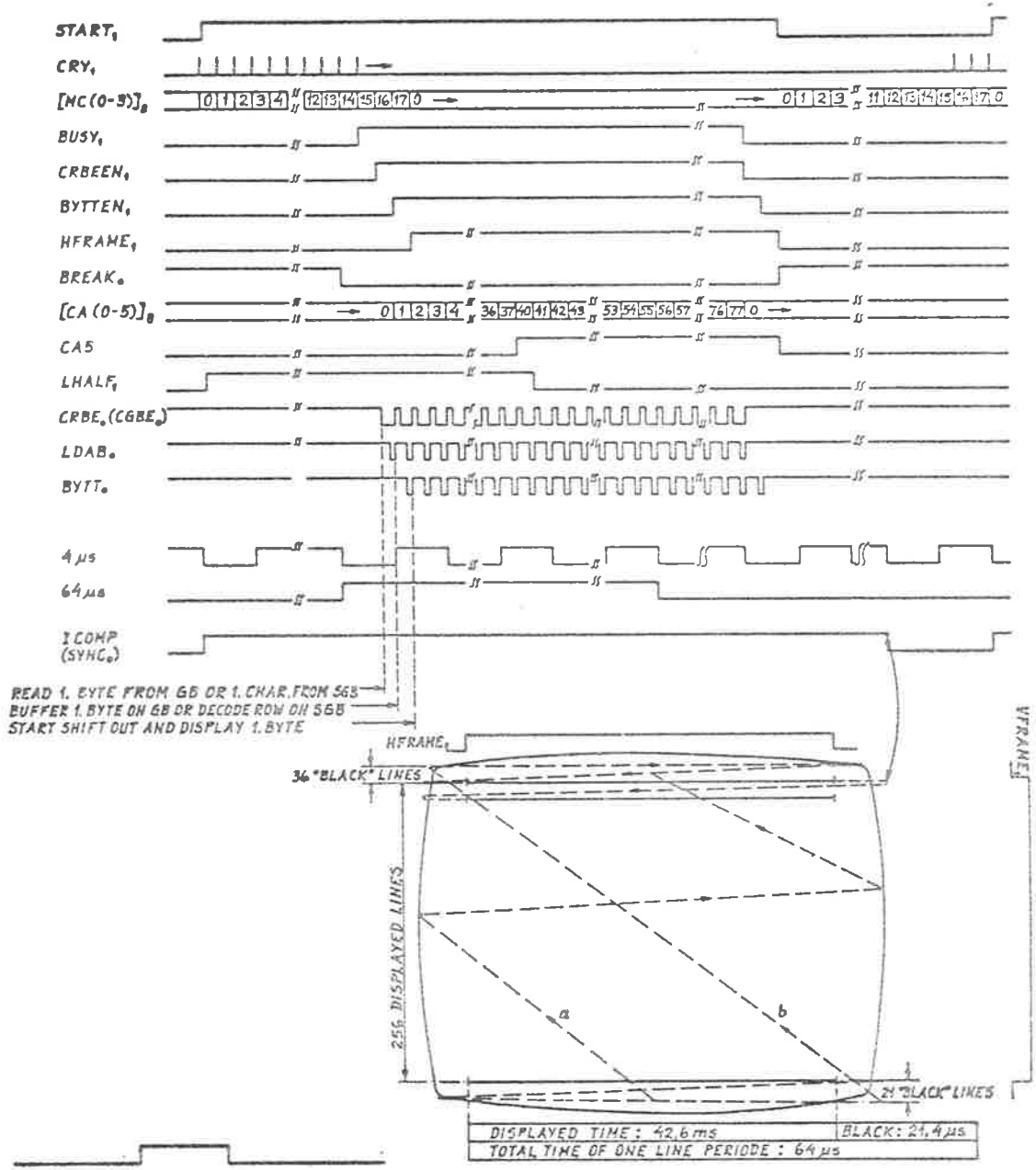

Rettet	Dato	Sign
NORDCOM-74 SYNCHRONOUS TIMING	M Skeltoos	Tegn. Godk. 29.4 Kontr. IB Appr.
A/S NORSK DATA-ELEKTRONIKK	2873	

APPENDIX A

NORDCOM TESTMONITOR

```
THIS IS YOUR NORDCOM TESTMONITOR VERTION: I OCT. 26. -74

IF YOU WANT A SHORT REVUE OF THE AVAILIBLE COMMANDS, KEY "Y"
IF NOT, KEY: "N"
Y
00...CLEAR      01...SET ADDR   02...WRITE      03...READ
04...SET SM     05...SET BANK   06...FILL SYMB  07...DEF.SYMB
10...SINGL CH   11...NEXT CH    12...FILL CH    13...FILL GB
14...ACM DVN.   15...PRNT DVN   16...PRNT NO    17...COPY NO
20...TEST ACM   21...TST BUFF   22...INV.CON.   23...TEST ALL
24...DUMP       25...W+R        26...INFO       27...NSTART
30...TST OLD

31-77: NOT IMPLEMENTED

MORE INFORMATION?  "Y" OR "N"
Y
THE COMMAND IS TO BE SPECIFIED BY WRITING THE COMMAND-NUMBER
AND (IF NESSESARY) THE PARAMETERS DELIMITED BY ",", LIKE:

XX,P1,P2,.........,P(N)      (N: MAX 17)

ALL PARAMETERS ARE TO BE GIVEN IN OCTAL VALUE.

THE COMMAND IS EXEQUTED BY "CR", OR EREASED BY "CONTR.Q"

"S" OR "L" IN FRONT O FTHE COMMAND SPECIFIES SINGLE OR LOOPED
COMMAND EXEQUTION

IF YOU WANT MORE INFORMATION ON A PARTICULAR COMMAND
JUST WRITE THE COMMAND-NUMBER AND "I"

EXAMPLE:  INFO ABOUT COMMAND:11, WRITE:  11I


THE MONITOR IS READY FOR COMMAND WHEN "*" IS PRINTED

*0I
00     (NO PARAMETERS)
       CLEAR DEVICE(ACM) AND NORDCOM

*1I
01,[ADDRESS]
       SET ACM ADDRESS
```

```
♦2I
02,[DATA],[LOW.ADDR.],[UPP.ADDR.]
      WRITE DATA ON ACM FROM LOW. TO UPP.
      FOR SINGLE, SPECIFY LOW. ONLY

♦3I
03,[LOW.ADDR.],[UPP.ADDR.]
      READ FROM ACM AND PRINT RESULT
      FROM LOW. TO UPP.
       NO PRINTOUT WHEN "L"

♦4I
04,[SM NR.],[EN.REG.],[LEV.REG.],[FG REG.],[BG REG.]
      SET SELECTORMODULE

♦5I
05,[BANK]
      SET BANK

♦6I
06,[BANK],[TAB.NR.]
      FILL CHARACTER-GENERATOR-BUFFER ON SGB
      TAB.NR. 0 :  ALL ZERO
      TAB.NR. 1 :  64 ASCII + 64 GRAPH. SYMBOLS

♦7I
07,[BANK],[CHAR.IDENT],[ROW0-1],[ROW2-3],[ROW4-5],[ROW6-7]
      (RE)DEFINE SYMBOL ON SGB
      ROW0-1 MEANS ROW0+100♦ROW1

♦10I
10,[BANK],[CHAR.ADDR.],[CHAR.DATA]
      SET SINGLE CHARACTER IN
      CHAR.BUFFER ON SGB

♦11I
11,[CHAR.DATA]
      SET SINGLE CHARACTER IN NEXT
      BUFFER ADDR. ON SGB SPECIFIED
      BY "10"

♦12I
12,[BANK],[PATT.ADDR.]
      FILL CHAR.BUFFER ON SGB
      WITH CHAR. PATTERN
      PATT.NR. 0 :  ALL ZERO
      PATT.NR. 1 :  ALL POSSIBLE SYMBOLS

♦13I
13,[BANK],[PATT.NR.],[ZERO PATT]
      FILL GB
      PATT.NR. 0 :  ALL ZERO OR PATT. SPECIFIED BY ZERO PATT.
      PATT.NR. 1 :  COLOUR SCALE
```

```
*14I
14,[DEV.NR]
      (RE)DEFINE DEVICENR. FOR ACM
      ONLY THE LOWER DEV.NR. HAS TO BE SPECIFIED
      STANDARD DEN.NR FOR ACM IS: 40

*15I
15,[DEV.NR]
      (RE)DEFINE DEVICE NUMBER FOR PRINTOUT
      ONLY THE LOWER DEV.NR HAS TO BE SPECIFIED
      STANDARD DEV.NR IS: 304 (TTY-1)

*16I
16,[BANK],[SM.NR]
      SPECIFY PRINTOUT ON NORDCOM-MONITOR
      THE BANKVALUE FOR THE DESIRED SGB
      AND THE SM-NR. FOR THE ACTUAL MONITOR
      HAS TO BE SPECIFIED
      "16" WITHOUT PARAMETERS RESET PRINTOUT
      TO ORIGINAL DEVICE

*17I
17,[BANK],[SM.NR.]
       COPY FROM TYT TO NORDCOM-MONITOR
       TO ESCAPE: KEY "ESCAPE"

*20I
20     (NO PARAMETERS)
       TEST ACM COMMUNICATION

       TO MAKE TEST LOOPING ON ERROR:
       WRITE "L" IN FRONT OF COMMAND

       TO STOP TEST: KEY ANY CHARACTER BUT "C"

       TO GET OUT OF "LOOP ON ERROR":
       KEY "C" FOR CONTINUE TO NEXT TEST-SECTION

*21I
21,[BANK1],[BANK2],.........,[BANK(N)]
       TEST BUFFERS ON NORDCOM

       R,G AND B BITS ON GB-BANK, MAY BE SPECIFIED TOGETHER
       THE BUFFERS WILL BE TESTED ONE BY ONE ANYWAY

       SGB0 EVENTUALLY HAS TO BE SPECIFIED FIRST

       THE TEST WILL NOT LOOP ON ERROR, BUT CONTINUE TEST
       WITH ERROR-PRINTOUT CONSENTRATED.
       THE "EMASK" IN PRINTOUT TELLS WICH BITS FAILING
       AND THE "NERR" TELLS HOW MANY ERRONEUS WORD READ
       IF MORE THEN ONE ERROR WITH THE SAME "EMASK",THE
       DISPLAYDE DATA TELLS ABOUT THE FIRST AND THE LAST
       FAILING ADDRESS
       ALL IN THE SAME SECTION
```

```
       TO STOP THE TEST, KEY ANY CHARACTER BUT "C"

*22I
22     (NO PARAMETERS)
       ROUTINE TO INVESTIGATE BUFFER-CONFIGURATION
       AND PRINT BANK-VALUES OF INSTALLED BUFFERS

*23I
23     (NO PARAMETERS)
       ROUTINE TO TEST ALL INSTALLED BUFFERS
       INVESTIGATION OF BUFFER-CONFIGURATION
       (COMM.22) WILL BE DONE AUTOMATICLY

*24I
24,[LOW.ADDR.],[UPP.ADDR.]
       DUMP DOWN CORE FROM LOW.(UPP. ON PRINT-DEVICE
       IF UPP. IS LESS OR EQUAL TO LOW., A SINGLE
       DUMP OF LOW. WILL BE DONE

*25I
25,[BANK],[ADDR.],[PATTERN]
       ROUTINE TO WRITE AND READ ON A SINGLE
       ADDRESS IN A BUFFER. TO LOOP, SPECIFY "L"

*26I
26,[REF.NR.]
       PRINT OUT INFORMATION ABOUT:
             REF.NR=00:      ADDRESSES ON NORDCOM
               "     01:      BANK DATA
               "     02:      GB   ADDR. & DATA
               "     03:      SGB  ADDR. & DATA
               "     04:      SM   DATA
               "     05:      ALL AVAILIBLE COMMANDS IN MONITOR
               "     06:      COMMAND INSTRUCTION FOR MONITOR

*27I
27     (NO PARAMETERS)
       START FROM NSTART (LIKE LOADING NEW TAPE)

*30I
30,[DEV.NR.1],[DEV.NR.2],.........,[DEV.NR.N]   (MAX 17 DEV.NR.S)
            ROUTINE TO TEST OLD NORDCOM.
            SPECIFY THE DEV.NR.(S) FOR ACTUAL ACM(S)
            PRINTOUT IS: GB(DEV.NR)

*26,00

ACTUAL (ACM)ADDRESSES ON NORDCOM:
       ADDRESS (AEREA):      DESTINATION: NOTE:

       000000-007777         SGB CHAR.-BUFF. 1
       020000-021777         SGB SYMB GEN 1
       000000-037777         GB BUFFER  1
       140000Q               BANK
```

```
140000+N*2000          ENABLE-MASK ON SM(N)
140001+N*2000          INTENSITY-MASK ON SM(N)
140002+N*2000          FG REGISTER    ON SM(N)
140003+N*2000          BG REGISTER    ON SM(N)

172000+N*2             FG ACCESS   FG(N)
174000+N*2             BG ACCESS   BG(N)

120000                 VG RED COLOUR
110000                 VG GREEN COLOUR
104000                 VG BLUE COLOUR

40000-47777            SPARE  (NO RESPONSE)
176000                 DUMMY  (BUT RESPONSE)
```

NOTE 1: BANK IS TO BE SPECIFIED PREVIOUS

*26,1

```
BANK DATA:
      BIT(0-2):        MAIN PICTURE NR. (0-7)
      BIT 3:           "BLUE" GB
      BIT 4:           "GREEN" GB
      BIT 5:           "RED" GB

      BIT(3-5) ALL ZERO:  ACCESS TO SGB
      OTHERWICE:          ACCESS TO GB
```

*26,2

```
GB ADDRESS:
      BIT(0-5):        HORIZONTAL BYTE ADDRESS
      BIT(6-13):       VERTICAL LINE ADDRESS

GB DATA:
      BIT(0-5):        BYTE DATA
      BIT 0            RIGHTMOST BIT
      BIT 5            LEFTMOST BIT
```

*26,3

```
SGB CHARACTER-BUFFER ADDRESS:
      BIT(0-5):        HORIZONTAL CHAR.ADDR.
      BIT(6-11):       VRTICAL CHAR.LINE-ADDR.

SGB CHARACTER-BUFFER DATA:
      BIT(0-6)         CHARACTER IDENT
      BIT 7            RED COLOUR BIT
      BIT 8            GREEN COLOUR BIT
```

```
              BIT 9             BLUE COLOUR BIT
              BIT 10            CURSOR FLAG
              BIT 11            BLINKING FLAG

       SGB CHARACTER-GENERATOR ADDRESS:
              BIT(0-2)          ROW ADDRESS
              BIT(3-9)          CHARACTER IDENT

       SGB CHARACTER-GENERATOR DATA:
              BIT(0-5):         COLUMN DATA
              BIT 0:            RIGHTMOST BIT
              BIT 5:            LEFTMOST BIT

*26,4

SM DATA FORMAT:
       EANBLE-REGISTER:
              BIT(0-7)          ENABLE MAIN-PICTURE(0-7)
              BIT 7             HIGHEST PRIORITY
              BIT 0             LEAST PRIORITY
              BIT(N)=1          ENABLE PICTURE(N)
              BIT(N)=0          DISABLE PICTURE(N)

       INTENSITY LEVEL-REGISTER:
              CORRESPONDING TO MAIN-PICTURE LIKE ABOVE
              BIT(N)=1          HIGH INTENSITY
              BIT(N)=0          LOW INTENSITY

       FG-REGISTER:
              BIT(0-2)          FG NR. (0-7)
              BIT 3             RED COLOUR BIT
              BIT 4             GREEN COLOUR BIT
              BIT 5             BLUE COLOUR BIT
              BIT 6             INTENSITY  (=1 FOR HIGH)
              BIT 7             DISABLE FG (=0 FOR ENABLE)

       BG-REGISTER:
              LIKE FG-REG. , BUT BG INSTEAD OF FG


*23
SGB:04  TESTED
SGB:05  TESTED
SGB:07  TESTED

*21,17
 ERROR ON  GB:17
ADDRESS:  EXPECTED: FOUND:   EMASK:   NERR: TYPE:

000000    000000    000077
037777    000025    000033   000077  156774  ALL EQUAL
```

```
000001     000000
♦23
SGB:04   TESTED
SGB:05   TESTED

♦22
SGB:4      INSTALLED
SGB:5      INSTALLED
SGB:7      INSTALLED
 NO OTHER BUFFERS INSTALLED, OR IMPOSSIBLE TO REACH

♦22
SGB:4      INSTALLED
SGB:5      INSTALLED
SGB:7      INSTALLED
 NO OTHER BUFFERS INSTALLED, OR IMPOSSIBLE TO REACH

♦20
 ACM NOT READY  WITHIN ONE LINE-PERIODE  AFTER "WDATA"
 ACM    TESTED

♦0
```

APPENDIX B

INTERFACE TO NORDCOM - ACM MODULE

The standard interface to NORDCOM makes available a direct memory access channel to the refresh memory of the display controller.

Pin Assignment

If no other special agreements are made, the NORDCOM system is delivered with one interface-plug of type BURNDY MS-5 RM/58, female on chassis.

The signals available on this plug are:

Signal name	Logical "1"	Burndy plug		Signal type
		Signal	Ground	
CD 0	LOW	A	C	TWISTED PATT OF BIDIRECTIONAL DATA BUS
CD 1	LOW	B	D	
CD 2	LOW	E	H	
CD 3	LOW	F	J	
CD 4	LOW	K	M	
CD 5	LOW	L	N	
CD 6	LOW	P	S	
CD 7	LOW	R	T	
CD 8	LOW	U	W	
CD 9	LOW	V	X	
CD 10	LOW	Y	AA	
CD 11	LOW	Z	BB	
CD 12	LOW	CC	EE	
CD 13	LOW	DD	FF	
CD 14	LOW	HH	KK	
CD 15	LOW	JJ	LL	
RDTA	LOW	MM	PP	CONTROL
SADT	LOW	NN	RR	CONTROL
WDTA	LOW	SS	UU	CONTROL
BUSY	LOW	TT	VV	FEED-BACK
MLOAD	LOW	XX	WW	MASTER

Data Bus

The data bus available at the interface plug is for bidirectional transmission of data between NORDCOM and the main computer

system. The interconnecting cable should be a twisted pair telephone type with impedance, approximately 120 Ω.

At the main computer, the data lines should be terminated to a 5V power source with a resistance of 220 Ω. The other line of the twisted pair should be connected to ground.

The driving capacity of the data transmitters in NORDCOM allows the main computer to load the data lines with 10 standard TTL loads in addition to the termination. The data receivers in NORDCOM represent standard TTL load to each data line.

Recommended data transmitter in the main computer is SN 7438.

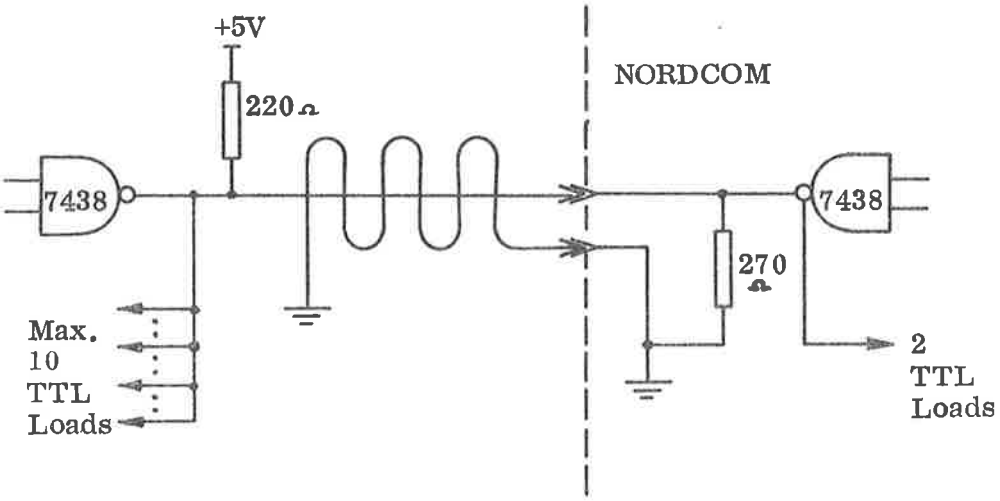

Figure B.1: Data Bus Lines, 16-off

Control Lines

The procedure for data communication between NORDCOM and the main computer follows a handshake sequence. The feed-back signal BUSY is involved in all control procedures. The dour input control lines to NORDCOM are terminated with approximately 120 Ω. Standard TTL buffers with fan-out 30 are recommended as drivers in the main computer.

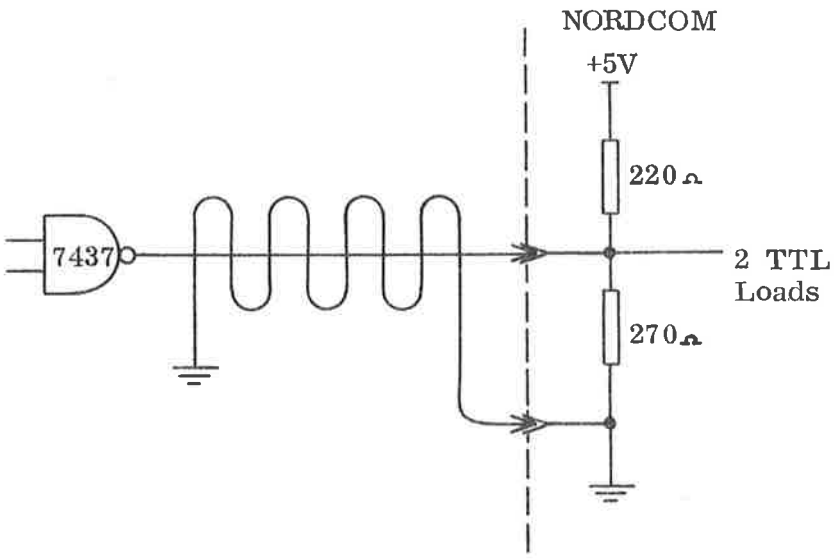

Figure B.2: Control Lines, 3-off

Control Functions

RDTA: Read data from memory location corresponding to the current address contained in the address register. Upon completion of this operation, the address register of the NORDCOM interface is incremented by one.

SADR: Set address register in NORDCOM interface corresponding to data on data bus.

WDTA: Write data on data bus to memory location corresponding to the current address contained in the address register. Upon completion of this operation, the address register of the NORDCOM interface is incremented by one.

Feed-Back

BUSY: This signal line is used as a reply to any of the control functions. The timing of this signal gives the information necessary to accomplish the handshake procedure.

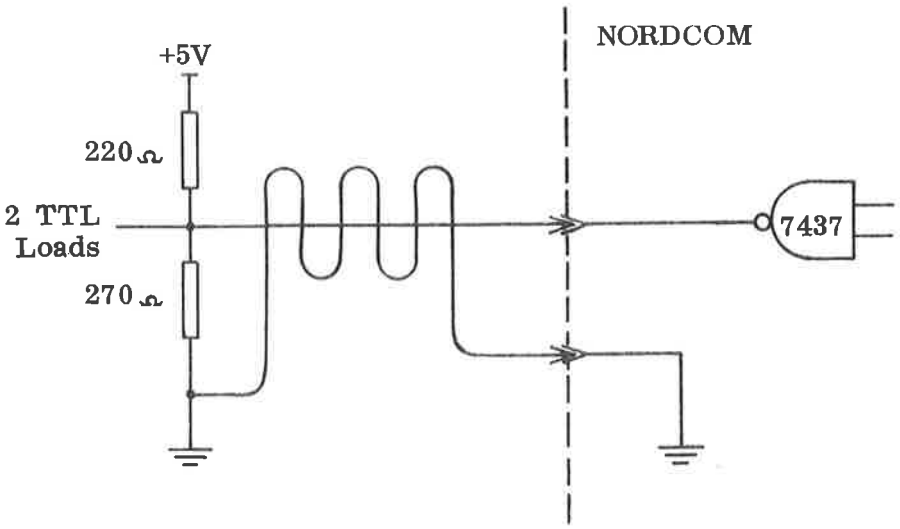

Figure B.3: BUSY-line, 1-off

Master

MLOAD: Clear signal to NORDCOM. The signal may have any length and does not influence operation of the three control functions.

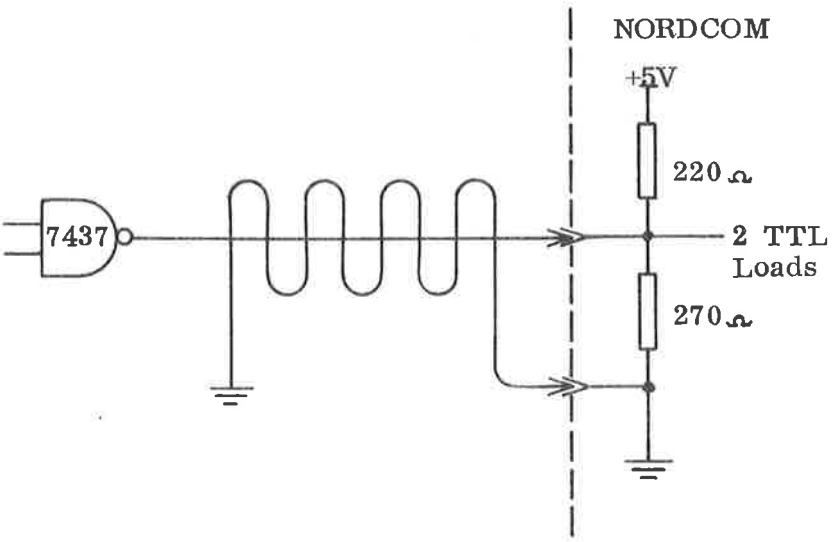

Figure B.4: Master-line, 1-off.

Timing Diagram

Below is given a description of the timing sequence of the three control functions. The sequences are exclusive, so that one function must be completed before the next is started. Control functions may be executed in any order.

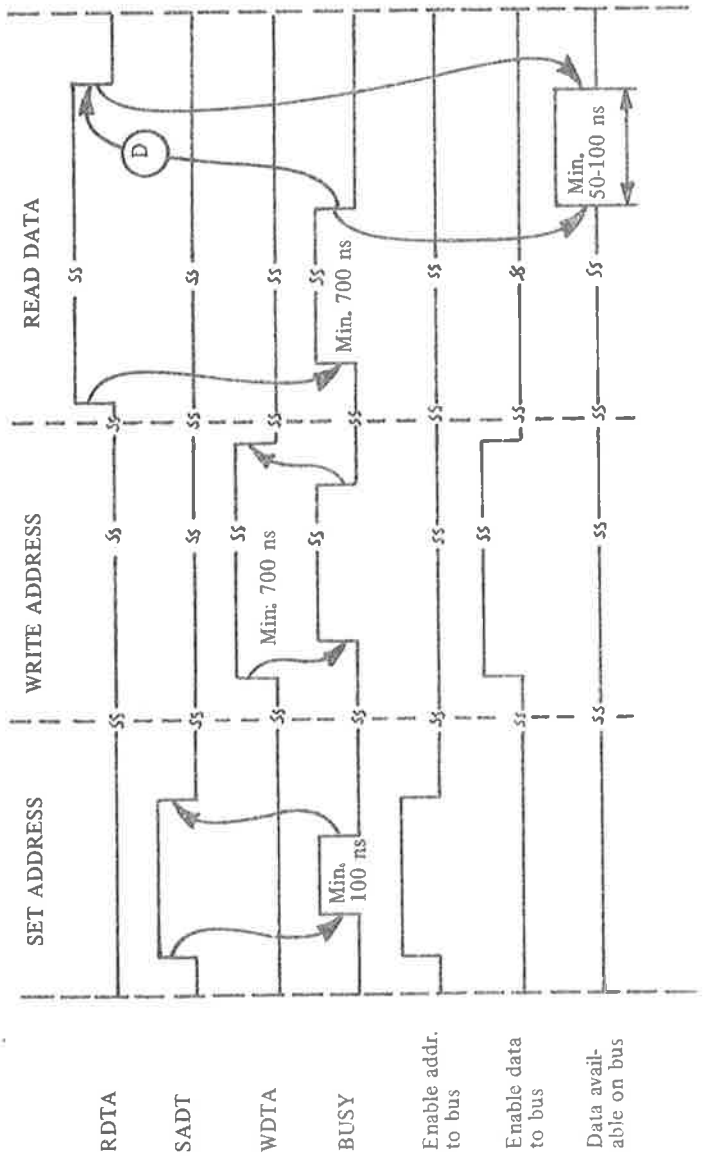

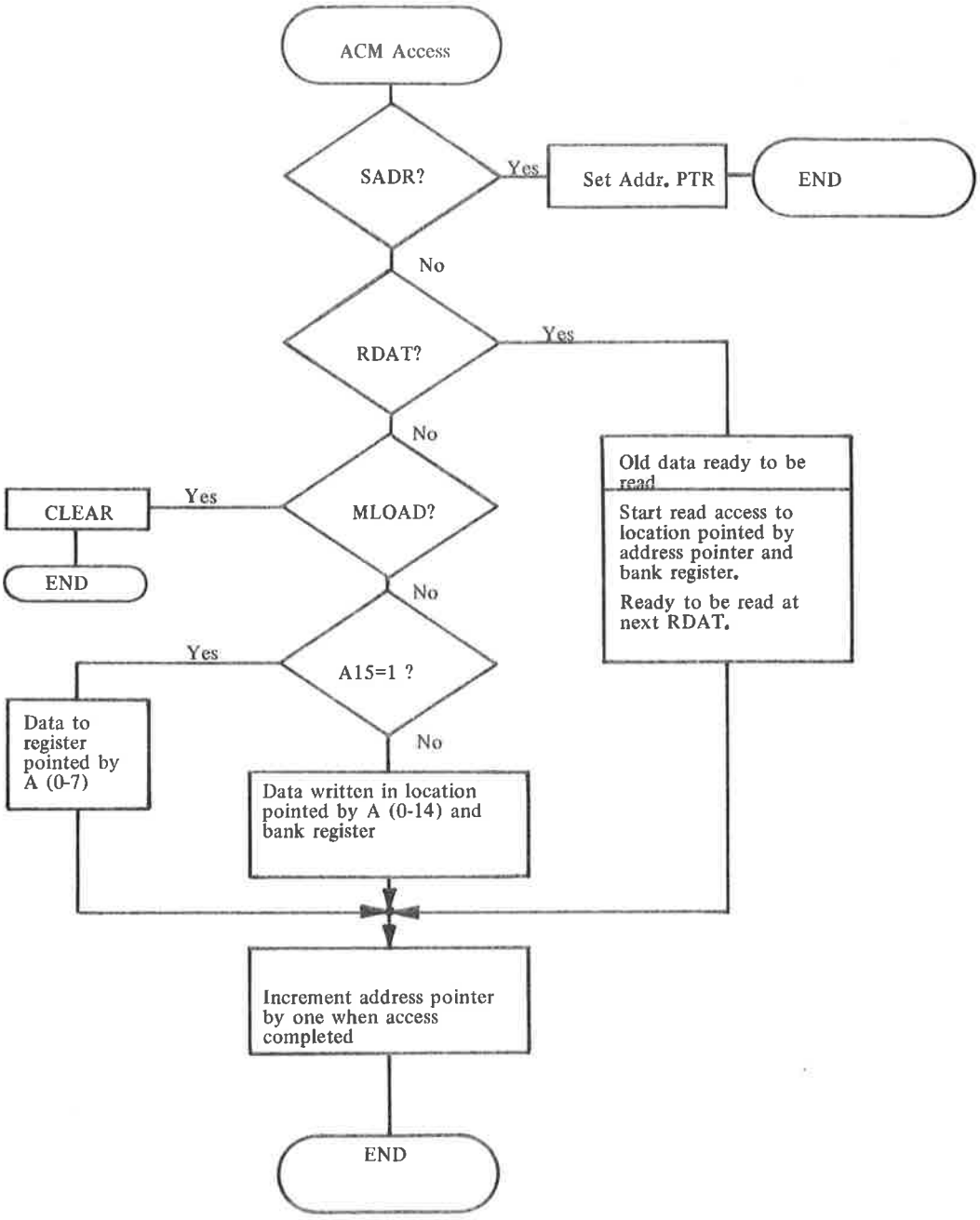
ACM Access
SADR?
Yes
Set Addr. PTR
END
No
RDAT?
Yes
No
Old data ready to be read
Start read access to location pointed by address pointer and bank register.
Ready to be read at next RDAT.
CLEAR
Yes
MLOAD?
END
No
Yes
A15=1 ?
Data to register pointed by A (0-7)
No
Data written in location pointed by A (0-14) and bank register
Increment address pointer by one when access completed
END

APPENDIX C

SIGNAL DEFINITIONS

ACM	Accumulator to Core Module
BG	Background
B/W	Black and White
CCM	Cross Coupler Module
CG	Curve Generator
FG	Foreground
GB	Graphic Buffer
GP	Grid Pattern
MP	Main Picture
RGB	Red, Green and Blue
R/W	Read/Write
SGB	Semigraphic Buffer
SM	Selector Module
TB	Tracker Ball
TV	TV-Monitor
VG	Vector Generator
W	Write
C	Cursor flag
BL	Blinking Flag

A/S NORSK DATA-ELEKTRONIKK

Title: NORDCOM-74 TEST PANEL

Drawing no.

DRAWN BY IB/eml	Remarks	Replacement for	Date
APPROVED BY		Replaced by	Date
DATE 3/10/74			

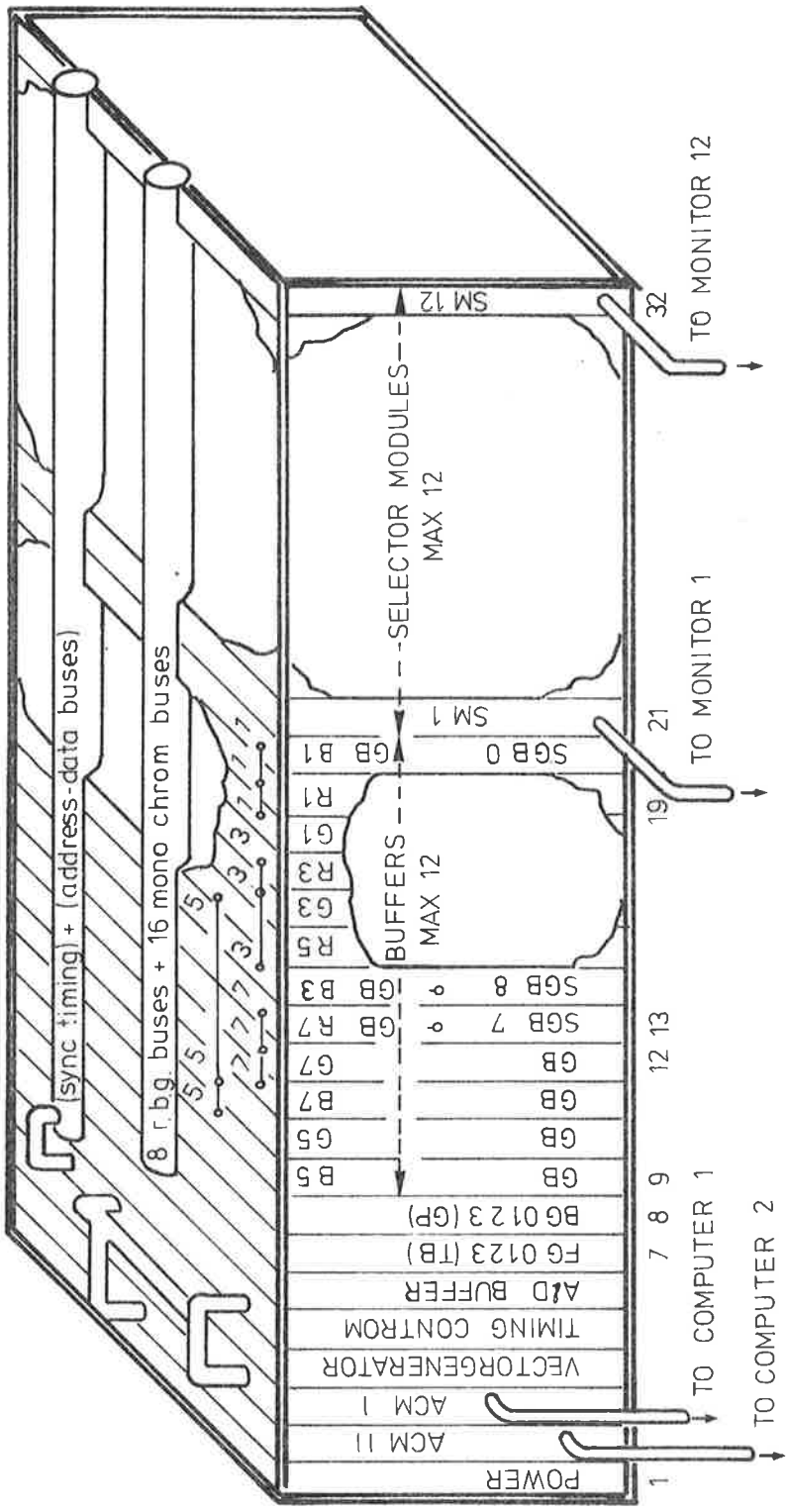

NORDCOM SYSTEM

CARD ASSEMBLY

1	1306 ACM DCH II
2	1306 ACM DCH I
3	
4	
5	1305 TIMING
6	1302 A & D BUFFER
7	FG
8	BG
9	
10	
11	
12	
13	
14	
15	
16	
17	
18	
19	
20	
21	1303 SELECTOR MODULE 1
22	" " " 2
23	" " " 3
24	" " " 4
25	" " " 5
26	" " " 6
27	" " " 7
28	" " " 8
29	" " " 9
30	" " " 10
31	" " " 11
32	" " " 12

PROJECT: _____

30/9/74/IB/eml

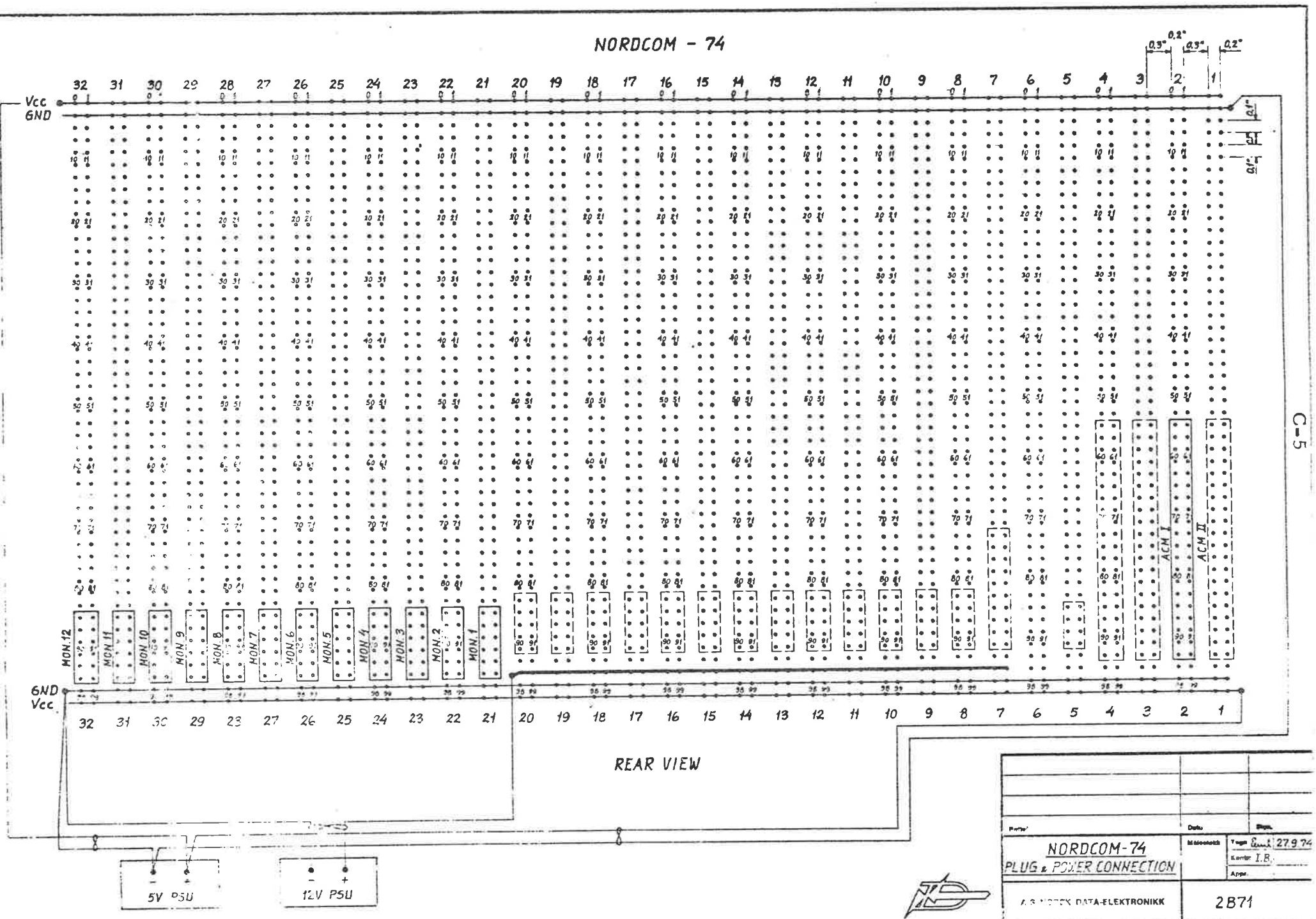
NORDCOM - 74
Vcc
GND
32 31 30 29 28 27 26 25 24 23 22 21 20 19 18 17 16 15 14 13 12 11 10 9 8 7 6 5 4 3 2 1
0.3" 0.2" 0.3" 0.2"
0.1"
MON.12
MON.11
MON.10
MON.9
MON.8
MON.7
MON.6
MON.5
MON.4
MON.3
MON.2
MON.1
ACM I
ACM II
GND
Vcc
REAR VIEW
5V PSU
12V PSU
C-5
NORDCOM-74
PLUG & POWER CONNECTION
A.S NORSK DATA-ELEKTRONIKK
2B71
27.9.74
I.B.

NORDCOM - 74

MONITOR INTER CONNECTION

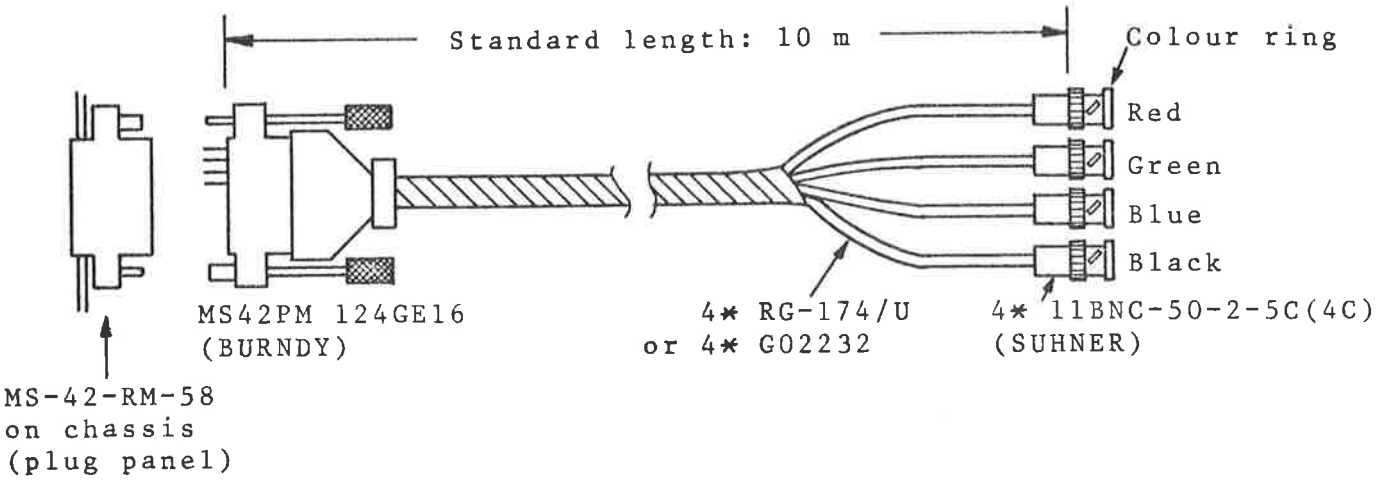

PLUG	CABLE	BNC (COLOUR RING)	SIGNAL
E	SCREEN	BLACK	Y
H	CORE		
F	SCREEN	BLUE	B
J	CORE		
K	SCREEN	GREEN	G
M	CORE		
L	SCREEN	RED	R
N	CORE		

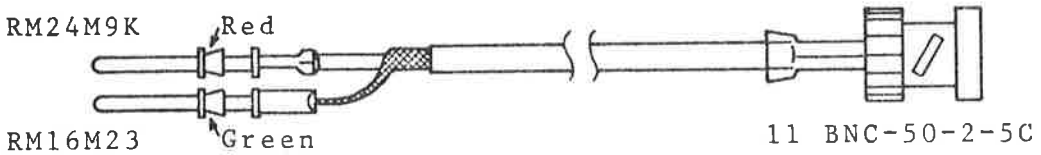

30/9/74/IB/eml

NORDCOM - 74

NORD-10 - NORDCOM INTER CONNECTION

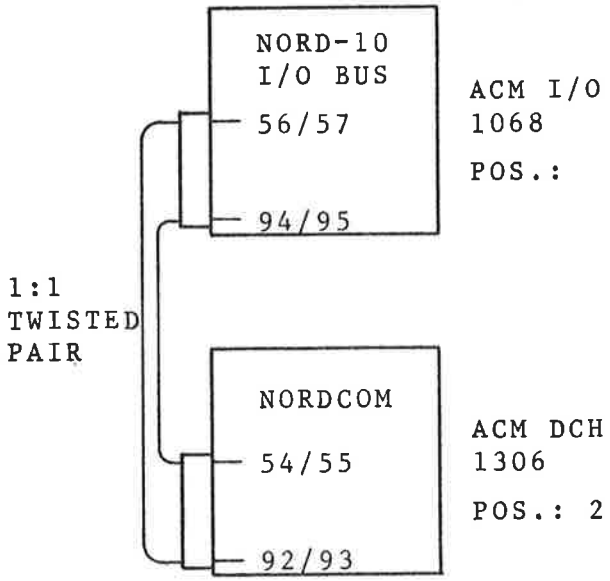

A :
NORDCOM AND
N-10 I/O IN
SAME RACK

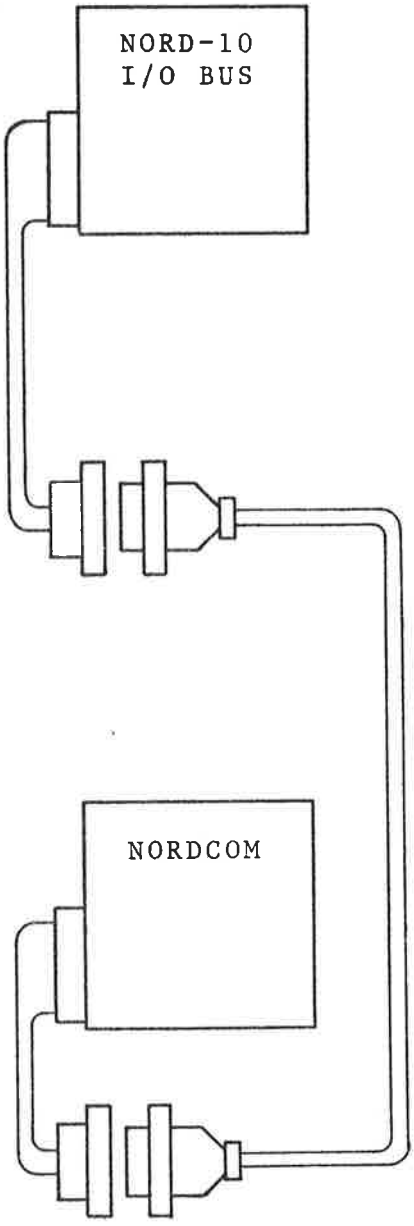

B :
NORDCOM AND
N-10 I/O NOT
IN SAME RACK

APPENDIX D

NORDCOM LOGICAL DIAGRAMS

Contr. word

4 → RDTA
1000 → MLOAD
4004 → WDTA
14004 → SADT

STANDARD I/O BUS

ACM I/O 1068

ADDR. DECOD. 3, 9, 12D
DEQL
40 DATA BUFFER 2, 5, 7B/3, 5, 7A
41 DATA BUFFER 16, 14, 12A/16, 14, 12B
43 CONTR. WORD 10B
42 STATUS WORD 7A
CONTR. SIGN.
CDO - CD15
4004 SADR
4004 WDTA
4 RDTA
1000 MLOAD Clear NORDCOM
BUSY (answer)

NORDCOM-74

Ex. sync.

INTER-FACE TO NORD-10

PICTURE SOURCES

GRAPHIC BUFFER 1301
16K x 6 bits Dynamic
Chips enable
Chips select
Shift reg. 18A
Data out
ADDR.: 0-37777₈

SGB 1304
CRB Character refresh buffer 4K 12 bits
CGB Character generator buffer
Symb. position
ROW ADDR.
Shift reg. 74166 18B
Data (serial)
COLOUR CURSOR BLINK
6x6 matrix
ADDR.: 0-7777₈
ADDR.: 20000-21777₈

TRACKER BALL 1315
From the sweep
From Tr. ball
Counts up/down according to the Tracker ball
MARKEN
HEN Clock pulses
ADDR.: 172000-172001

GRID PATTERN 1317
Horizontally Counter
Vertically
6x6
16x16
32x32
64x64
CA Current address from the sweep

DRDY (Contr. MDB-Bus)

ACM DCH 1306
ADDR. Counter (one count every READ/WRITE)
MDB0 MDB15
(Identically N-20 Data Bus)

CONTROL MODULES

TIMING 1305/III
X-tal
DECODERS
Timing Signals
Sync. Monitor
Internal Contr. Sign.

ADDR./DATA BUFFER 1302/III
Swept from Timer
VFRAME HFRAME
BANK
ADDR. GB, SGB
ADDR. SM
DATA INTERNNALLY BUS

PICTURE BUSES

SELECTOR MODULE 1303
TO MONITOR
CCM 1313
CROSS COUPLER MODULE
From Pict. Bus or CCM
MAIN PICTURES
Priority physically decided
MAIN PICT. ENABLE
MAIN PICT. INTENSITY
FOREGROUND SELECT
BACKGR. SELECT
DOTT
SYNC
ADDR.: 140000₈ + SM * 2000₈ + Sub. reg. no.

VIDEO DIGITISER 1310
From CAMERA
Video B/W
Vsync
Hsync
Pulse breadth Modulator
Sync Separator
B6-Bus
SYNC
DOTT
From Timer

Rettet	Dato	Sign.
NORDCOM -74 (UH 200) BLOCK DIAGR.	Målestokk	Tegn Emil 19.2.76
	Kontr. EEL	
	Appr	
A/S NORSK DATA-ELEKTRONIKK	2B91	

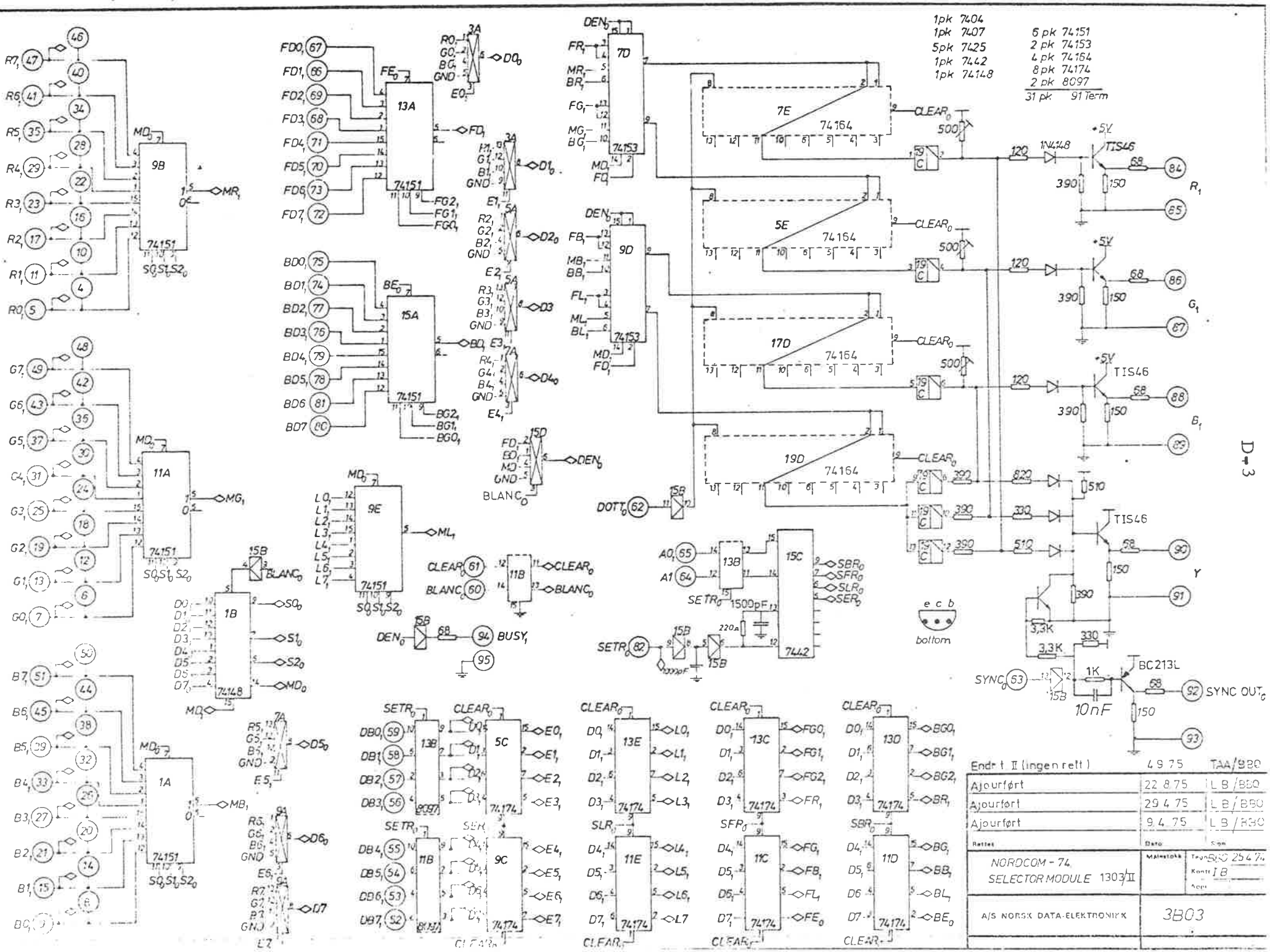
1pk 7404
1pk 7407
5pk 7425
1pk 7442
1pk 74148
6 pk 74151
2 pk 74153
4 pk 74164
8 pk 74174
2 pk 8097
31 pk 91 Term
Endr t II (ingen rett) 4 9 75 TAA/BBO
Ajourført 22 8 75 L B/BBO
Ajourført 29 4 75 L B/BBO
Ajourført 9 4 75 L B/BBO
Rettes Dato Sign
NORDCOM - 74
SELECTOR MODULE 1303/II
Målestokk
Tegn BBO 25 4 74
Kontr I B
Appr
A/S NORSK DATA-ELEKTRONIKK
3B03
bottom
SYNC OUT
BC213L
10nF
TIS46
74151
74153
74164
74148
74174
8097
7442
1500pF
1000pF
3,3K
1K
+5V
BLANC
BUSY
DEN
CLEAR
SETR
SYNC

D-3

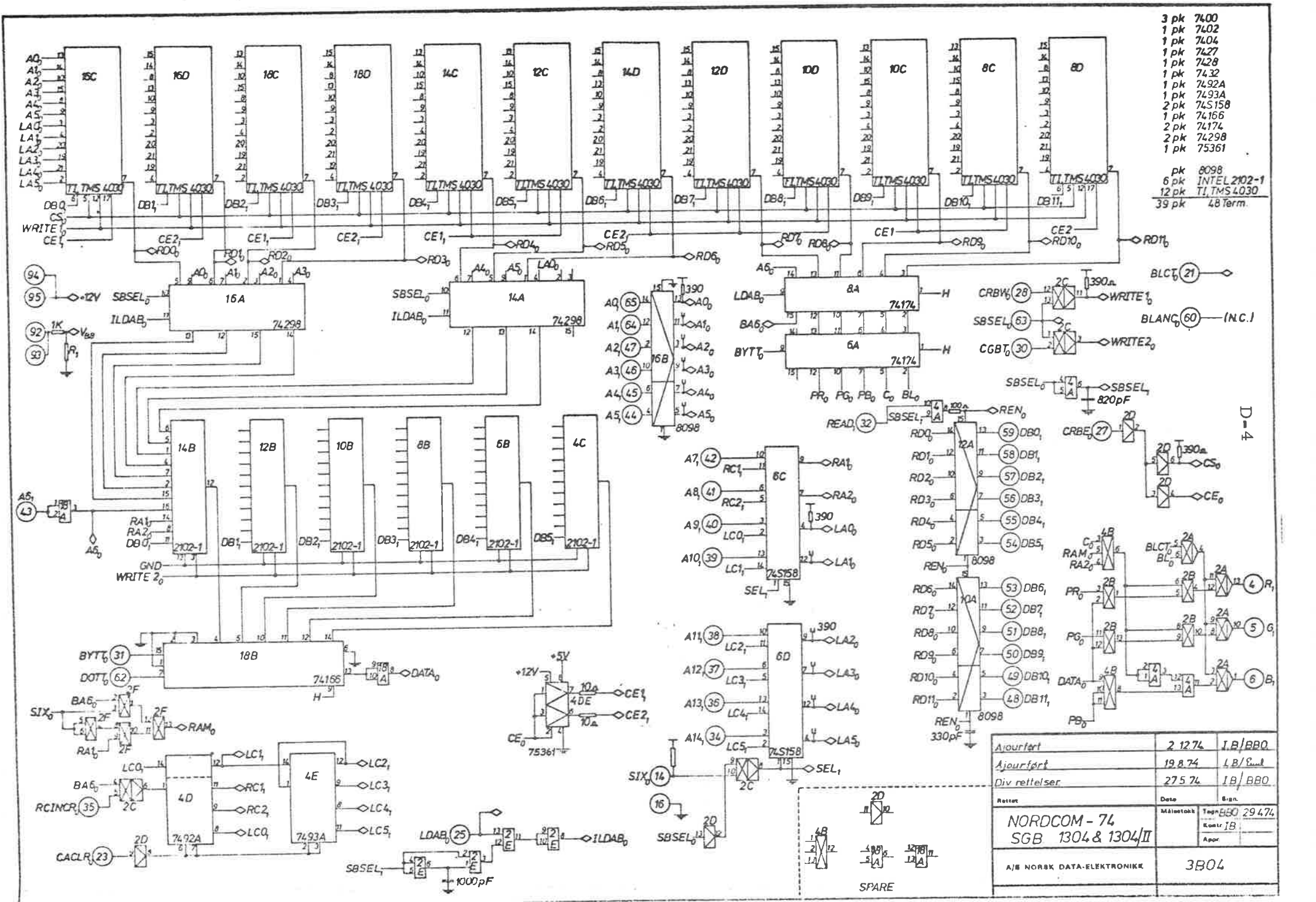
3 pk 7400
1 pk 7402
1 pk 7404
1 pk 7427
1 pk 7428
1 pk 7432
1 pk 7492A
1 pk 7493A
2 pk 74S158
1 pk 74166
2 pk 74174
2 pk 74298
1 pk 75361
pk 8098
6 pk INTEL 2102-1
12 pk TI, TMS 4030
39 pk 48 Term.
D-4
Ajourført 2.12.74 I.B/BBO
Ajourført 19.8.74 LB/Emil
Div rettelser 27.5.74 IB/BBO
Rettet Dato Sign.
NORDCOM - 74
SGB 1304 & 1304/II
Målestokk
Tegn BBO 29.4.74
Kontr IB
Apor
A/S NORSK DATA-ELEKTRONIKK
3B04
SPARE

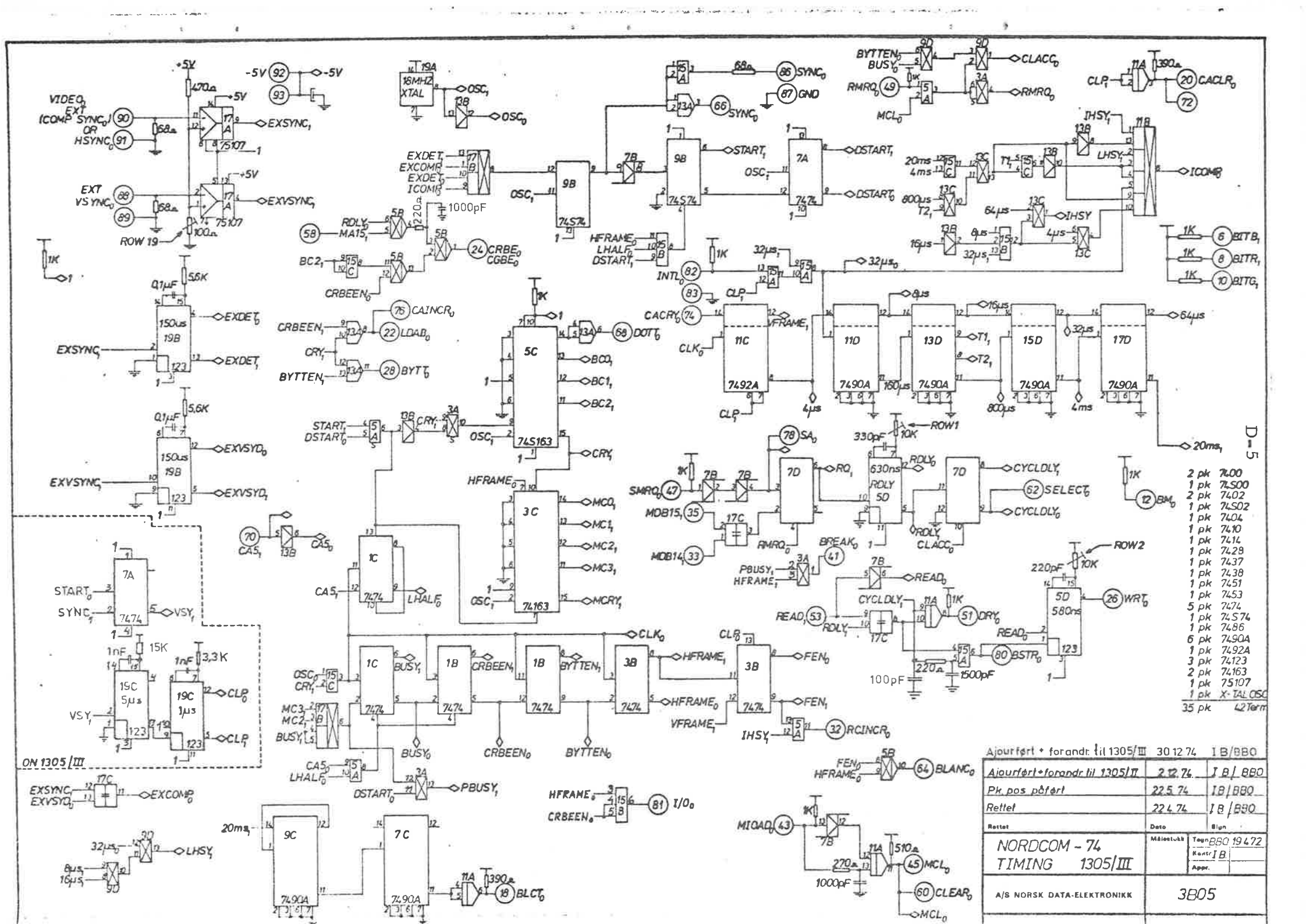

D-5
2 pk 7400
1 pk 74S00
2 pk 7402
1 pk 74S02
1 pk 7404
1 pk 7410
1 pk 7414
1 pk 7428
1 pk 7437
1 pk 7438
1 pk 7451
1 pk 7453
5 pk 7474
1 pk 74S74
1 pk 7486
6 pk 7490A
1 pk 7492A
3 pk 74123
2 pk 74163
1 pk 75107
1 pk X-TAL OSC
35 pk 42 Term
Ajourført + forandr. til 1305/III 30 12 74 I B/BBO
Ajourført + forandr. til 1305/II 2.12.74 I B/BBO
Pk. pos. påført 22.5.74 I B/BBO
Rettet 22.4.74 I B/BBO
Rettet Dato Sign
NORDCOM - 74
TIMING 1305/III
Målestokk
Tegn BBO 19472
Kontr. I B
Appr.
A/S NORSK DATA-ELEKTRONIKK
3B05
ON 1305/III

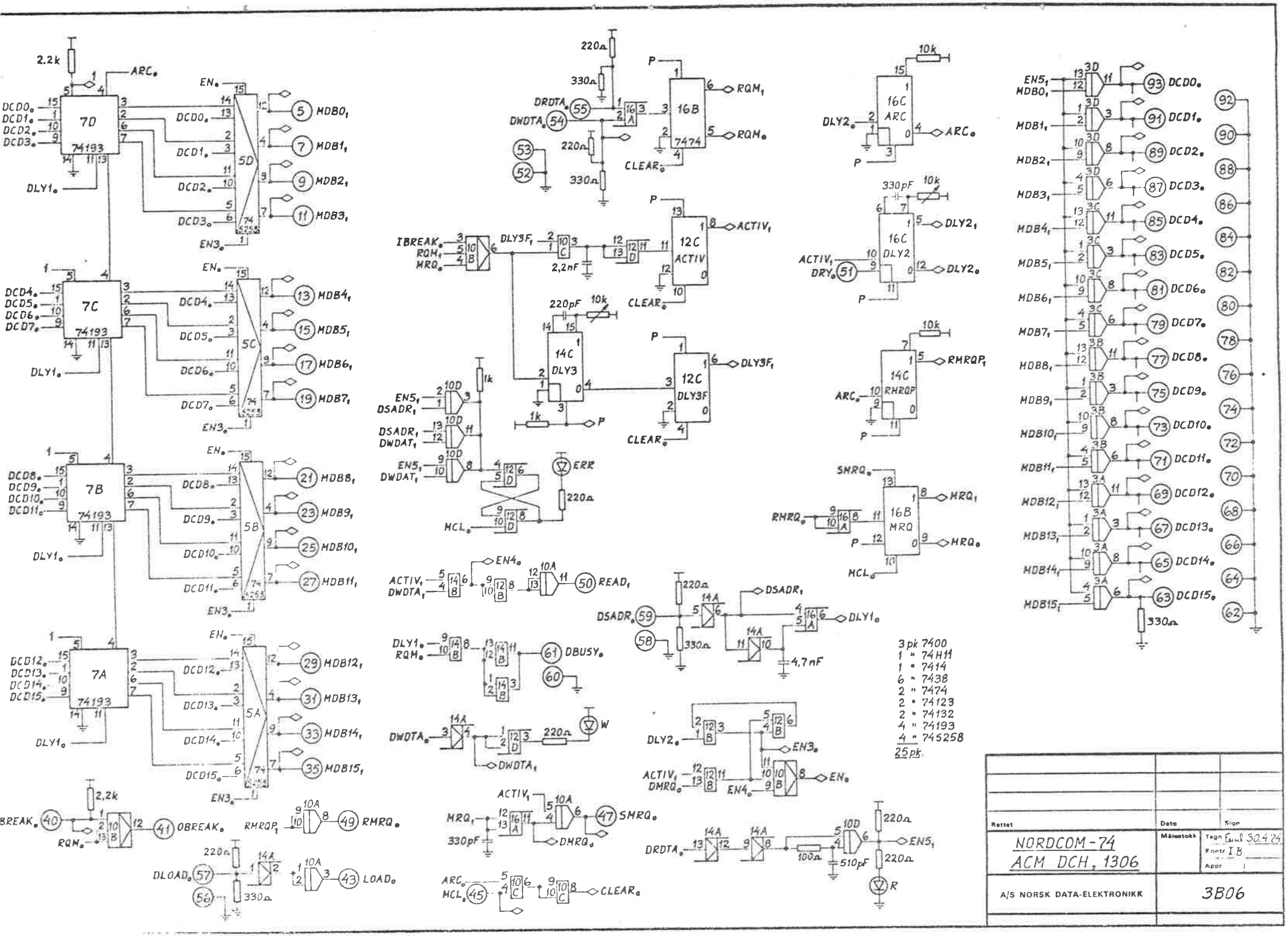

7D 74193
7C 74193
7B 74193
7A 74193
5D 74 5258
5C 74 5258
5B 74 5258
5A 74 5258
16B 7474
12C ACTIV
14C DLY3
12C DLY3F
16C ARC
16C DLY2
14C RMRQP
16B MRQ
3 pk 7400
1 " 74H11
1 " 7414
6 " 7438
2 " 7474
2 " 74123
2 " 74132
4 " 74193
4 " 745258
25 pk
NORDCOM-74
ACM DCH, 1306
A/S NORSK DATA-ELEKTRONIKK
3B06

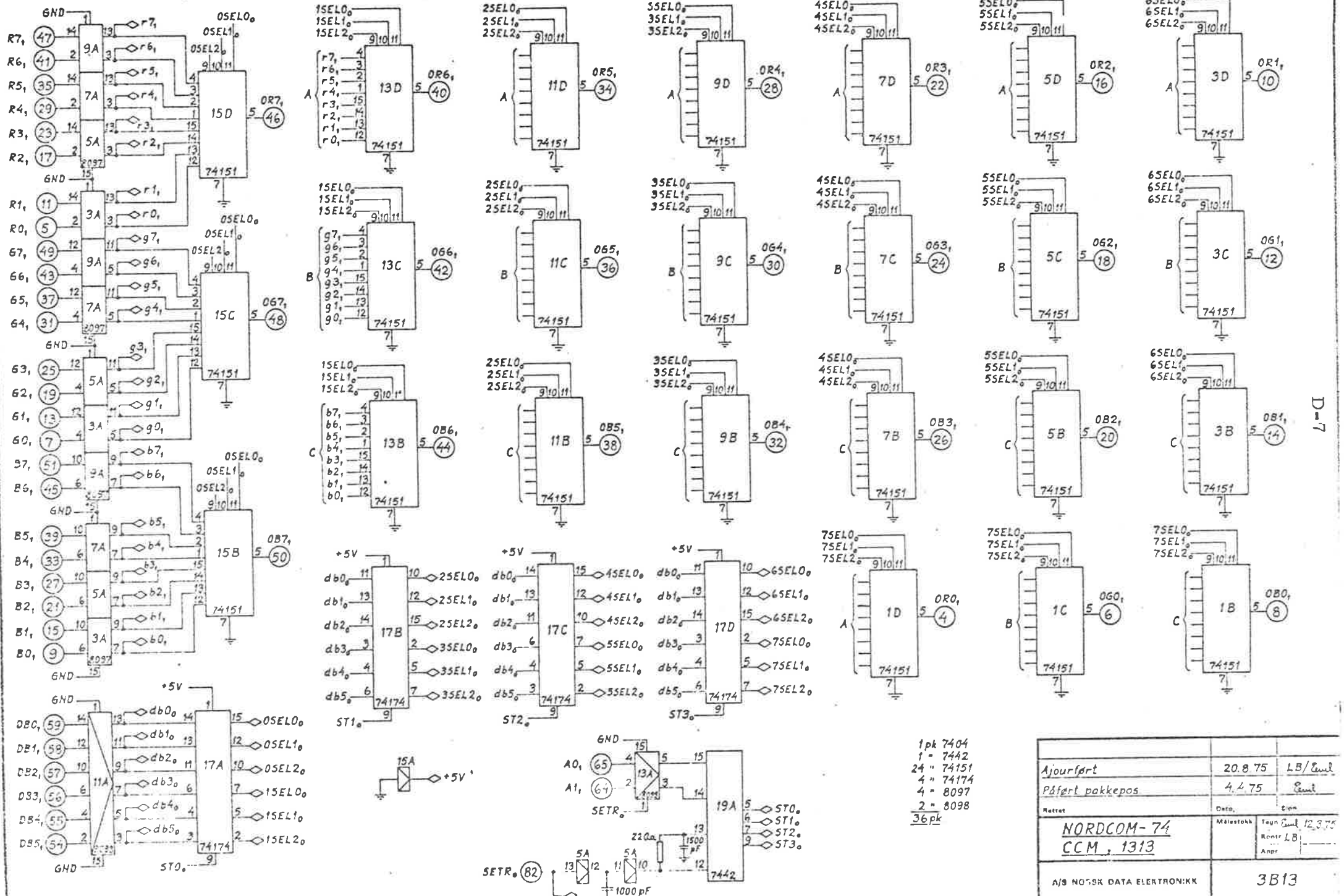

1 pk 7404
1 " 7442
24 " 74151
4 " 74174
4 " 8097
2 " 8098
36 pk

Ajourført	20.8.75	LB/Emil
Påført pakkepos	4.4.75	Emil
Rettet	Dato,	Sign
NORDCOM-74 CCM, 1313	Målestokk	Tegn Emil 12.3.75 Kontr LB Appr
A/S NORSK DATA ELEKTRONIKK	3B13	

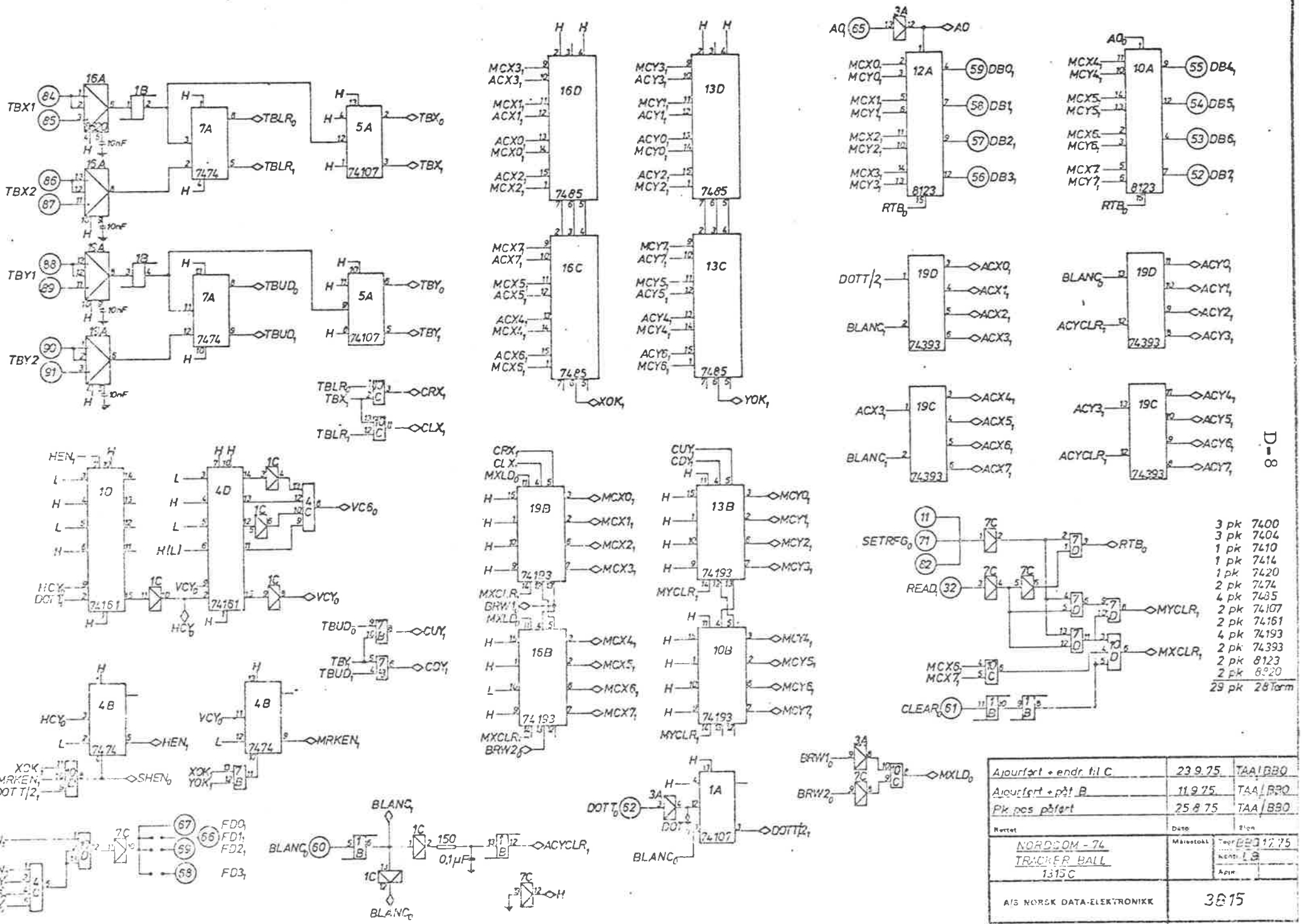

3 pk	7400
3 pk	7404
1 pk	7410
1 pk	7414
1 pk	7420
2 pk	7474
4 pk	7485
2 pk	74107
2 pk	74161
4 pk	74193
2 pk	74393
2 pk	8123
2 pk	8820
29 pk	28 Term

Ajourført + endr. til C	23.9.75	TAA/BBO
Ajourført + påt B	11.9.75	TAA/BBO
Pk pos påført	25.8.75	TAA/BBO
Rettet	Dato	Sign

NORDCOM - 74
TRACKER BALL
1315 C

Målestokk

Tegn BBO 17.75
Kontr. LB
Apln

A/S NORSK DATA-ELEKTRONIKK

3815

D-8

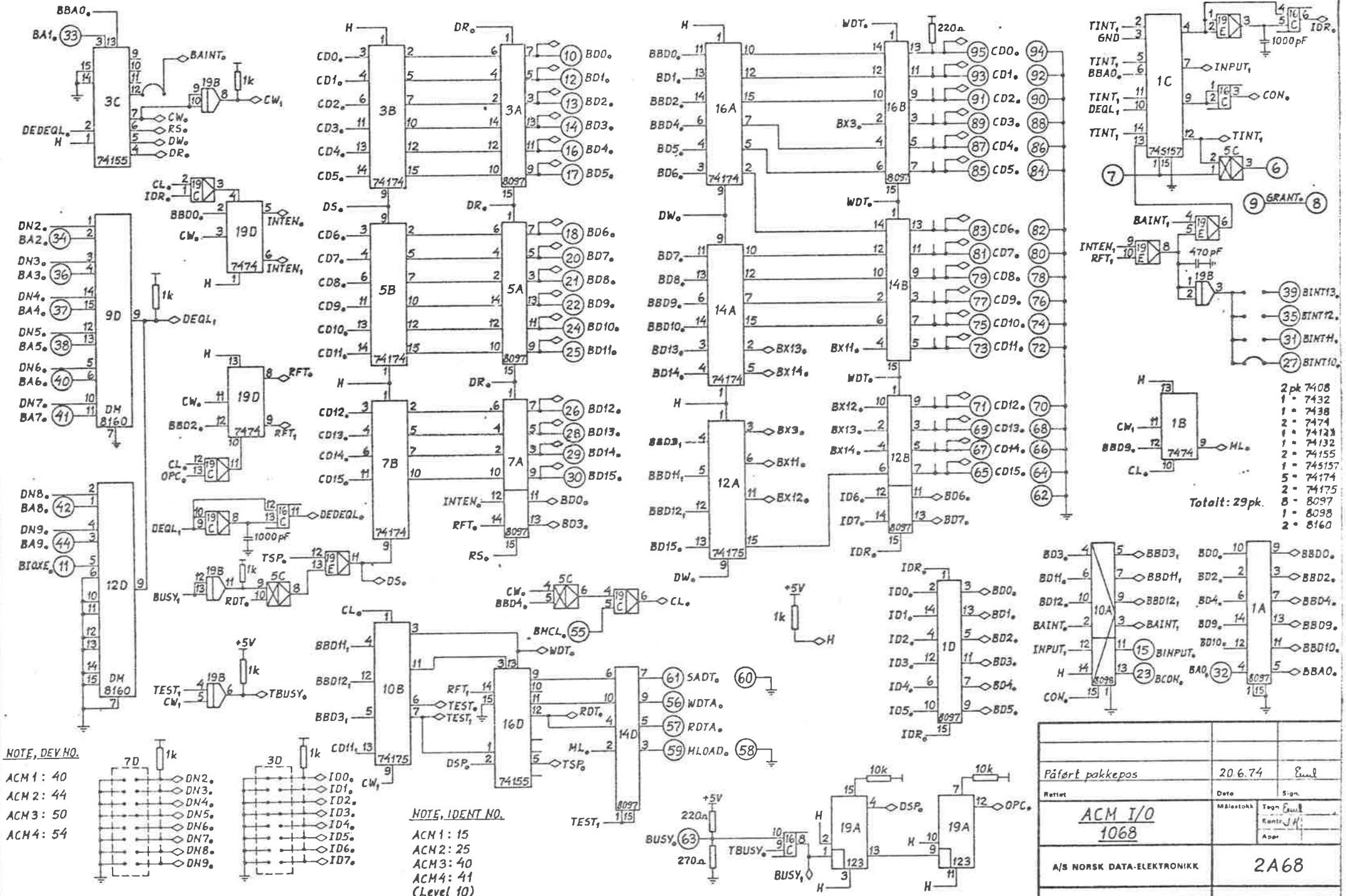
NOTE, DEV NO.
ACM 1: 40
ACM 2: 44
ACM 3: 50
ACM 4: 54
NOTE, IDENT NO.
ACM 1: 15
ACM 2: 25
ACM 3: 40
ACM 4: 41
(Level 10)
Totalt: 29pk.
2 pk 7408
1 - 7432
1 - 7438
2 - 7474
1 - 74123
1 - 74132
2 - 74155
1 - 745157
5 - 74174
2 - 74175
8 - 8097
1 - 8098
2 - 8160
Påført pakkepos
20.6.74
Rettet
Dato
Sign.
ACM I/O
1068
Målestokk
Tegn
Kontr.
Appr.
A/S NORSK DATA-ELEKTRONIKK
2A68

A/S NORSK DATA-ELEKTRONIKK	Title: TERMINATION CARD 1316	Project: NORDCOM - 74

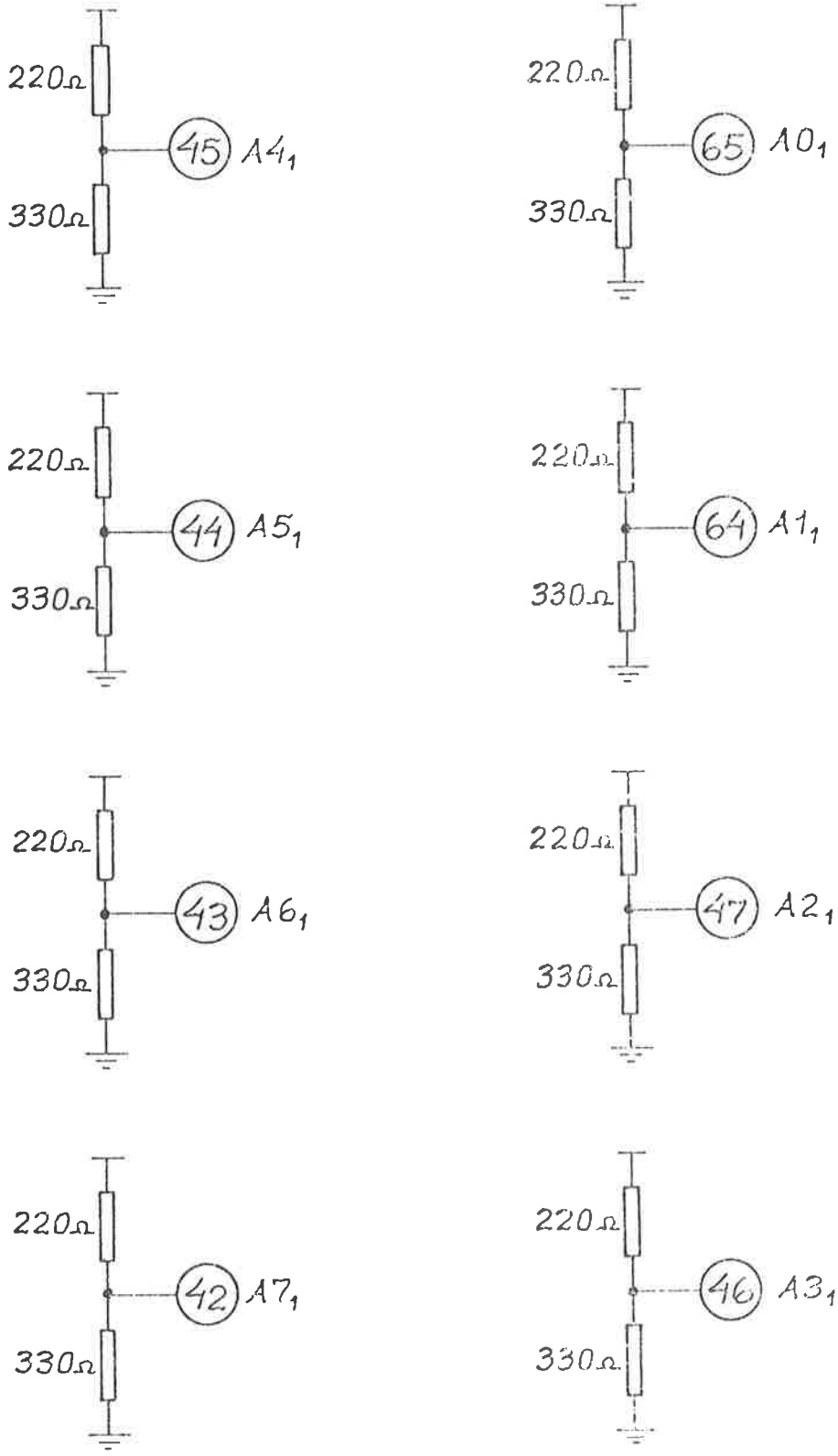

DRAWN BY Eml	Remarks	Replacement for: Date:
APPROVED BY L.B		Replaced by: Date:
DATE 4.8.75		

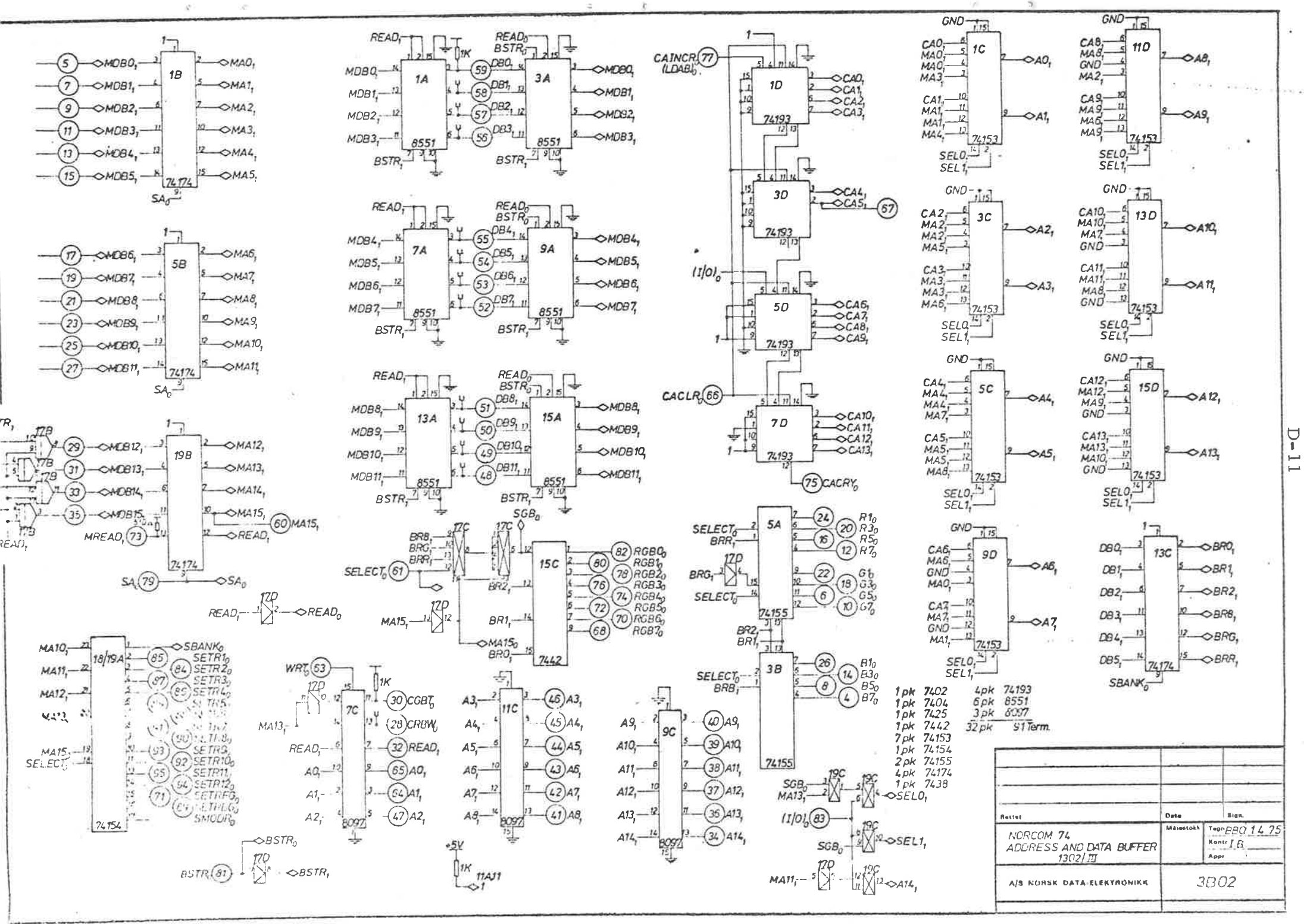

1 pk	7402	4 pk	74193
1 pk	7404	6 pk	8551
1 pk	7425	3 pk	8097
1 pk	7442	32 pk	91 Term.
7 pk	74153		
1 pk	74154		
2 pk	74155		
4 pk	74174		
1 pk	7438		

Rettet	Dato	Sign.	
NORCOM 74 ADDRESS AND DATA BUFFER 1302/III	Målestokk	Tegn BBQ 14 75 Kontr IG Appr	
A/S NORSK DATA ELEKTRONIKK		3802	

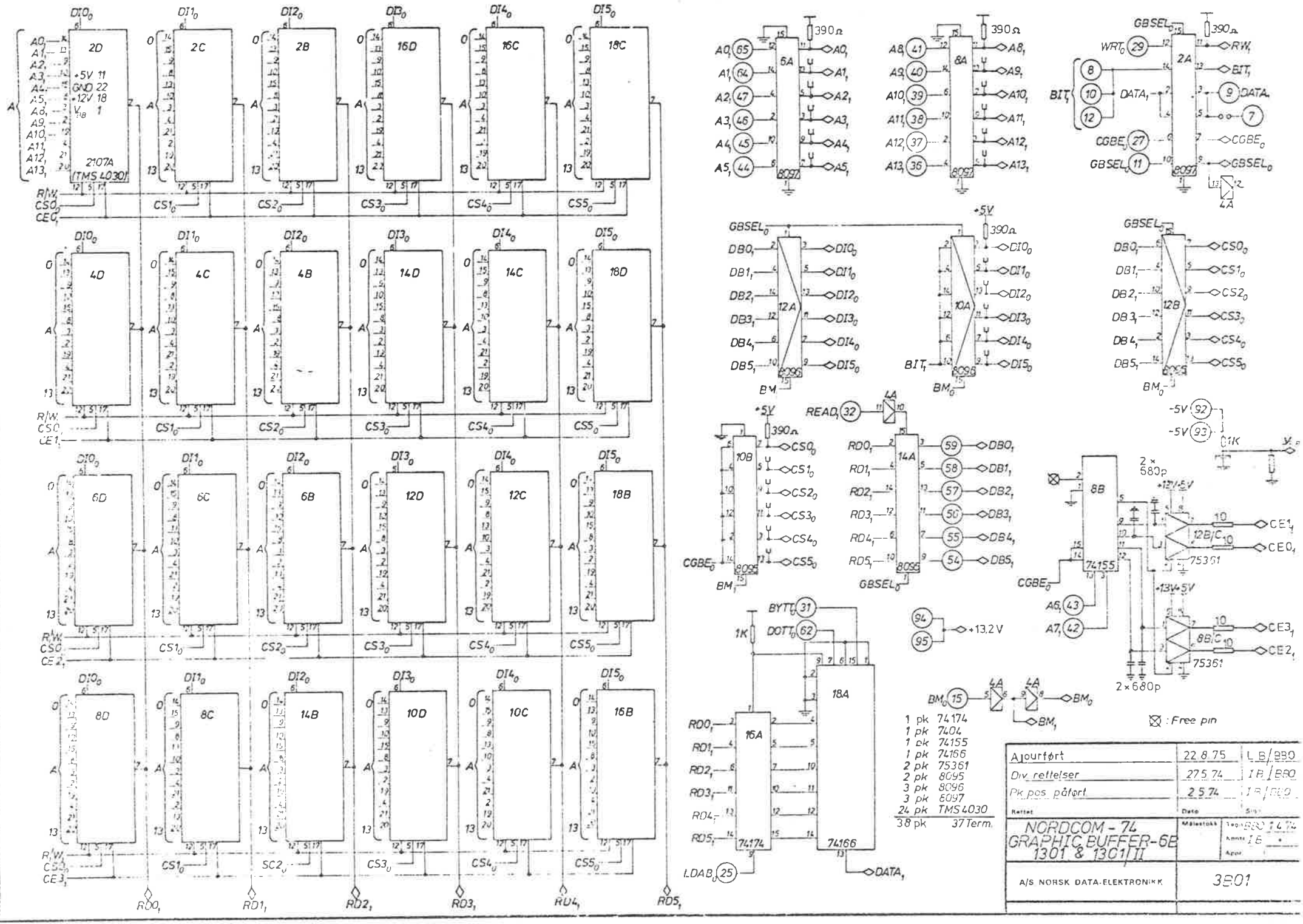

1 pk 74174
1 pk 7404
1 pk 74155
1 pk 74166
2 pk 75361
2 pk 8095
3 pk 8096
3 pk 8097
24 pk TMS4030
38 pk 37 Term.

Ajourført	22.8.75	LB/BBO
Div. rettelser	27.5.74	IB/BBO
Pk.pos. påført	2.5.74	IB/BBO
Rettet	Dato	Sign

NORDCOM - 74 GRAPHIC BUFFER-6B 1301 & 1301/II	Målestokk	Tegn BBO 14.74 Kontr IB Appr
A/S NORSK DATA-ELEKTRONIKK	3B01	

APPENDIX E

PROGRAMMING EXAMPLE

This appendix gives a programming example to show how NORDCOM operates from a user program (stand-alone program).

To use the NORDCOM in different applications, the SINTRAN III operating system includes some monitor calls and the necessary input/output drivers for operating the NORDCOM system. In addition, a powerful set of library routines are available for using NORDCOM. A description of how to use the NORDCOM system is presented in the manual "A Description of the NORDCOM System".

Example:

Assume the following NORDCOM configuration.

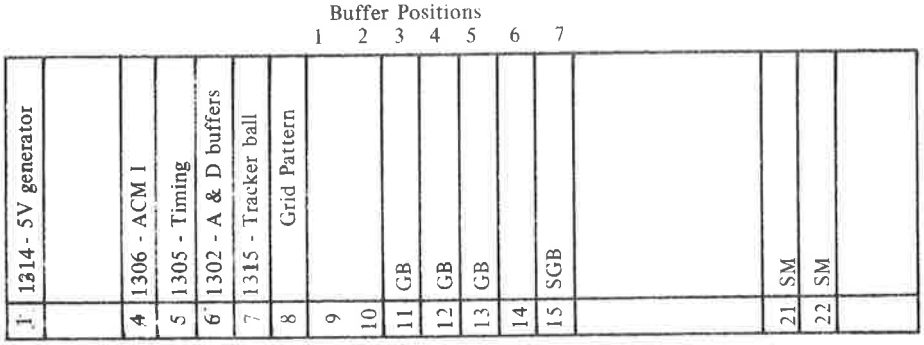

Program Functions:

1. Clears the NORDCOM system.

2. Fills characters in the SGB character generator.

3. Fills the refresh buffer in the SGB with the picture which may be displayed.

4. Fills the three GBs with the graphic picture which may be displayed.

5. Connects the two monitors to the actual pictures.

   Monitor 1:
   - Tracker ball as foreground picture with the color read and full intensity.
   - Semigraphic buffer as main picture.
   - No background picture.

Monitor 2: - Tracker ball as foreground picture with a color of green and full intensity.

- Graphic buffer system as main picture.

- Grid pattern (16 x 16) as background picture with a color of blue and half intensity.

Symbol Definitions:

MP: Main Picture
FG: Foreground Picture
BG: Background Picture
SM: Selector Module
GB: Graphic Buffer
SGB: Semigraphic Buffer

In the configuration shown above, there are two program generated picture sources (SGB and the GB system) and two hardware generated picture sources (Tracker ball and Grid Pattern).

SGB is connected to main picture number 5 and the GB system is connected to main picture number 7 (see Figure 4.1 on Page 4-2).

To access the GB system, the bank register must be set to 17 (Blue), 27 (Green) and 47 (Red).

To access SGB, the bank register must be set to 5 (see Figure 3.7 on page 3-8). The buffer access formats are described on page 3-8 and 3-9. The register formats for the selector modules are described on page 3-16.

The Program Coded in MAC Language:

```
% +++++ PROGRAM NOCOM +++++
% CLEARING OF NORDCOM

NCOM,   SAA   20        % ACM N-10 (CARD 1068) IS
        IOX   43        % CLEARED
        LDA   (1000
        IOX   43        % NORDCOM IS CLEARED
        SAA   0
        IOX   43        % THE CLEARING SIGNAL IS REMOVED

% FILLING OF THE SGB CHARACTER GENERATOR

GFIL,   LDA   (140000   % BANK REG. ADDR. FOR SGB
        JPL   SETA      % IS SET
        SAA   5         % 5 TO BANK REG., THAT IS,
        JPL   WDAT      % ACCESS TO SGB BUS NO. 5
        LDA   (20000
        JPL   SETA      % BUFFER ADDRESS ZERO IS SET
        LDX   (-1000    % ARRAY POINTER
```

```
LOOP,   LDA I TAB1,X  % TWO CHARACTERS FROM ARRAY
        COPY SA DT
        JPL   WDAT    % THE RIGHT CHAR. IS TRANSFERRED
        COPY ST DA    % TO NORDCOM
        SHA   SHR 6
        JPL   WDAT    % THE LEFT CHARACTER IS TRANS-
                      % FERRED TO NORDCOM
        JNC   LOOP    % THE NEXT TWO CHARACTERS

% FILLING OF THE REFRESH BUFFER

RFIL,   SAA   0
        JPL   SETA    % BUFFER ADDRESS ZERO IS SET(HOME)
        LDX   (-3777  % ARRAY POINTER

LOOP1,  LDA I TAB2,X  % A WORD FROM ARRAY
        JPL   WDAT    % THE WORD IS TRANSFERRED TO
                      % NORDCOM
        JNC   LOOP1   % THE NEXT WORD
        JMP   GRFIL
TAB1, ARRY1 + 1000
TAB2, ARRY2 + 3777
)FILL

% FILLING OF THE GRAPHIC BUFFERS
% GRAPHIC BUFFER BLUE COLOR

GRFIL,  LDA   (140000
        JPL   SETA    % BANK REG. ADDR. IS SET
        SAA   17      % ACCESS TO GB SYSTEM, MP NO.7
        JPL   WDAT    % BLUE COLOR
        LDA   GARR1
        STA   BADR    % ARRAY ADDRESS POINTER
        JPL   FILL    % THE GB, BLUE COLOR IS FILLED
                      % WITH THE PICTURE

% GRAPHIC BUFFER GREEN COLOR

        LDA   (140000
        JPL   SETA    % BANK REG. ADDR. IS SET
        SAA   27      % ACCESS TO GB SYSTEM, MP NO.7
        JPL   WDAT    % GREEN COLOR
        LDA   GARR2
        STA   BADR    % ARRAY ADDRESS POINTER
        JPL   FILL    % THE GB, GREEN COLOR, IS FILLED
                      % WITH THE PICTURE

% GRAPHIC BUFFER RED COLOR

        LDA   (140000
        JPL   SETA    % BANK REG. ADDRESS IS SET
        SAA   47      % ACCESS TO GB SYSTEM, MP NO.7
        JPL   WDAT    % RED COLOR
        LDA   GARR3
        STA   BADR    % ARRAY ADDRESS POINTER
        JPL   FILL    % THE GB, RED COLOR, IS FILLED
        JMP   SMSET   % WITH THE PICTURE
```

```
BADR, 0
GARR1, ARR1 + 17777
GARR2, ARR2 + 17777
GARR3, ARR3 + 17777
)FILL

% SUBROUTINES USED:

% SUBROUTINE SET ADDRESS

SETA,   IOX   41        % THE ADDRESS IS TRANSFERRED
                        % TO ACM 1068
        LDA   (14004    % THE CONTROL WORD IS SET, AND
        IOX   43        % THE ADDRESS IS TRANSFERRED
                        % TO THE NORDCOM
        IOX   42        % STATUS WORD (ACM 1068) IS READ
        BSKP  ONE30DA%  TEST STATUS
        JMP   *-2
        EXIT            % THE TRANSFER IS COMPLETED

% WRITING DATA TO NORDCOM

WDAT,   IOX   41        % DATA IS TRANSFERRED TO ACM
                        % 1068
        LDA   (4004     % CONTROL WORD (ACM 1068) IS
                        % LOADED AND
        JMP   SETA+2    % THE DATA WORD IS TRANSFERRED
                        % TO THE NORDCOM

% SUBROUTINE FILL GRAPHIC BUFFERS

FILL,   COPY  SL DB
        SAA   0
        JPL   SETA      % BUFFER ADDRESS ZERO IS SET(HOME)
        LDX   (-17777   % 37777/2

LOOP3,  LDA I BADR, X % DATA WORD FROM ARRAY
        COPY  SA DT
        JPL   WDAT      % THE RIGHT 6 DOTS ARE TRANSFERRED
                        % TO NORDCOM
        COPY  ST DA
        SHA   SHR 6
        JPL   WDAT      % THE LEFT 6 DOTS TO NORDCOM
        JNC   LOOP3     % THE NEXT DATA WORD
        COPY  SB DP     % EXIT
```

A version of the program generated pictures in this particular NORDCOM system is now generated and the next step is to connect the pictures on the internal picture busses in the NORDCOM system, to the monitors.

```
% SETTING OF THE SELECTORS
% MONITOR NO. 1

SMSET,  LDA   (142000   % ADDRESS TO SM1, SUB REG. NO.0
        JPL   SETA      % IS SET
        SAA   40
        JPL   WDAT      % SGB, MP NO. 5, IS ENABLED
        SAA   40
        JPL   WDAT      % FULL INTENSITY ON MP NO. 5
        SAA   110
        JPL   WDAT      % FG NO. 0, RED COLOR AND FULL
                        % INTENSITY, IS ENABLED.
        LDA   (200
        JPL   WDAT      % BG IS DISABLED

% MONITOR NO. 2

        LDA   (144000   % ADDRESS TO SM2, SUB REG. NO.0
        JPL   SETA      % IS SET
        LDA   (200
        JPL   WDAT      % GB SYSTEM, MP NO. 7, IS ENABLED
        LDA   (200
        JPL   WDAT      % FULL INTENSITY ON MP NO. 7
        SAA   120
        JPL   WDAT      % FG NO. 0, GREEN COLOR AND FULL
                        % INTENSITY, IS ENABLED
        SAA   41        % BG NO. 7, BLUE COLOR AND
        JPL   WDAT      % HALF INTENSITY, IS ENABLED
        WAIT            % FINISHED
)FILL

% ARRAY TO FILL CHARACTER GENERATOR (6 x 8 MATRIX)

ARRY1,    0;     0;     0;     0;     0; % SYMBOL NO.0
                                          (SPACE)
            :                           % SYMBOL NO.1
                                          (!)
            :                               :
            :                               :
          2410;  7642;  4242;  0;     0; % SYMBOL NO.
                                          41 (A)
          4274;  4274;  4274;  0;     0; % SYMBOL NO.
                                          41 (B)
            :                               :
            :                               :
            :                           % SYMBOL NO.77(←)
            :                           % USER GENERATED
            :                             SYMBOLS
            :                               :
            :                               :
            :                           % LAST SYMBOL,
                                          NO. 177
```

```
% ARRAY TO FILL REFRESH BUFFER

ARRY2,   1241   % SYMBOL A, WITH RED COLOR AND A YELLOW
                % UNDERLINE, WILL BE DISPLAYED IN POSITION
                % 0 (HOME)
          442   % SYMBOL B, WITH GREEN COLOR, WILL BE
                % DISPLAYED IN POSITION 2 ON LINE 1
          :           :
          :           :
                % THE LAST SYMBOL IS IN ADDRESS 3777(8)
                % FOR 6 x 8 MATRIX AND 5177(8) FOR 6 x 6 MATRIX

% ARRAYS TO FILL THE GRAPHIC BUFFERS

ARR1,    4343   % DOT 1, 2, 6, 9, 10, 11 ON LINE 1 WILL BE
                % DISPLAYED (COLOR SELECTED PHYSICALLY)
          :           :
          :           :
                % THE LAST 12 DOTS ARE PLACED IN ADDRESS
                % ARR1 + 17777(8)
ARR2,     :
          :
          :

ARR3,     :
          :
          :
)LINE
```

A/S NORSK DATA-ELEKTRONIKK
Lørenveien 57, Oslo 5 - Tlf. 21 73 71

COMMENT AND EVALUATION SHEET

UH200 - NORDCOM
May 1976

In order for this manual to develop to the point where it best suits your needs, we must have your comments, corrections, suggestions for additions, etc. Please write down your comments on this pre-addressed form and post it. Please be specific wherever possible.

FROM: _____

_____

_____

– we want bits of the future

A/S NORSK DATA-ELEKTRONIKK ØKERNVEIEN 145 OSLO 5 NORWAY PHONE: 21 73 71 TELEX: 18284